Low and Extra-Low voltage

PratiKa

Industrial plugs and sockets

Catalogue
2012



Schneider Electric

PratiKa plugs and sockets
Contents


PB102195


PB102196


PB102197

Presentation 4

PratiKa plugs and sockets 4

General presentation 4

Low voltage and extra-low voltage 5

Sockets with interlock switch 8
Serie Unika 10
Serie Isoblock 11

Kaedra system 12

Plugs 14

PratiKa plugs 14

Low voltage 14
Selection guide 14
Wander plugs 16
Wander plugs angled 90° 17
Wall-mounted plugs 18
Wall-mounted plugs with back box 19
Panel-mounted plugs 20
System adapters 21
Plugs with phase inverter 22

Extra-low voltage 24
Selection guide 24
Wander plugs and wall-mounted plugs 25

Sockets 26

PratiKa sockets 26

Low voltage 26
Selection guide 26
Wander sockets 28
Wall-mounted sockets 29
Wall-mounted sockets with Back box 30
Back box wall-mounted for PratiKa panel and sockets 31
Panel-mounted angled and straight sockets 32
Multiple adapters 34
Domestic panel-mounted sockets 35

Extra-low voltage 36
Selection guide 36
Wander sockets 38
Panel-mounted and wall-mounted sockets 39

With interlock switch 40
Unika - Isoblock / Selection guide 40
Unika series / Panel-mounted version 42
Unika series / Wall-mounted version 43
Unika series / Panel-mounted and wall-mounted version 44
Unika series / Installation flexibility 45
Unika series / Wall and embedded-box 46
Unika series / Modular bases 47
Isoblock series / Wall-mounted version 48
Isoblock series / Modular panels 50

Plugs and sockets for containers 52

PratiKa plugs and sockets 52

Low voltage 52
Selection guide 52
Solution for container 54



Kaedra system 56

Kaedra system 56

Offre A international / 650°C **56**
Selection guide 56
Enclosures for sockets **57**
Enclosures for modular devices with interface **58**
Enclosures for modular devices **59**
Universal enclosures **60**
Fitting system **62**
Plaques and accessories **63**

Accessories 64

Kaedra system 64

Isoblock series 66

Sockets with interlock switch **66**

Technical guide 68

General information 68

Degree of protection 71

Degree of protection IP 72

Behaviour to abnormal heat and to fire 73

Behaviour to chemical agents 74

Dimensions 76

PratiKa plugs and sockets 76

Low voltage **76**
Wander plugs and sockets 76
Plugs with phase inverter - Systems adapters 77
Wall-mounted plugs 78
Panel-mounted plugs - Wall-mounted sockets 79
Wall-mounted sockets 80
Panel-mounted sockets 81

PratiKa sockets with interlock switch 84

Unika **84**
Isoblock **86**

Kaedra System 87

Enclosures for sockets **87**
Enclosures for modular devices **88**
Interface enclosures / Universal enclosures **89**

General code index 90

Index 90

PratiKa plugs and sockets
General presentation



Additional safety is assured by sockets with electrical switch in which a mechanical lock avoid plug insertion and extraction on charge.



PratiKa offer includes the FAST patented solution: this innovative cabling system enables connection without stripping the conductor and with absolutely no screws required.

Plugs and sockets

Sockets with interlock switch

> Complete solutions:

- **Quick** to connect
- **Safe** to use
- **Functional** and **ergonomic**
- **Easy** and **intuitive**



Kaedra

Kaedra enclosures for PratiKa industrial sockets are part of a complete system of waterlight enclosures from 16 to 125 A, providing solutions for protection, control and electrical distribution for tertiary and industrial applications.

PratiKa plugs and sockets
Low voltage and extra-low voltage

PB102195



A complete range of high performance industrial plugs and sockets

The PratiKa range of industrial plugs and sockets is basically designed to suit all needs and all kinds of environments: tertiary sector, industry, building sites, workshops, agricultural sector, as well as indoor and outdoor of any kind of building.

This wide range of plugs and sockets is the result of Schneider's experience and know-how, it is a complete range, available for the 16 A, 32 A, 63 A and 125 A with degree of protection IP44 and IP67 in the wander, panel and wall versions.

These solutions are:
- fast to connect
- safe in the use
- functional and ergonomic
- easy and intuitive.

PB102239



A complete range of products to supply circuits with risks of direct and indirect contacts with live parts

The range includes 16 and 32 A versions available in different number of pole (2P and 3P).

PratiKa with FAST connection

PratiKa Fast



The **FAST** connecting system is the most innovating solution of this series which guarantees the connection without stripping the conductor, in total absence of screw.
This logo is the guarantee of the new patented connecting system of the **FAST** series.
This solution is dedicated to flexible cables both for the 16 A and 32 A.

PratiKa with SCREW connection

PratiKa Screw



The **SCREW** version simplifies the most common cabling solution, having introduced the orientation of the screws which are completely open to speed the cabling.

PratiKa plugs and sockets
Low voltage and extra-low voltage

Wall plugs and sockets

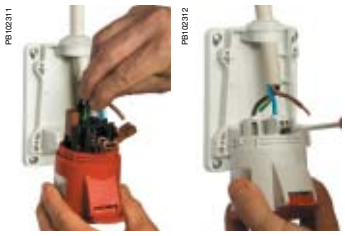

Wall installations both for plugs and sockets can now be realised with PratiKa Wall IP44 available with the FAST and the SCREW solution, 16 A and 32 A.

Robustness due to rigid cover, stainless steel screws and high level of thermoplastic material permit the use in tertiary, industry and any sector.

Complete solutions for 63 A and 125 A



The nickel-plated contacts, the stainless steel screws, and the high performing plastic materials, ensure the maximum protection even in very humid and corrosive environments.
A high performing thermoplastic material ensures the use in any aggressive environment in presence of oils and chemical agents.

Phase inverters and solutions for container



Phase inverters are designed to solve quickly and safely the problems concerning electrical connections of all rotary equipment.

These plugs and sockets have been built to ensure maximum protection and guaranteed functioning also in highly aggressive and corrosive environments.

Wander plugs angled 90°



This version allows to reduce the bulk of connection between itself and a panel sockets and limits the mechanical stresses upon the cables, due to the absence of curves.

Domestic panel sockets



A range of domestic sockets IP54 is now available presenting "shutters" (child protection) in all versions, these devices permit to avoid harmful contact with the sleeves in presence of tension.

PratiKa plugs and sockets
Low voltage and extra-low voltage

Extra-low voltage sockets





The PratiKa extra-low voltage sockets and plugs ensure the non-interchangeability by means of two reference elements:
- a guide spline
- a secondary keyway.

In accordance with the IEC 309-1 and IEC 309-2 standard.

Sockets with safety transformers





Both Unika and Isoblock series are used to power circuits with a voltage rating of 50 V maximum, in order to protect people from direct and indirect contacts, in conformity with IEC364 standards.

The units integrates the socket, the power transformer and the transformer protection from any overloading.

PratiKa plugs and sockets
Sockets with interlock switch

PB102248



A complete range in order to guarantee safety, reliability and functionality

- Unika: highly functional features and very versatile installation system.
- Isoblock: for installation in high-risk areas.

In conformity with IEC 60309 standards, all the industrial sockets have a lock or holding mechanism, which keeps the plug firmly locked in the socket, preventing it from being pulled out involontarily.
Sockets with an interlock switch have been designed to meet the safety requirements and, in particular, to prevent plug insertion or removal while the socket is under load.
Their interlocking device allows closure of the main switch and, subsequently, the power supply only when the plug is fully inserted in the socket, and when complete mechanical and electrical connection has occurred between the sleeves and pins.
Plug removal is possible only when the switch is in the "off" position.
The use of these solutions is compulsory in accordance with the regulations in force, e.g. in places where there is a risk of explosion or fire. However, in order to prevent dangerous contacts capable of causing overheating and consequently insulation deterioration or the outbreak of a fire, it is always advisable to adopt this safety measures. In this way the user has the guarantee that current can only be accessed under optimum safety conditions with the plug correctly inserted.

- Tertiary
- Industry
- Construction sites
- Agriculture
- Heavy industry

PB102249



AEO 098-30



PB102250



LunaPark-30



PB102343



t0243-30



PB102251



t0204-30



Domain of applications

PratiKa plugs and sockets
Sockets with interlock switch

PB102252



Global solution for industrial installations

Compact, unified sizes, versions with IP44 and IP65 protection, panel and wall-mounted, with or without integrated protection, all sockets provide quick solutions to the most demanding applications.

Unika series provides

Safety

Equipped with a mechanical switch, which ensures the control and local isolating of parts of the plant or utilities to permit intervention on electrical circuits or machines in total safety.
The sockets are in conformity with IEC 60309-2 and IEC 60309-4 standards.

Protection

Have fuse-blocks with isolators placed under the front protection and accessible only when the switch is open and plug removed and, thus, in the total absence of voltage.
Thanks to the fuse clips, the contact pressure on the fuses remains constant independent of installation operations, preventing excessive overheating, harmful to their functioning and duration.

Resistance

Provides guaranteed IP44 and IP65 protection against the penetration of solids and liquids, in conformity with the IEC 60529 and EN 60529 standards, while resistance to mechanical shocks is covered by IK09 protection, in conformity with EN 62262 standards.
The structure and supporting frame of the equipment completely separated from the housing and the double walls, contribute to greatly increasing the mechanical resistance.

PB102263



A complete range for heavy-duty applications

IP65 protection, IK10 shock resistance, high resistance to aggressive chemical and atmospheric agents, specifically designed for heavy-duty applications.

Isoblock series provides

High resistance

Made of special techno-polymers, provide ultra-high resistance to aggressive chemical and atmospheric agents and guarantee maximum protection even in difficult, hazardous environments.

Protection

Against the penetration of solids and liquids, in conformity with the IEC 60529 standards, while resistance to mechanical shocks is covered by IK10 protection, in conformity with EN 62262 standards.

PratiKa plugs and sockets
Sockets with interlock switch
Serie Unika

Unique because of the following:
- one standard size 103 x 225 mm for 16 and 32 A sockets
- for IP44 and IP65 versions
- versions protected by fuses, without protection, with insulation transformers and with DIN rail for modular devices
- fitted wall-mounted, used individually, in combination or in the Kaedra system.

Compact size



Unika sockets 16 - 32 A with interlock switch come in one standard size of 103 x 225 mm, which makes them the most compact on the market, guaranteeing at the same time ultra-high performance in terms of safety and functionality.

Easy to install



Unika interlocked sockets series are very easy in installation thanks to:
- the same dimension of 16 and 32 A that can be easily interchanged on the 103 x 225 holes
- possibility to separate the body from the back box to facilitate the wall fixing and the wiring
- possibility to hang the body to comfortably cable the switch or MCBs (for 63A version)
- possibility of cable entrance from the top, from the bottom or from the side of the box.

Design



The range includes functional and optimized shapes for an standingalone installation and for perfect integration with the unique Kaedra's enclosures.

The lines, the style and the shapes where conceived also on the basis of an easy manipulation and cabling.

Kaedra System and modular bases



Unika series sockets 16 and 32 A can be installed either on single enclosures or modular bases, and can be combined to form complete, totally protected banks. Also, they can be fitted on a Kaedra system socket panels designed specifically for Unika, enabling the construction of interlocked socket panels with the possibility of differential protection integrated.

Unika 63 can be easily associated to other interlocked sockets of Unika series both vertically or horizontally, possibility available also with the Kaedra system of watertight enclosures.

PratiKa plugs and sockets
Sockets with interlock switch
Serie Isoblock

Differentiated functions



■ Version with carrier for CH 10.3 x 38 cylindrical fuses in the 16 e 32 A applications and with E33 carrier for DIII fuses in the 63 A applications.
■ Version with carrier for CH 10.3 x 38 cylindrical fuses equipped with LED indicator device, which it warns of the voltage presence in each phase.
■ Version with DIN rail for installing any kind of modular equipment.

Modular panels



The cover of each individual interlocked socket can be easily removed enabling access for wiring and interconnections.

For the installation of associated interlocked sockets, modular panels are available ready-equipped with an junction box or modular enclosures.

Sockets with interlock switch



The Isoblock series of 63-125 A with thermal-magnetic (with or without earth-fault protection) is now equipped with the Compact NS160N circuit breaker, which give to the end-user lasting safety together with unsurpassed energy availability and very high electrical and technical features.

Socket combinations



Isoblock interlocked socket combinations consist of complete distribution units characterized by the high performance of the different sockets and, therefore, are intended for installation in hazardous environments.

They are easily combined with the connections devices supplied with each panel.

PratiKa plugs and sockets
Kaedra system





The most complete range of solutions for protection, control and distribution panels for tertiary and industrial applications.

The new range of Kaedra system watertight enclosures provides solutions to all equipment installation problems, such as sockets, modular protection devices, buttons and indicator devices, etc., in environments where maximum protection is needed both for people and the electrical equipment.

The expected solution for a complete, coherent system, designed for the installation of all the Schneider Electric equipment, combining safety, functionality, ergonomics and design.
- Enclosures for sockets
- Enclosures for modular devices
- Enclosures for modular devices with interface
- Interface enclosures
- Universal enclosures

Safety
Kaedra enclosures ensure maximum protection thanks to the following:
- IP65 protection
- High resistance to shocks (IK09), chemical and atmospheric agents and UV rays
- Materials and structure designed to guarantee double insulation and access only to authorized personnel.

In conformity with the IEC 670 standards for empty boxes, and IEC 439-3 standards for complete boards.

Ergonomics
The Kaedra enclosures provide ample wiring space enabling simplified cable entry and internal distribution.
The doors and transparent flap-covers enable constant and immediate control of the operating conditions while the interface areas permit rapid access to the sockets or control devices.
The standardized concept of the opening enables quick installation of all the equipment either directly or throught functional plaques.

Design
The modern and rounded shapes of the Kaedra enclosures are the result of careful studies on product design and ergonomics, and are recommended for public areas without spoiling the architectural surroundings with purely technological features.
The use of innovative colours enables them to fit in better with their surroundings while guaranteeing the principal needs of equipment visibility and control.

Enclosures for sockets



These are available in versions for 1 to 8 sockets and include new modular opening, which enable installation of all the PratiKa series socket or integration of control and indicator devices.
Those versions are also available for installing new Unika interlocked sockets and blank versions for universal sockets.

Enclosures for modular devices



These are available in versions for 2 to 72 modules and enable installation of all modular equipment up to 125 A, as well as combinations with equipment other than the modular type, thanks to the chassis and separate modular panels.

PratiKa plugs and sockets
Kaedra system

Enclosures for modular devices with interface



These are available in versions for 12, 24 and 36 modules and, thanks to the specific plaques, enable installation of other control, protection, and indicator device equipment on the panel front as well as domestic or industrial PratiKa sockets. These devices are accessible at any time maintaining the other modular equipment totally protected, that means without opening the door.

Interface enclosures



These are combinable with 2 or 3-unit modular enclosures and enable front installation of control, indicator devices and sockets. The internal volume provides convenient space for cable distribution within the enclosures.

Universal enclosures



These are available in 5 different sizes and enable the construction of control boards with non-modular equipment. These enclosures can be associated with all the Kaedra series enclosures enabling the construction of complete banks.

Association

The modular size of the Kaedra system enclosures enables them to be quickly associated both horizontally and vertically, allowing the board configuration to be adjusted according to the structural conditions of the installation environment. Furthermore, extensions can be made at any time by adjusting the panel according to the various needs.

Chassis

The Kaedra system enclosures, designed to accommodate modular devices, are equipped with an easily removable chassis to permit installation of equipment and wiring outside the board. This can be easily tourned up side down to provide wide space for incoming and outgoing wiring. It is also possible to changed the on-centre between the rails (150 mm in basic delibery version) and enabling an optimum use of the internal wiring space.

Operating details

The Kaedra enclosures have been constructed in close collaboration with the installers, enabling the integration of numerous functions designed to simplify their work. Here are some examples:
- the hinges are designed to enable enclosures to be opened without removing the cover
- the dovetail joint on the chassis and on the base permit installation of wiring collars or terminal blocks
- circuit identification labels, totally protected to ensure leggibility even after numerous operations.

PratiKa plugs
Low voltage
Selection guide

PratiKa plugs 16 - 32 A







Rated current	Poles and wires	Freq.	Rated voltage	Clock position of contact	Wander plugs FAST connect		Wander plugs SCREW connect		Wander plugs angled 90° SCREW connect	
		Hz			IP44	IP67	IP44	IP67	IP44	IP67
16 A	2P + ⏚	50/60	100-130 V AC	4 h	PKX16M413	PKX16M713	PKE16M413	PKE16M713	-	-
	3P + ⏚	50/60		4 h	PKX16M414	PKX16M714	PKE16M414	PKE16M714	-	-
	3P+N + ⏚	50/60		4 h	PKX16M415	PKX16M715	PKE16M415	PKE16M715	-	-
	2P + ⏚	50/60	200-250 V AC	6 h	PKX16M423	PKX16M723	PKE16M423	PKE16M723	81704	81754
	3P + ⏚	50/60		9 h	PKX16M424	PKX16M724	PKE16M424	PKE16M724	-	-
	3P+N + ⏚	50/60		9 h	PKX16M425	PKX16M725	PKE16M425	PKE16M725	-	-
	2P + ⏚	50/60	380-415 V AC	9 h	PKX16M433	PKX16M733	PKE16M433	PKE16M733	-	-
	3P + ⏚	50/60		6 h	PKX16M434	PKX16M734	PKE16M434	PKE16M734	81708	81758
	3P+N + ⏚	50/60		6 h	PKX16M435	PKX16M735	PKE16M435	PKE16M735	81709	81759
	3P + ⏚	50/60	480-500 V AC	7 h	PKX16M444	PKX16M744	PKE16M444	PKE16M744	-	-
	3P+N + ⏚	50/60		7 h	PKX16M445	PKX16M745	PKE16M445	PKE16M745	-	-
32 A	2P + ⏚	50/60	100-130 V AC	4 h	PKX32M413	PKX32M713	PKE32M413	PKE32M713	-	-
	3P + ⏚	50/60		4 h	PKX32M414	PKX32M714	PKE32M414	PKE32M714	-	-
	3P+N + ⏚	50/60		4 h	PKX32M415	PKX32M715	PKE32M415	PKE32M715	-	-
	2P + ⏚	50/60	200-250 V AC	6 h	PKX32M423	PKX32M723	PKE32M423	PKE32M723	81716	81766
	3P + ⏚	50/60		9 h	PKX32M424	PKX32M724	PKE32M424	PKE32M724	-	-
	3P+N + ⏚	50/60		9 h	PKX32M425	PKX32M725	PKE32M425	PKE32M725	-	-
	2P + ⏚	50/60	380-415 V AC	9 h	PKX32M433	PKX32M733	PKE32M433	PKE32M733	-	-
	3P + ⏚	50/60		6 h	PKX32M434	PKX32M734	PKE32M434	PKE32M734	81720	81770
	3P+N + ⏚	50/60		6 h	PKX32M435	PKX32M735	PKE32M435	PKE32M735	81721	81771
	3P+N + ⏚	50/60	380-440 V AC	3 h	-	PKX32M7C4	-	PKE32M7C4	-	81799
	3P + ⏚	50/60	480-500 V AC	7 h	PKX32M444	PKX32M744	PKE32M444	PKE32M744	-	-
	3P+N + ⏚	50/60		7 h	PKX32M445	PKX32M745	PKE32M445	PKE32M745	-	-
Technical data, see page					16		16		17	

PratiKa plugs 63 - 125 A





Rated current	Poles and wires	Freq.	Rated voltage	Clock position of contact	Wander plugs SCREW connect	Wall-mounted plugs SCREW connect	Panel-mounted plugs SCREW connect
		Hz			IP67	IP67	IP67
63 A	3P + ⏚	50/60	100-130 V AC	4 h	81376	81576	81876
	3P+N + ⏚	50/60		4 h	81377	81577	81877
	2P + ⏚	50/60	200-250 V AC	6 h	81378	81578	81878
	3P + ⏚	50/60		9 h	81379	81579	81879
	3P+N + ⏚	50/60		9 h	81380	81580	81880
	3P + ⏚	50/60	380-415 V AC	6 h	81382	81582	81882
	3P+N + ⏚	50/60		6 h	81383	81583	81883
	3P + ⏚	50/60	480-500 V AC	7 h	81385	81585	81885
	3P+N + ⏚	50/60		7 h	81386	81586	81886
125 A	3P + ⏚	50/60	100-130 V AC	4 h	81388	81588	81888
	3P+N + ⏚	50/60		4 h	81389	81589	81889
	2P + ⏚	50/60	200-250 V AC	6 h	81390	81590	81890
	3P + ⏚	50/60		9 h	81391	81591	81891
	3P+N + ⏚	50/60		9 h	81392	81592	81892
	3P + ⏚	50/60	380-415 V AC	6 h	81394	81594	81894
	3P+N + ⏚	50/60		6 h	81395	81595	81895
	3P + ⏚	50/60	480-500 V AC	7 h	81397	81597	81897
	3P+N + ⏚	50/60		7 h	81398	81598	81898
Technical data, see page					16	19	20











Wall-mounted plugs		Wall-mounted plugs with back box		Panel-mounted plugs		Phase inverters SCREW connect							
FAST connect	SCREW connect	SCREW connect		SCREW connect		Wander-plugs		Wander plugs angled 90°		Wall-mounted plugs		Panel-mounted plugs	
IP44	IP44	IP44	IP67	IP44	IP67	IP44	IP67	IP44	IP67	IP44	IP67	IP44	IP67
PKX16W413	PKE16W413	83501	83551	81801	83851	-	-	-	-	-	-	-	-
PKX16W414	PKE16W414	83502	83552	81802	83852	-	83914	81726	81776	83526	83576	-	83876
PKX16W415	PKE16W415	83503	83553	81803	83853	83905	83915	-	81777	83527	83577	83827	83877
PKX16W423	PKE16W423	83504	83554	81804	83854	-	-	-	-	-	-	-	-
PKX16W424	PKE16W424	83505	83555	81805	83855	83901	83911	81728	81778	83528	83578	-	83878
PKX16W425	PKE16W425	83506	83556	81806	83856	83906	-	81729	81779	83529	83579	83829	83879
PKX16W433	PKE16W433	83507	83557	81807	83857	-	-	-	-	-	-	-	-
PKX16W434	PKE16W434	83508	83558	81808	83858	83902	83912	-	81780	83530	83580	83830	83880
PKX16W435	PKE16W435	83509	83559	81809	83859	83903	83913	-	-	83531	83581	83831	83881
PKX16W444	PKE16W444	83511	83561	81811	83861	-	-	81732	81782	83532	83582	83832	83882
PKX16W445	PKE16W445	83512	83562	81812	83862	-	-	81733	81783	83533	-	83833	83883
PKX32W413	PKE32W413	83513	83563	81813	83863								
PKX32W414	PKE32W414	83514	83564	81814	83864								
PKX32W415	PKE32W415	83515	83565	81815	83865								
PKX32W423	PKE32W423	83516	83566	81816	83866								
PKX32W424	PKE32W424	83517	83567	81817	83867								
PKX32W425	PKE32W425	83518	83568	81818	83868								
PKX32W433	PKE32W433	83519	83569	81819	83869								
PKX32W434	PKE32W434	83520	83570	81820	83870								
PKX32W435	PKE32W435	83521	83571	81821	83871								
-	-	-	81599	-	83899								
PKX32W444	PKE32W444	83523	83573	81823	83873								
PKX32W445	PKE32W445	83524	83574	81824	83874								
18		19		20		23							

Learn how to define your PratiKa: industrial plugs

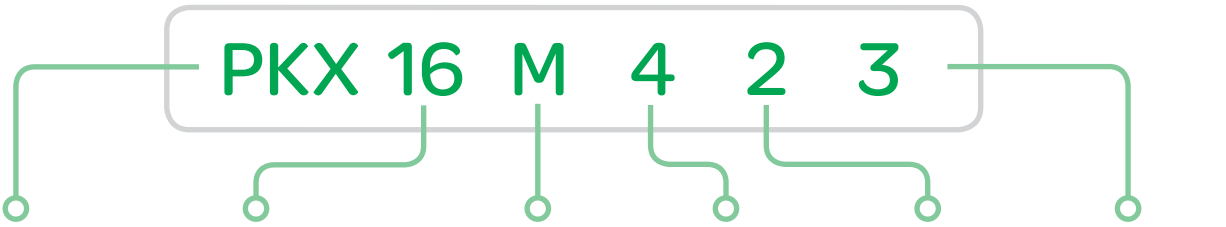

Versions
PKX = FAST plug
PKE = SCREW plug

Current (A)
16
32

Execution
M = Wander
W = Wall mounted

Protection
4 = IP44
7 = IP67

Voltage
1 = 110 V
2 = 220 V
3 = 380 V
4 = 480 V
C = For container

Poles
3 = 2P + ⏚
4 = 3P + ⏚
5 = 3P+N + ⏚

PratiKa plugs
Low voltage
Wander plugs

Technical data

			FAST connection, without screws	SCREW connection
			PB102226  PB102205	PB102227 
Main characteristics			**Designed to supply fixed or movable equipment by a flexible cable.**	
Degree of protection	According to IEC 60529	16 and 32 A	IP44	IP44
			IP67	IP67
		63 and 125 A	-	IP67
	According to EN 62262	Against external mechanical impacts	IK08	IK08
Pilot contact			-	Available in the 63 A and 125 A
Resistance to fire and abnormal heat	According to IEC 60695-2-11	Glow wire test	850°C	850°C
Materials			Housing made of self-extinguishing polymer	Housing made of self-extinguishing polymer
			Pins made of nickel-plated brass	Pins made of nickel-plated brass
			Springs and pins made of stainless steel	Springs and pins made of stainless steel
Connection terminals			Without screws and without stripping the conductor	Captive screws, completely loosened

Connection

	FAST connection, without screws		SCREW connection		
Rating	**Cable entry**	**Maximum cross section of conductors**	**Cable entry**		**Maximum cross section of conductors**
(In)	**IP44 / IP67 Fair-lead and cable clamp**	**IEC 60309-1/A1, 60309-2/A1 Stranded wire cables / flexible cables**	**IP44 / IP67 Fair-lead and cable clamp**	**IP67 Cable gland**	**Solid cables / stranded wire cables / flexible cables**
16 A	8 - 15 mm	1 to 2.5 mm²	8 - 15 mm	-	1 to 4 mm²
32 A	11.5 - 21 mm	2.5 to 6 mm²	11.5 - 21 mm	-	2.5 to 10 mm²
63 A	-	-	-	17 - 31 mm / PG36	6 to 25 mm²
125 A	-	-	-	26 - 48 mm / PG48	16 to 70 mm²

Code of wander plugs

Rating		Rated voltage											
		100 - 130 V AC			200 - 250 V AC			380 - 415 V AC			480 - 500 V AC		
Poles and wires		2P + ⏚	3P + ⏚	3P+N + ⏚	2P + ⏚	3P + ⏚	3P+N + ⏚	2P + ⏚	3P + ⏚	3P+N + ⏚	2P + ⏚	3P + ⏚	3P+N + ⏚
FAST connection, without screws													
IP44	16 A	PKX16M413	PKX16M414	PKX16M415	PKX16M423	PKX16M424	PKX16M425	PKX16M433	PKX16M434	PKX16M435	-	PKX16M444	PKX16M445
	32 A	PKX32M413	PKX32M414	PKX32M415	PKX32M423	PKX32M424	PKX32M425	PKX32M433	PKX32M434	PKX32M435	-	PKX32M444	PKX32M445
IP67	16 A	PKX16M713	PKX16M714	PKX16M715	PKX16M723	PKX16M724	PKX16M725	PKX16M733	PKX16M734	PKX16M735	-	PKX16M744	PKX16M745
	32 A	PKX32M713	PKX32M714	PKX32M715	PKX32M723	PKX32M724	PKX32M725	PKX32M733	PKX32M734	PKX32M735	-	PKX32M744	PKX32M745
SCREW connection													
IP44	16 A	PKE16M413	PKE16M414	PKE16M415	PKE16M423	PKE16M424	PKE16M425	PKE16M433	PKE16M434	PKE16M435	-	PKE16M444	PKE16M445
	32 A	PKE32M413	PKE32M414	PKE32M415	PKE32M423	PKE32M424	PKE32M425	PKE32M433	PKE32M434	PKE32M435	-	PKE32M444	PKE32M445
IP67	16 A	PKE16M713	PKE16M714	PKE16M715	PKE16M723	PKE16M724	PKE16M725	PKE16M733	PKE16M734	PKE16M735	-	PKE16M744	PKE16M745
	32 A	PKE32M713	PKE32M714	PKE32M715	PKE32M723	PKE32M724	PKE32M725	PKE32M733	PKE32M734	PKE32M735	-	PKE32M744	PKE32M745
	63 A	-	81376	81377	81378	81379	81380	-	81382	81383	-	81385	81386
	125 A	-	81388	81389	81390	81391	81392	-	81394	81395	-	81397	81398

PG149061 
PKX16M423

PG149075 
PKX16M733

PG149039 
PKE16M423

PG149053 
PKE16M733

PG149011 
81395

PratiKa plugs
Low voltage
Wander plugs angled 90°

Technical data

			Angled 90°
			PB102228 
Main characteristics			**They have the advantage of not being very thick.**
Degree of protection	According to IEC 60529	16 and 32 A	IP44
			IP67
	According to EN 62262	Against external mechanical impacts	IK08
Resistance to fire and abnormal heat	According to IEC 60695-2-11	Glow wire test	850°C
Materials			Housing made of self-extinguishing polymer
			Pins made of nickel-plated brass
			Stainless steel screw
Connection terminals			Captive screws, completely loosened

Connection

	Angled 90°		
Rating	**Cable entry**		**Maximum cross section of conductors**
(In)	**IP44 / IP67 Fair-lead**	**IP67 Cable gland**	**Solid cables / stranded wire cables / flexible cables**
16 A	8 - 15 mm	PG16 (PG21 5P)	1 to 4 mm^2
32 A	11.5 - 21 mm	PG21	2.5 to 10 mm^2

Code of wander plugs angled 90°

Rating		Rated voltage											
		100 - 130 V AC			200 - 250 V AC			380 - 415 V AC			480 - 500 V AC		
Poles and wires		**2P + ⏚**	**3P + ⏚**	**3P+N + ⏚**	**2P + ⏚**	**3P + ⏚**	**3P+N + ⏚**	**2P + ⏚**	**3P + ⏚**	**3P+N + ⏚**	**2P + ⏚**	**3P + ⏚**	**3P+N + ⏚**
IP44	16 A	-	-	-	**81704**	-	-	-	**81708**	**81709**	-	-	-
	32 A	-	-		**81716**	-	-	-	**81720**	**81721**	-		
IP67	16 A	-	-	-	**81754**	-	-	-	**81758**	**81759**	-	-	-
	32 A	-	-	-	**81766**	-	-	-	**81770**	**81771**	-	-	-

PG149017 

81704

PG149032 

81770

PratiKa plugs
Low voltage
Wall-mounted plugs

Technical data

			FAST connection, without screws	SCREW connection
			PB102233  PB102205	PB102233 
Main characteristics			**They can be installed on an appliance to enable supply by wander socket.**	
Degree of protection	According to IEC 60529	16 and 32 A	IP44	IP44
	According to EN 62262	Against external mechanical impacts	IK08	IK08
Resistance to fire and abnormal heat	According to IEC 60695-2-11	Glow wire test	750°C	750°C
Materials			Housing made of self-extinguishing polymer	Housing made of self-extinguishing polymer
			Pins screw made of nickel-plated brass	Pins screw made of nickel-plated brass
			Stainless steel	Stainless steel
Connection terminals			Without screws and without stripping the conductor	Captive screws, completely loosened

Connection

	FAST connection, without screws			SCREW connection
Rating	**Cable entry**		**Maximum cross section of conductors**	**Maximum cross section of conductors**
(In)	**Cable diameter**	**IP44 Cable entry**	**IEC 60309-1/A1, 60309-2/A1 Stranded wire cables / flexible cables**	**Solid cables / stranded wire cables / flexible cables**
16 A	21.5 mm	M25 threaded nut	1 to 2.5 mm^2	1 to 4 mm^2
32 A	21.5 mm	M25 threaded nut	2.5 to 6 mm^2	2.5 to 10 mm^2

Code of wall-mounted plugs

Rating		Rated voltage											
		100 - 130 V AC			200 - 250 V AC			380 - 415 V AC			480 - 500 V AC		
Poles and wires		**2P + ⏚**	**3P + ⏚**	**3P+N + ⏚**	**2P + ⏚**	**3P + ⏚**	**3P+N + ⏚**	**2P + ⏚**	**3P + ⏚**	**3P+N + ⏚**	**2P + ⏚**	**3P + ⏚**	**3P+N + ⏚**
FAST connection, without screws													
IP44	16 A	**PKX16W413**	**PKX16W414**	**PKX16W415**	**PKX16W423**	**PKX16W424**	**PKX16W425**	**PKX16W433**	**PKX16W434**	**PKX16W435**	-	**PKX16W444**	**PKX16W445**
	32 A	**PKX32W413**	**PKX32W414**	**PKX32W415**	**PKX32W423**	**PKX32W424**	**PKX32W425**	**PKX32W433**	**PKX32W434**	**PKX32W435**	-	**PKX32W444**	**PKX32W445**
SCREW connection													
IP44	16 A	**PKE16W413**	**PKE16W414**	**PKE16W415**	**PKE16W423**	**PKE16W424**	**PKE16W425**	**PKE16W433**	**PKE16W434**	**PKE16W435**	-	**PKE16W444**	**PKE16W445**
	32 A	**PKE32W413**	**PKE32W414**	**PKE32W415**	**PKE32W423**	**PKE32W424**	**PKE32W425**	**PKE32W433**	**PKE32W434**	**PKE32W435**	-	**PKE32W444**	**PKE32W445**

PB102307 

PKX16W435

PB102253 

PKE16W435

PratiKa plugs
Low voltage
Wall-mounted plugs with back box

Technical data

			SCREW connection
			PB102226 
Main characteristics			**They can be installed on an appliance to enable supply by wander socket.**
Degree of protection	According to IEC 60529	16 and 32 A	IP44
			IP67
		63 and 125 A	IP67
	According to EN 62262	Against external mechanical impacts	IK08
Pilot contact			Available in the 63 A and 125 A
Resistance to fire and abnormal heat	According to IEC 60695-2-11	Glow wire test	850°C
Materials			Housing made of self-extinguishing polymer
			Pins made of nickel-plated brass
			Stainless steel screws
Connection terminals			Captive screws, completely loosened

Connection

	SCREW connection		
Rating	**Cable entry**		**Maximum cross section of conductors**
(In)	**IP44 Fair-lead**	**IP67 Cable gland**	**Solid and stranded wire flexible cabless**
16 A	8 - 15 mm	PG16 (PG21 5P)	1 to 4 mm^2
32 A	11.5 - 21 mm	PG21	2.5 to 10 mm^2
63 A	-	PG36	6 to 25 mm^2
125 A	-	PG48	16 to 70 mm^2

Code of wall-mounted plugs

Rating		**Rated voltage**											
		100 - 130 V AC			**200 - 250 V AC**			**380 - 415 V AC**			**480 - 500 V AC**		
Poles and wires		**2P + ⏚**	**3P + ⏚**	**3P+N + ⏚**	**2P + ⏚**	**3P + ⏚**	**3P+N + ⏚**	**2P + ⏚**	**3P + ⏚**	**3P+N + ⏚**	**2P + ⏚**	**3P + ⏚**	**3P+N + ⏚**
SCREW connection													
IP44	16 A	**83501**	**83502**	**83503**	**83504**	**83505**	**83506**	**83507**	**83508**	**83509**	**-**	**83511**	**83512**
	32 A	**83513**	**83514**	**83515**	**83516**	**83517**	**83518**	**83519**	**83520**	**83521**	**-**	**83523**	**83524**
IP67	16 A	**83551**	**83552**	**83553**	**83554**	**83555**	**83556**	**83557**	**83558**	**83559**	**-**	**83561**	**83562**
	32 A	**83563**	**83564**	**83565**	**83566**	**83567**	**83568**	**83569**	**83570**	**83571**	**-**	**83573**	**83574**
	63 A	**-**	**81576**	**81577**	**81578**	**81579**	**81580**	**-**	**81582**	**81583**	**-**	**81585**	**81586**
	125 A	**-**	**81588**	**81589**	**81590**	**81591**	**81592**	**-**	**81594**	**81595**	**-**	**81597**	**81598**

PG149101 

83504

PG149106 

83571

PratiKa plugs
Low voltage
Panel-mounted plugs

Technical data

			Straight SCREW connection	Angled SCREW connection
			PB102304 	PB102230 
Main characteristics			**They can be installed on an appliance to enable supply by wander socket.**	
Degree of protection	According to IEC 60529	16 and 32 A	-	IP44
			-	IP67
		63 and 125 A	IP67	-
	According to EN 62262	Against external mechanical impacts	IK08	IK08
Pilot contact			Available in the 63 A and 125 A	-
Resistance to fire and abnormal heat	According to IEC 60695-2-11	Glow wire test	850°C	850°C
Materials			Housing made of self-extinguishing polymer	Housing made of self-extinguishing polymer
			Pins made of nickel-plated brass	Pins made of nickel-plated brass
			-	Stainless steal screws
Connection terminals			-	Captive screws, completely loosened
Flange dimensions	16 A	2P + ⏚	-	65 x 85 mm
		3P + ⏚	-	
		3P+N + ⏚	-	90 x 100 mm
	32 A	2P + ⏚	-	
		3P + ⏚	-	
		3P+N + ⏚	-	

Connection

	Straight SCREW connection	Angled SCREW connection
Rating	**Maximum cross section of conductors**	
(In)	**Solid and stranded wire flexible cables**	
16 A	-	1 to 4 mm²
32 A	-	2.5 to 10 mm²
63 A	6 to 25 mm²	-
125 A	16 to 70 mm²	-

***Note**: for a correct use of the IP67-63 A, a minimum clearance of 105 mm is required for the movement of hinged cover (see details at "Retaining means for IP67 panel mounted plugs" on the dimensions page).*

Code of panel-mounted plugs

Rating		Rated voltage											
		100 - 130 V AC			200 - 250 V AC			380 - 415 V AC			480 - 500 V AC		
Poles and wires		2P + ⏚	3P + ⏚	3P+N + ⏚	2P + ⏚	3P + ⏚	3P+N + ⏚	2P + ⏚	3P + ⏚	3P+N + ⏚	2P + ⏚	3P + ⏚	3P+N + ⏚
Straight SCREW connection													
IP67	63 A	-	**81876**	**81877**	**81878**	**81879**	**81880**	-	**81882**	**81883**	-	**81885**	**81886**
	125 A	-	**81888**	**81889**	**81890**	**81891**	**81892**	-	**81894**	**81895**	-	**81897**	**81898**
Angled SCREW connection													
IP44	16 A	**81801**	**81802**	**81803**	**81804**	**81805**	**81806**	**81807**	**81808**	**81809**	-	**81811**	**81812**
	32 A	**81813**	**81814**	**81815**	**81816**	**81817**	**81818**	**81819**	**81820**	**81821**	-	**81823**	**81824**
IP67	16 A	**83851**	**83852**	**83853**	**83854**	**83855**	**83856**	**83857**	**83858**	**83859**	-	**83861**	**83862**
	32 A	**83863**	**83864**	**83865**	**83866**	**83867**	**83868**	**83869**	**83870**	**83871**	-	**83873**	**83874**

Caps to cover plugs with IP44 and IP67

Rating		Code		
Poles and wires		2P + ⏚	3P + ⏚	3P+N + ⏚
IP67	16 A	**83933**	**93934**	**83935**
	32 A	**83936**	**83936**	**83937**

PG149061 
81885

PG149075 
81895

PG149075 
81804

PG149075 
83871

PG149075 
83934

PratiKa plugs
Low voltage
System adapters

Technical data

			System adapters
			PB102233 
Main characteristics			**They enable the conversion of an industrial plug system into a domestic one. They can be used for temporary situations only and in certain industrial environments where there is no danger of explosions or fire.**
Degree of protection	According to IEC 60529		IP20
	According to EN 62262	Against external mechanical impacts	IK08
Resistance to fire and abnormal heat	According to IEC 60695-2-11	Glow wire test	850°C
Conceived in conformity with standards			EN 50250
			IEC 60309-1, IEC 60309-2 and IEC 60309-4
Materials			Housing made of self-extinguishing polymer
			Pins made of nickel-plated brass
			Stainless steel screws

Code of System Adapters

Rating	Rated voltage			
	200 - 250 V AC			
Industrial plug side - Current and Poles	**2P + ⏚**			
16 A	**PKZA201**	**PKZA202**	**PKZA203**	**PKZA204**
Socket side - Number and type	1 socket - 10/16 A	2 sockets - 10/16 A	1 socket - 16 A	1 socket - 10/16 A
Standard	Italy		Germany	France

***Note**: the English, Swiss and Italian (dual - use) Standards are available on demand.*

PB102182 

PKZA201

PB102183 

PKZA202

PB102184 

PKZA203

PB102185 

PKZA204

PratiKa plugs
Low voltage
Plugs with phase inverter

The PratiKa plugs with phase inverters provide a safe, rapid solution to electrical connection problems in all rotary machines.
In fact, they permit a rapid inversion of the positions of the two pins and the phase order and, subsequently, the machine rotation direction, without having to open the plug and act on the connections.
This is achieved by simply pressing with a screwdriver on the specific area with a 180° rotation of the contact-gate block clockwise or counter-clockwise, until total inversion of the phases is obtained.

Solution for rapid inversion of electric motor rotation

The range includes different models:
- wander plugs,
- wander plugs angled 90°,
- wall-mounting plugs,
- panel-mounting plugs.

Technical data

	SCREW connection
	PB102232  PB102231 
Main characteristics	
Degree of protection According to IEC 60529	IP44
	IP67
Resistance to fire and abnormal heat According to IEC 60695-2-11 Glow wire test	850°C
Operating frequency	50/60 Hz
Materials	Housing made of self-extinguishing polymer
	Pins made of nickel-plated brass
	Stainless steel screws
Connection terminals	Captive screws, completely loosened

Connection

	SCREW connection		
Rating	**Cable entry**		**Maximum cross section of conductors**
(In)	**IP44 / IP67 Fair-lead**	**IP67 Cable gland**	**Solid and stranded wire flexible cables**
16 A	8 - 15 mm	PG16 (PG21 5P)	1 to 4 mm^2

PratiKa plugs
Low voltage
Plugs with phase inverter

PG148074



83902

PG148082



83912

Code of wander plugs with phase inverter

Rating	Rated voltage							
	100 - 130 V AC		200 - 250 V AC		380 - 415 V AC		480 - 500 V AC	
Poles and wires	3P + ⏚	3P+N + ⏚	3P + ⏚	3P+N + ⏚	3P + ⏚	3P+N + ⏚	3P + ⏚	3P+N + ⏚
IP44 16 A	-	83905	83901	83906	83902	83903	-	-
IP67 16 A	83914	83915	83911	-	83912	83913	-	-

PG149032



81780

Code of wander plugs angled 90° with phase inverter

Rating	Rated voltage							
	100 - 130 V AC		200 - 250 V AC		380 - 415 V AC		480 - 500 V AC	
Poles and wires	3P + ⏚	3P+N + ⏚	3P + ⏚	3P+N + ⏚	3P + ⏚	3P+N + ⏚	3P + ⏚	3P+N + ⏚
IP44 16 A	81726	-	81728	81729	-	-	81732	81733
IP67 16 A	81776	81777	81778	81779	81780	-	81782	81783

PG149106



83581

Code of wall-mounted plugs with phase inverter

Rating	Rated voltage							
	100 - 130 V AC		200 - 250 V AC		380 - 415 V AC		480 - 500 V AC	
Poles and wires	3P + ⏚	3P+N + ⏚	3P + ⏚	3P+N + ⏚	3P + ⏚	3P+N + ⏚	3P + ⏚	3P+N + ⏚
IP44 16 A	83526	83527	83528	83529	83530	83531	83532	83533
IP67 16 A	83576	83577	83578	83579	83580	83581	83582	-

PG149110



83880

Code of panel-mounted plugs with phase inverter

Rating	Rated voltage							
	100 - 130 V AC		200 - 250 V AC		380 - 415 V AC		480 - 500 V AC	
Poles and wires	3P + ⏚	3P+N + ⏚	3P + ⏚	3P+N + ⏚	3P + ⏚	3P+N + ⏚	3P + ⏚	3P+N + ⏚
IP44 16 A	-	83827	-	83829	83830	83831	83832	83833
IP67 16 A	83876	83877	83878	83879	83880	83881	83882	83883

PG148088



83934

Caps to cover plugs with IP44 and IP67

Rating	Code	
Poles and wires	3P + ⏚	3P+N + ⏚
IP67 16 A	83934	83935

PratiKa plugs
Extra-low voltage
Selection guide

PratiKa plugs 16 - 32 A





Rated current	Poles and wires	Freq.	Rated voltage	Clock position of secondary keyway	Wander plugs		Wall-mounted plugs
		Hz			IP44	IP67	IP44
16 A	2P	50/60	20-25 V AC	s.r.	82301	82351	82501
	3P	50/60		s.r.	82302	82352	82502
	2P	50/60	40-50 V AC	12 h	82303	82353	82503
	3P	50/60		12 h	82304	82354	82504
	2P	100/200	20-25 V AC / 40-50 V AC	4 h	82305	82355	82505
	3P	100/200		4 h	82306	82356	82506
	2P	401/500		11 h	82311	82361	82511
	3P	401/500		11 h	82312	82362	82512
	2P	⎓	20-25 V AC / 40-50 V AC	10 h	82313	82363	82513
32 A	2P	50/60	20-25 V AC	s.r.	82315	82365	82515
	3P	50/60		s.r.	82316	82366	82516
	2P	50/60	40-50 V AC	12 h	82317	82367	82517
	3P	50/60		12 h	82318	82368	82518
	2P	100/200	20-25 V AC / 40-50 V AC	4 h	82319	82369	82519
	3P	100/200		4 h	82320	82370	82520
	2P	401/500		11 h	82325	82375	82525
	3P	401/500		11 h	82326	82376	82526
	2P	⎓	20-25 V AC / 40-50 V AC	10 h	82327	82377	82527
Technical data, see page					25		

PratiKa plugs
Extra-low voltage
Wander plugs and wall-mounted plugs

Technical data

			Wander plugs	Wall-mounted plugs
			PB102200 	PB102242 
Main characteristics			**Installations and wander sockets can be powered by a flexible cable.**	**They can be wall-mounted to supply appliances with wander plugs.**
Degree of protection	According to IEC 60529	16 and 32 A	IP44	IP44
			IP67	IP67
	According to EN 62262	Against external mechanical impacts	IK08	IK08
Resistance to fire and abnormal heat	According to IEC 60695-2-11	Glow wire test	850°C	850°C
Materials			Housing made of self-extinguishing polymer	Housing made of self-extinguishing polymer
			Pins made of nickel-plated brass	Pins made of nickel-plated brass
			Stainless steel screw	Stainless steel screw
Connection terminals			Captive screws, completely loosened	Captive screws, completely loosened

Connection

	Wander plugs and wall-mounted plugs		
Rating	**Cable entry**		**Maximum cross section of conductors**
(In)	**IP44 / IP67 Fair-lead**	**IP67 Cable gland**	**Solid and stranded wire flexible cables**
16 A	6 - 23 mm	PG21	4 to 10 mm²
32 A	6 - 23 mm	PG21	4 to 10 mm²

Code of wander plugs

Rating		Rated voltage									
		20-25 V 50/60 Hz		40-50 V 50/60 Hz		20-25 V / 40-50 V 100-200 Hz		401-500 Hz		20-25 V / 40-50 V ⎓	
Poles and wires		**2P**	**3P**	**2P**	**3P**	**2P**	**3P**	**2P**	**3P**	**2P**	**3P**
IP44	16 A	**82301**	**82302**	**82303**	**82304**	**82305**	**82306**	**82311**	**82312**	**82313**	**-**
	32 A	**82315**	**82316**	**82317**	**82318**	**82319**	**82320**	**82325**	**82326**	**82327**	**-**
IP67	16 A	**82351**	**82352**	**82353**	**82354**	**82355**	**82356**	**82361**	**82362**	**82363**	**-**
	32 A	**82365**	**82366**	**82367**	**82368**	**82369**	**82370**	**82375**	**82376**	**82377**	**-**

Code of wall-mounted plugs

Rating		Rated voltage									
		20-25 V 50/60 Hz		40-50 V 50/60 Hz		20-25 V / 40-50 V 100-200 Hz		401-500 Hz		20-25 V / 40-50 V ⎓	
Poles and wires		**2P**	**3P**	**2P**	**3P**	**2P**	**3P**	**2P**	**3P**	**2P**	**3P**
IP44	16 A	**82501**	**82502**	**82503**	**82504**	**82505**	**82506**	**82511**	**82512**	**82513**	**-**
	32 A	**82515**	**82516**	**82517**	**82518**	**82519**	**82520**	**82525**	**82526**	**82527**	**-**

PG149088 
82301

PG149080 
82368

PG149112 
82501

PratiKa sockets
Low voltage
Selection guide

PratiKa sockets 16 - 32 A








Rated current	Poles and wires	Freq.	Rated voltage	Clock position of contact	Wander sockets FAST connect		Panel mounted sockets Angled FAST connect		Straight FAST connect	
		Hz			IP44	IP67	IP44	IP67	IP44	IP67
16 A	2P + ⏚	50/60	100-130 V AC	4 h	PKY16M413	PKY16M713	PKY16F413	PKY16F713	PKY16G413	PKY16G713
	3P + ⏚	50/60		4 h	PKY16M414	PKY16M714	PKY16F414	PKY16F714	PKY16G414	PKY16G714
	3P+N + ⏚	50/60		4 h	PKY16M415	PKY16M715	PKY16F415	PKY16F715	PKY16G415	PKY16G715
	2P + ⏚	50/60	200-250 V AC	6 h	PKY16M423	PKY16M723	PKY16F423	PKY16F723	PKY16G423	PKY16G723
	3P + ⏚	50/60		9 h	PKY16M424	PKY16M724	PKY16F424	PKY16F724	PKY16G424	PKY16G724
	3P+N + ⏚	50/60		9 h	PKY16M425	PKY16M725	PKY16F425	PKY16F725	PKY16G425	PKY16G725
	2P + ⏚	50/60	380-415 V AC	9 h	PKY16M433	PKY16M733	PKY16F433	PKY16F733	PKY16G433	PKY16G733
	3P + ⏚	50/60		6 h	PKY16M434	PKY16M734	PKY16F434	PKY16F734	PKY16G434	PKY16G734
	3P+N + ⏚	50/60		6 h	PKY16M435	PKY16M735	PKY16F435	PKY16F735	PKY16G435	PKY16G735
	3P + ⏚	50/60	480-500 V AC	7 h	PKY16M444	PKY16M744	PKY16F444	PKY16F744	PKY16G444	PKY16G744
	3P+N + ⏚	50/60		7 h	PKY16M445	PKY16M745	PKY16F445	PKY16F745	PKY16G445	PKY16G745
32 A	2P + ⏚	50/60	100-130 V AC	4 h	PKY32M413	PKY32M713	PKY32F413	PKY32F713	PKY32G413	PKY32G713
	3P + ⏚	50/60		4 h	PKY32M414	PKY32M714	PKY32F414	PKY32F714	PKY32G414	PKY32G714
	3P+N + ⏚	50/60		4 h	PKY32M415	PKY32M715	PKY32F415	PKY32F715	PKY32G415	PKY32G715
	2P + ⏚	50/60	200-250 V AC	6 h	PKY32M423	PKY32M723	PKY32F423	PKY32F723	PKY32G423	PKY32G723
	3P + ⏚	50/60		9 h	PKY32M424	PKY32M724	PKY32F424	PKY32F724	PKY32G424	PKY32G724
	3P+N + ⏚	50/60		9 h	PKY32M425	PKY32M725	PKY32F425	PKY32F725	PKY32G425	PKY32G725
	2P + ⏚	50/60	380-415 V AC	9 h	PKY32M433	PKY32M733	PKY32F433	PKY32F733	PKY32G433	PKY32G733
	3P + ⏚	50/60		6 h	PKY32M434	PKY32M734	PKY32F434	PKY32F734	PKY32G434	PKY32G734
	3P+N + ⏚	50/60		6 h	PKY32M435	PKY32M735	PKY32F435	PKY32F735	PKY32G435	PKY32G735
	3P+N + ⏚	50/60	380-440 V AC	3 h	-	PKY32M7C4	-	PKY32F7C4	-	PKY32G7C4
	3P + ⏚	50/60	480-500 V AC	7 h	PKY32M444	PKY32M744	PKY32F444	PKY32F744	PKY32G444	PKY32G744
	3P+N + ⏚	50/60		7 h	PKY32M445	PKY32M745	PKY32F445	PKY32F745	PKY32G445	PKY32G745
Technical data, see page					28		32			

PratiKa sockets 63 - 125 A






Rated current	Poles and wires	Freq.	Rated voltage	Clock position of contact	Wander sockets SCREW connect	Wall-mounted sockets Angled SCREW connect	Straight SCREW connect	With back box SCREW connect
		Hz			IP67	IP67	IP67	IP67
63 A	3P + ⏚	50/60	100-130 V AC	4 h	81476	81276	81676	81176
	3P+N + ⏚	50/60		4 h	81477	81277	81677	81177
	2P + ⏚	50/60	200-250 V AC	6 h	81478	81278	81678	81178
	3P + ⏚	50/60		9 h	81479	81279	81679	81179
	3P+N + ⏚	50/60		9 h	81480	81280	81680	81180
	3P + ⏚	50/60	380-415 V AC	6 h	81482	81282	81682	81182
	3P+N + ⏚	50/60		6 h	81483	81283	81683	81183
	3P + ⏚	50/60	480-500 V AC	7 h	81485	81285	81685	81185
	3P+N + ⏚	50/60		7 h	81486	81286	81686	81186
125 A	3P + ⏚	50/60	100-130 V AC	4 h	81488	81288	81688	81188
	3P+N + ⏚	50/60		4 h	81489	81289	81689	81189
	2P + ⏚	50/60	200-250 V AC	6 h	81490	81290	81690	81190
	3P + ⏚	50/60		9 h	81491	81291	81691	81191
	3P+N + ⏚	50/60		9 h	81492	81292	81692	81192
	3P + ⏚	50/60	380-415 V AC	6 h	81494	81294	81694	81194
	3P+N + ⏚	50/60		6 h	81495	81295	81695	81195
	3P + ⏚	50/60	480-500 V AC	7 h	81497	81297	81697	81197
	3P+N + ⏚	50/60		7 h	81498	81298	81698	81198
Technical data, see page					28	29	33	30












Wander sockets		Panel mounted sockets				Wall-mounted sockets				
		Angled		Straight		FAST connect			With back box	
SCREW connect		SCREW connect		SCREW connect			SCREW connect		SCREW connect	
IP44	IP67	IP44	IP67	IP44	IP67	IP44	IP44	IP67	IP44	IP67
PKF16M413	PKF16M713	PKF16F413	PKF16F713	PKF16G413	PKF16G713	PKY16W413	PKF16W413	PKF16W713	83101	83151
PKF16M414	PKF16M714	PKF16F414	PKF16F714	PKF16G414	PKF16G714	PKY16W414	PKF16W414	PKF16W714	83102	83152
PKF16M415	PKF16M715	PKF16F415	PKF16F715	PKF16G415	PKF16G715	PKY16W415	PKF16W415	PKF16W715	83103	83153
PKF16M423	PKF16M723	PKF16F423	PKF16F723	PKF16G423	PKF16G723	PKY16W423	PKF16W423	PKF16W723	83104	83154
PKF16M424	PKF16M724	PKF16F424	PKF16F724	PKF16G424	PKF16G724	PKY16W424	PKF16W424	PKF16W724	83105	83155
PKF16M425	PKF16M725	PKF16F425	PKF16F725	PKF16G425	PKF16G725	PKY16W425	PKF16W425	PKF16W725	83106	83156
PKF16M433	PKF16M733	PKF16F433	PKF16F733	PKF16G433	PKF16G733	PKY16W433	PKF16W433	PKF16W733	83107	83157
PKF16M434	PKF16M734	PKF16F434	PKF16F734	PKF16G434	PKF16G734	PKY16W434	PKF16W434	PKF16W734	83108	83158
PKF16M435	PKF16M735	PKF16F435	PKF16F735	PKF16G435	PKF16G735	PKY16W435	PKF16W435	PKF16W735	83109	83159
PKF16M444	PKF16M744	PKF16F444	PKF16F744	PKF16G444	PKF16G744	PKY16W444	PKF16W444	PKF16W744	83111	83161
PKF16M445	PKF16M745	PKF16F445	PKF16F745	PKF16G445	PKF16G745	PKY16W445	PKF16W445	PKF16W745	83112	83162
PKF32M413	PKF32M713	PKF32F413	PKF32F713	PKF32G413	PKF32G713	PKY32W413	PKF32W413	PKF32W713	83113	83163
PKF32M414	PKF32M714	PKF32F414	PKF32F714	PKF32G414	PKF32G714	PKY32W414	PKF32W414	PKF32W714	83114	83164
PKF32M415	PKF32M715	PKF32F415	PKF32F715	PKF32G415	PKF32G715	PKY32W415	PKF32W415	PKF32W715	83115	83165
PKF32M423	PKF32M723	PKF32F423	PKF32F723	PKF32G423	PKF32G723	PKY32W423	PKF32W423	PKF32W723	83116	83166
PKF32M424	PKF32M724	PKF32F424	PKF32F724	PKF32G424	PKF32G724	PKY32W424	PKF32W424	PKF32W724	83117	83167
PKF32M425	PKF32M725	PKF32F425	PKF32F725	PKF32G425	PKF32G725	PKY32W425	PKF32W425	PKF32W725	83118	83168
PKF32M433	PKF32M733	PKF32F433	PKF32F733	PKF32G433	PKF32G733	PKY32W433	PKF32W433	PKF32W733	83119	83169
PKF32M434	PKF32M734	PKF32F434	PKF32F734	PKF32G434	PKF32G734	PKY32W434	PKF32W434	PKF32W734	83120	83170
PKF32M435	PKF32M735	PKF32F435	PKF32F735	PKF32G435	PKF32G735	PKY32W435	PKF32W435	PKF32W735	83121	83171
-	PKF32M7C4	-	PKF32F7C4	-	PKF32G7C4	-	-	PKF32W7C4	-	81199
PKF32M444	PKF32M744	PKF32F444	PKF32F744	PKF32G444	PKF32G744	PKY32W444	PKF32W444	PKF32W744	83123	83173
PKF32M445	PKF32M745	PKF32F445	PKF32F745	PKF32G445	PKF32G745	PKY32W445	PKF32W445	PKF32W745	83124	83174
28		33				29			30	

PratiKa sockets 10 - 16 A





Rated current	Poles and wires	Freq.	Rated voltage	Type	Domestic sockets 50 x 50			Domestic sockets 65 x 85			
					Code grey	Code blue	Code black	Code grey		Code blue	Code black
		Hz		Standard	IP54	IP54	IP54	IP54	IP65	IP54	IP54
10 - 16 A	2P + ⏚	50/60	200-250 V AC	Italy	-	-	-	-	81139	-	-
					-	-	-	-	81146	-	-
				French	PKN51G	PKN51B	PKN51N	PKN61G	81140	PKN61B	PKN61N
					PKN52G	PKN52B	PKN52N	PKN62G	-	PKN62B	PKN62N
				Germay	PKS51G	PKS51B	PKS51N	PKS61G	81141	PKS61B	PKS61N
					PKS52G	PKS52B	PKS52N	PKS62G	-	PKS62B	PKS62N
				England	-	-	-	-	81144	-	-
				Switzerland	-	-	-	-	81145	-	-
Description											
Support with 1 adapter RJ45 Infra+ (50/60 Hz)					-	-	-	-	81142	-	-
Support with 2 adapters RJ45 Infra+ (50/60 Hz)					-	-	-	-	81143	-	-
Technical data, see page					35						

Learn how to define your PratiKa : industrial sockets

PKY 16 M 4 2 3

Versions
PKY = FAST socket
PKF = SCREW socket

Current (A)
16
32

Execution
M = Wander
F = Flush angled (panel mounted)
G = Flush straight (panel mounted)
W = Wall mounted

Protection
4 = IP44
7 = IP67

Voltage
1 = 110 V
2 = 220 V
3 = 380 V
4 = 480 V
C = For container

Poles
3 = 2P + ⏚
4 = 3P + ⏚
5 = 3P+N + ⏚

PratiKa sockets
Low voltage
Wander sockets

Technical data

			FAST connection, without screws	SCREW connection
			PB102199  PB102205	PB102234 
Main characteristics			**Designed to supply fixed or movable equipment by a flexible cable.**	
Degree of protection	According to IEC 60529	16 and 32 A	IP44	IP44
			IP67	IP67
		63 and 125 A	-	IP67
	According to EN 62262	Against external mechanical impacts	IK08	IK08
Pilot contact			-	Available in the 63 A and 125 A
Resistance to fire and abnormal heat	According to IEC 60695-2-11	Glow wire test	850°C	850°C
Materials			Housing made of self-extinguishing polymer	Housing made of self-extinguishing polymer
			Sleeves made of brass	■ Sleeves made of brass for PratiKa series ■ Sleeves made of nickel-plated brass for PratiKa series
			Springs and pins made of stainless steel	Springs and pins made of stainless steel
Connection terminals			Without screws and without stripping the conductor	Captive screws, completely loosened

Connection

	FAST connection, without screws		SCREW connection		
Rating	**Cable entry**	**Maximum cross section of conductors**	**Cable entry**		**Maximum cross section of conductors**
(In)	**IP44 / IP67 Fair-lead and cable clamp**	**IEC 60309-1/A1, 60309-2/A1 Stranded wire cables / flexible cables**	**IP44 / IP67 Fair-lead and cable clamp**	**IP67 Cable gland**	**Solid cables / stranded wire cables / flexible cables**
16 A	8 - 15 mm	1 to 2.5 mm²	8 - 15 mm	-	1 to 4 mm²
32 A	11.5 - 21 mm	2.5 to 6 mm²	11.5 - 21 mm	-	2.5 to 10 mm²
63 A	-	-	-	17 - 31 mm / PG36	6 to 25 mm²
125 A	-	-	-	26 - 48 mm / PG48	16 to 70 mm²

Code of wander sockets

Rating		Rated voltage											
		100 - 130 V AC			200 - 250 V AC			380 - 415 V AC			480 - 500 V AC		
Poles and wires		**2P + ⏚**	**3P + ⏚**	**3P+N + ⏚**	**2P + ⏚**	**3P + ⏚**	**3P+N + ⏚**	**2P + ⏚**	**3P + ⏚**	**3P+N + ⏚**	**2P + ⏚**	**3P + ⏚**	**3P+N + ⏚**
FAST connection, without screws													
IP44	16 A	**PKY16M413**	**PKY16M414**	**PKY16M415**	**PKY16M423**	**PKY16M424**	**PKY16M425**	**PKY16M433**	**PKY16M434**	**PKY16M435**	-	**PKY16M444**	**PKY16M445**
	32 A	**PKY32M413**	**PKY32M414**	**PKY32M415**	**PKY32M423**	**PKY32M424**	**PKY32M425**	**PKY32M433**	**PKY32M434**	**PKY32M435**	-	**PKY32M444**	**PKY32M445**
IP67	16 A	**PKY16M713**	**PKY16M714**	**PKY16M715**	**PKY16M723**	**PKY16M724**	**PKY16M725**	**PKY16M733**	**PKY16M734**	**PKY16M735**	-	**PKY16M744**	**PKY16M745**
	32 A	**PKY32M713**	**PKY32M714**	**PKY32M715**	**PKY32M723**	**PKY32M724**	**PKY32M725**	**PKY32M733**	**PKY32M734**	**PKY32M735**	-	**PKY32M744**	**PKY32M745**
SCREW connection													
IP44	16 A	**PKF16M413**	**PKF16M414**	**PKF16M415**	**PKF16M423**	**PKF16M424**	**PKF16M425**	**PKF16M433**	**PKF16M434**	**PKF16M435**	-	**PKF16M444**	**PKF16M445**
	32 A	**PKF32M413**	**PKF32M414**	**PKF32M415**	**PKF32M423**	**PKF32M424**	**PKF32M425**	**PKF32M433**	**PKF32M434**	**PKF32M435**	-	**PKF32M444**	**PKF32M445**
IP67	16 A	**PKF16M713**	**PKF16M714**	**PKF16M715**	**PKF16M723**	**PKF16M724**	**PKF16M725**	**PKF16M733**	**PKF16M734**	**PKF16M735**	-	**PKF16M744**	**PKF16M745**
	32 A	**PKF32M713**	**PKF32M714**	**PKF32M715**	**PKF32M723**	**PKF32M724**	**PKF32M725**	**PKF32M733**	**PKF32M734**	**PKF32M735**	-	**PKF32M744**	**PKF32M745**
	63 A	-	**81476**	**81477**	**81478**	**81479**	**81480**	-	**81482**	**81483**	-	**81485**	**81486**
	125 A	-	**81488**	**81489**	**81490**	**81491**	**81492**	-	**81494**	**81495**	-	**81497**	**81498**

PG149134 

PKY16M423

PG149139 

PKY16M733

PG149126 

PKF16M423

PG149131 

PKF16M733

PG149117 

81495

PratiKa sockets
Low voltage
Wall-mounted sockets

Technical data

			FAST connection, without screws	SCREW connection
			PB102305 	PB102235 
Main characteristics			**They can be wall-mounted to supply appliances with wander plugs. They are very compact in dimensions.**	
Degree of protection	According to IEC 60529	16 and 32 A	IP44	IP44
			-	IP67
	According to EN 62262	Against external mechanical impacts	IK08	IK08
Resistance to fire and abnormal heat	According to IEC 60695-2-11	Glow wire test	750°C	750°C
Materials			Housing made of self-extinguishing polymer	Housing made of self-extinguishing polymer
			Sleeves made of brass	Sleeves made of brass
			Screws, pins and springs made of stainless steel	Screws, pins and springs made of stainless steel
Connection terminals			Without screws and without stripping the conductor	Captive screws, completely loosened

Connection

	FAST connection, without screws			SCREW connection		
Rating	**Cable diameter**	**Cable entry**	**Maximum cross section of conductors**	**Cable diameter**	**Cable entry**	**Maximum cross section of conductors**
(In)		**IP44**	**IEC 60309-1/A1, 60309-2/A1 Stranded wire cables / flexible cables**		**IP44 / IP67**	**Solid cables / stranded wire cables / flexible cables**
16 A	Max 21,0 mm	M25 threaded nut	1 to 2.5 mm^2	Max 21,0 mm	M25 threaded nut+cable gland	1 to 4 mm^2
32 A			2.5 to 6 mm^2			2.5 to 10 mm^2

Code of Wall-mounted sockets

Rating		Rated voltage											
		100 - 130 V AC			200 - 250 V AC			380 - 415 V AC			480 - 500 V AC		
Poles and wires		**2P + ⏚**	**3P + ⏚**	**3P+N + ⏚**	**2P + ⏚**	**3P + ⏚**	**3P+N + ⏚**	**2P + ⏚**	**3P + ⏚**	**3P+N + ⏚**	**2P + ⏚**	**3P + ⏚**	**3P+N + ⏚**
FAST connection													
IP44	16 A	**PKY16W413**	**PKY16W414**	**PKY16W415**	**PKY16W423**	**PKY16W424**	**PKY16W425**	**PKY16W433**	**PKY16W434**	**PKY16W435**	-	**PKY16W444**	**PKY16W445**
	32 A	**PKY32W413**	**PKY32W414**	**PKY32W415**	**PKY32W423**	**PKY32W424**	**PKY32W425**	**PKY32W433**	**PKY32W434**	**PKY32W435**	-	**PKY32W444**	**PKY32W445**
SCREW connection													
IP44	16 A	**PKF16W413**	**PKF16W414**	**PKF16W415**	**PKF16W423**	**PKF16W424**	**PKF16W425**	**PKF16W433**	**PKF16W434**	**PKF16W435**	-	**PKF16W444**	**PKF16W445**
	32 A	**PKF32W413**	**PKF32W414**	**PKF32W415**	**PKF32W423**	**PKF32W424**	**PKF32W425**	**PKF32W433**	**PKF32W434**	**PKF32W435**	-	**PKF32W444**	**PKF32W445**
SMALL - SCREW connection													
IP67	16 A	**PKF16W713**	**PKF16W714**	**PKF16W715**	**PKF16W723**	**PKF16W724**	**PKF16W725**	**PKF16W733**	**PKF16W734**	**PKF16W735**	-	**PKF16W744**	**PKF16W745**
	32 A	**PKF32W713**	**PKF32W714**	**PKF32W715**	**PKF32W723**	**PKF32W724**	**PKF32W725**	**PKF32W733**	**PKF32W734**	**PKF32W735**	-	**PKF32W744**	**PKF32W745**

PB102306 

PKY32W435

PB102229b 

PKF16W434

PB102229b 

PKF32W734

PratiKa sockets
Low voltage
Wall-mounted sockets with Back box

Technical data

			Sockets with Back box
			PB102236  PG149143 
Main characteristics			**They can be wall-mounted to supply appliances with wander plugs.**
Degree of protection	According to IEC 60529	16 and 32 A	IP44
			IP67
		63 A and 125 A	IP67
	According to EN 62262	Against external mechanical impacts	IK08
Pilot contact			Available in the 63 A and 125 A
Resistance to fire and abnormal heat	According to IEC 60695-2-11	Glow wire test	850°C
Materials			Housing made of self-extinguishing polymer
			Sleeves made of nickel-plated brass
			Screws, pins and springs made of stainless steel
Connection terminals			Captive screws, completely loosened

Connection

	Sockets with Back box		
Rating	**Cable entry**		**Maximum cross section of conductors**
(In)	**IP44 / IP67 Fair-lead**	**IP67 Cable gland**	**Solid and stranded wire flexible cables**
16 A	8 - 15 mm	PG16 (PG21 5P)	1 to 4 mm^2
32 A	11.5 - 21 mm	PG21	2.5 to 10 mm^2
63 A	-	PG36	6 to 25 mm^2
125 A	-	PG48	16 to 70 mm^2

Code of wall-mounted socket with Back box

Rating		Rated voltage											
		100 - 130 V AC			200 - 250 V AC			380 - 415 V AC			480 - 500 V AC		
Poles and wires		2P + ⏚	3P + ⏚	3P+N + ⏚	2P + ⏚	3P + ⏚	3P+N + ⏚	2P + ⏚	3P + ⏚	3P+N + ⏚	2P + ⏚	3P + ⏚	3P+N + ⏚
IP44	16 A	83101	83102	83103	83104	83105	83106	83107	83108	83109	-	83111	83112
	32 A	83113	83114	83115	83116	83117	83118	83119	83120	83121	-	83123	83124
IP67	16 A	83151	83152	83153	83154	83155	83156	83157	83158	83159	-	83161	83162
	32 A	83163	83164	83165	83166	83167	83168	83169	83170	83171	-	83173	83174
	63 A	-	81176	81177	81178	81179	81180	-	81182	81183	-	81185	81186
	125 A	-	81188	81189	81190	81191	81192	-	81194	81195	-	81197	81198

PG149166 
83104

PG149171 
83171

PG149143 
81195

PratiKa sockets

Low voltage

Back box wall-mounted for PratiKa panel and sockets

Technical data

			Back box wall-mounted
			PB102314 
Main characteristics			**They can be wall-mounted to supply appliances with wander plugs. The back box permit the use of panel sockets PratiKa, both screw and fast version, to create a wall installation with horizontal outlet.**
Degree of protection	According to IEC 60529	16 and 32 A	IP44
			IP67 (box + panel socket)
	According to EN 62262	Against external mechanical impacts	IK09
Pilot contact			Available in the 63 A and 125 A
Resistance to fire and abnormal heat	According to IEC 60695-2-11	Glow wire test	850°C
Materials			Housing made of self-extinguishing polymer
			Screws, made of stainless steel

Connection

Back box wall-mounted		
Rating	**Cable entry**	
(In)	**IP44/IP67**	**Cable diameter**
16 A and 32 A	M25	Max 21 mm
	Possibility to make in/out in the bottom part of the box (position for drilling M20, M25 or M32). Threaded caps M25 supplied with gasket IP67	

PB102315



PKZ100



PKZ085

Code of Back box wall mounted for fitting PratiKa panel sockets IP44 / IP67

Description poles	Code
Small sized BOX	
Permits the mounting of socket (16 A 3 or 4 poles) with flange 65 x 85	**PKZ085**
Big sized BOX	
Permits the mounting of socket (16 A 5 poles and 32 A 3 or 4 or 5 poles) with flange 90 x 100	**PKZ100**
Description poles	**Code**
Cable gland	
M25	**PKZ025**
M32	**PKZ032**

PB102317 

PG149211 

PB102316 

Example

PK2100 + PKY16G734

PratiKa sockets
Low voltage
Panel-mounted angled and straight sockets

Technical data

			FAST connection, without screws	
			Angled sockets	Straight sockets
			PB102199 	PB102234 
Main characteristics			**They can be mounted on a plate, panel or machine to supply appliance with wander plugs.**	
Degree of protection	According to IEC 60529	16 and 32 A	IP44	IP44
			IP67	IP67
	According to EN 62262	Against external mechanical impacts	IK08	IK08
Resistance to fire and abnormal heat	According to IEC 60695-2-11	Glow wire test	850°C	850°C
Flange dimensions (IP44 - IP67)	16 A	2P + ⏚	65 x 85 mm	65 x 85 mm
		3P + ⏚	65 x 85 mm	65 x 85 mm
		3P+N + ⏚	90 x 100 mm	90 x 100 mm
	32 A	2P + ⏚	90 x 100 mm	90 x 100 mm
		3P + ⏚	90 x 100 mm	90 x 100 mm
		3P+N + ⏚	90 x 100 mm	90 x 100 mm
Materials			Housing made of self-extinguishing polymer	Housing made of self-extinguishing polymer
			Sleeves made of brass	Sleeves made of brass
			Pins and springs made of stainless steel	Pins and springs made of stainless steel
Connection terminals			Without screws and without stripping the conductor	Without screws and without stripping the conductor

Connection

	FAST connection, without screws	
	Angled sockets	Straight sockets
Rating	**Maximum cross section of conductors**	
(In)	**IEC 60309-1/A1, 60309-2/A1 Stranded wire cables / flexible cables**	
16 A	1 to 2.5 mm^2	1 to 2.5 mm^2
32 A	2.5 to 6 mm^2	2.5 to 6 mm^2

Code of panel-mounted angled and straight sockets

Rating		Rated voltage											
		100 - 130 V AC			200 - 250 V AC			380 - 415 V AC			480 - 500 V AC		
Poles and wires		2P + ⏚	3P + ⏚	3P+N + ⏚	2P + ⏚	3P + ⏚	3P+N + ⏚	2P + ⏚	3P + ⏚	3P+N + ⏚	2P + ⏚	3P + ⏚	3P+N + ⏚
FAST connection, without screws - Angled sockets													
IP44	16 A	PKY16F413	PKY16F414	PKY16F415	PKY16F423	PKY16F424	PKY16F425	PKY16F433	PKY16F434	PKY16F435	-	PKY16F444	PKY16F445
	32 A	PKY32F413	PKY32F414	PKY32F415	PKY32F423	PKY32F424	PKY32F425	PKY32F433	PKY32F434	PKY32F435	-	PKY32F444	PKY32F445
IP67	16 A	PKY16F713	PKY16F714	PKY16F715	PKY16F723	PKY16F724	PKY16F725	PKY16F733	PKY16F734	PKY16F735	-	PKY16F744	PKY16F745
	32 A	PKY32F713	PKY32F714	PKY32F715	PKY32F723	PKY32F724	PKY32F725	PKY32F733	PKY32F734	PKY32F735	-	PKY32F744	PKY32F745
FAST connection, without screws - Straight sockets													
IP44	16 A	PKY16G413	PKY16G414	PKY16G415	PKY16G423	PKY16G424	PKY16G425	PKY16G433	PKY16G434	PKY16G435	-	PKY16G444	PKY16G445
	32 A	PKY32G413	PKY32G414	PKY32G415	PKY32G423	PKY32G424	PKY32G425	PKY32G433	PKY32G434	PKY32G435	-	PKY32G444	PKY32G445
IP67	16 A	PKY16G713	PKY16G714	PKY16G715	PKY16G723	PKY16G724	PKY16G725	PKY16G733	PKY16G734	PKY16G735	-	PKY16G744	PKY16G745
	32 A	PKY32G713	PKY32G714	PKY32G715	PKY32G723	PKY32G724	PKY32G725	PKY32G733	PKY32G734	PKY32G735	-	PKY32G744	PKY32G745

PG149134 
PKY16F423

PG149139 
PKY32F734

PG149139 
PKY16G423

PG149139 
PKY32G734

PratiKa sockets
Low voltage
Panel-mounted angled and straight sockets

Technical data

			SCREW connection Angled sockets	Straight sockets
			PB102199 	PB102234 
Main characteristics			**They can be mounted on a plate, panel or machine to feed appliances with wander plugs.**	
Degree of protection	According to IEC 60529	16 and 32 A	IP44	IP44
			IP67	IP67
		63 and 125 A	IP67	IP67
	According to EN 62262	Against external mechanical impacts	IK08	IK08
Pilot contact			Available in the 63 A and 125 A	Available in the 63 A and 125 A
Resistance to fire and abnormal heat	According to IEC 60695-2-11	Glow wire test	850°C	850°C
Flange dimensions (IP44 - IP67)	16 A	2P + ⏚, 3P + ⏚	65 x 85 mm	65 x 85 mm
		3P+N + ⏚	90 x 100 mm	90 x 100 mm
	32 A		90 x 100 mm	90 x 100 mm
	63 A		100 x 107 mm	100 x 107 mm
	125 A		110 x 114 mm	110 x 114 mm
Materials			Housing made of self-extinguishing polymer	Housing made of self-extinguishing polymer
			Sleeves made of brass for 16 A and 32 A	-
			Sleeves made of nickel-plated brass for 63 A and 125 A	
			Pins and springs made of stainless steel	Pins and springs made of stainless steel
Connection terminals			Captive screws, completely loosened	Captive screws, completely loosened

Connection

	SCREW connection Angled sockets	Straight sockets
Rating	**Maximum cross section of conductors**	
(In)	**Solid cables / stranded wire cables / flexible cables**	
16 A	1 to 4 mm²	1 to 4 mm²
32 A	2.5 to 10 mm²	2.5 to 10 mm²
63 A	6 to 25 mm²	6 to 25 mm²
125 A	16 to 70 mm²	16 to 70 mm²

Code of panel-mounted angled and straight sockets

Rating		Rated voltage											
		100 - 130 V AC			200 - 250 V AC			380 - 415 V AC			480 - 500 V AC		
Poles and wires		2P + ⏚	3P + ⏚	3P+N + ⏚	2P + ⏚	3P + ⏚	3P+N + ⏚	2P + ⏚	3P + ⏚	3P+N + ⏚	2P + ⏚	3P + ⏚	3P+N + ⏚
SCREW connection - Angled sockets													
IP44	16 A	**PKF16F413**	**PKF16F414**	**PKF16F415**	**PKF16F423**	**PKF16F424**	**PKF16F425**	**PKF16F433**	**PKF16F434**	**PKF16F435**	-	**PKF16F444**	**PKF16F445**
	32 A	**PKF32F413**	**PKF32F414**	**PKF32F415**	**PKF32F423**	**PKF32F424**	**PKF32F425**	**PKF32F433**	**PKF32F434**	**PKF32F435**	-	**PKF32F444**	**PKF32F445**
IP67	16 A	**PKF16F713**	**PKF16F714**	**PKF16F715**	**PKF16F723**	**PKF16F724**	**PKF16F725**	**PKF16F733**	**PKF16F734**	**PKF16F735**	-	**PKF16F744**	**PKF16F745**
	32 A	**PKF32F713**	**PKF32F714**	**PKF32F715**	**PKF32F723**	**PKF32F724**	**PKF32F725**	**PKF32F733**	**PKF32F734**	**PKF32F735**	-	**PKF32F744**	**PKF32F745**
	63 A	-	**81276**	**81277**	**81278**	**81279**	**81280**	-	**81282**	**81283**	-	**81285**	**81286**
	125 A	-	**81288**	**81289**	**81290**	**81291**	**81292**	-	**81294**	**81295**	-	**81297**	**81298**
SCREW connection - Straight sockets													
IP44	16 A	**PKF16G413**	**PKF16G414**	**PKF16G415**	**PKF16G423**	**PKF16G424**	**PKF16G425**	**PKF16G433**	**PKF16G434**	**PKF16G435**	-	**PKF16G444**	**PKF16G445**
	32 A	**PKF32G413**	**PKF32G414**	**PKF32G415**	**PKF32G423**	**PKF32G424**	**PKF32G425**	**PKF32G433**	**PKF32G434**	**PKF32G435**	-	**PKF32G444**	**PKF32G445**
IP67	16 A	**PKF16G713**	**PKF16G714**	**PKF16G715**	**PKF16G723**	**PKF16G724**	**PKF16G725**	**PKF16G733**	**PKF16G734**	**PKF16G735**	-	**PKF16G744**	**PKF16G745**
	32 A	**PKF32G713**	**PKF32G714**	**PKF32G715**	**PKF32G723**	**PKF32G724**	**PKF32G725**	**PKF32G733**	**PKF32G734**	**PKF32G735**	-	**PKF32G744**	**PKF32G745**
	63 A	-	**81676**	**81677**	**81678**	**81679**	**81680**	-	**81682**	**81683**	-	**81685**	**81686**
	125 A	-	**81688**	**81689**	**81690**	**81691**	**81692**	-	**81694**	**81695**	-	**81697**	**81698**

PG149174 
PKF16F423

PG149179 
PKF32F734

PG149183 
81283

PG149186 
PKF16G423

PG149191 
PKF32G734

PG149195 
81683

PratiKa sockets
Low voltage
Multiple adapters

Technical data

			Multiple adapters
			PB102236 
Main characteristics			**They can be used for temporary situations only and in certain industrial environments where there is no danger of explosions or fire.**
Degree of protection	According to IEC 60529	16 and 32 A	IP44
			IP67
	According to EN 62262	Against external mechanical impacts	IK08
LEDs when lighted show the presence of Voltage in each plug's phases, it is not a protection			If it should be off, control the switch-board before usage or maintenance
Resistance to fire and abnormal heat	According to IEC 60695-2-11	Glow wire test	850°C
Conceived in conformity with standards			IEC 60309-1, IEC 60309-2 and IEC 60309-4
Materials			Housing made of self-extinguishing polymer
			Pins made of nickel-plated brass
			Sleeves made of brass
			Stainless steel screw

Code of multiple adapter - 1 Plug + 2 Socket-outlets

Plug side			Socket side				
Rating	Poles	Rated voltage	No.	Rating	Poles	Rated voltage	
IP44 16 A	2P + ⏚	**100 - 130 V AC**	2	16 A	2P + ⏚	**100 - 130 V AC**	**PKZM401**
		200 - 250 V AC	2	16 A	2P + ⏚	**200 - 250 V AC**	**PKZM403**
		380 - 415 V AC	2	16 A	2P + ⏚	**380 - 415 V AC**	**PKZM405**
	3P + ⏚		2	16 A	3P + ⏚		**PKZM406**
IP67 16 A	2P + ⏚	**100 - 130 V AC**	2	16 A	2P + ⏚	**100 - 130 V AC**	**PKZM701**
		200 - 250 V AC	2	16 A	2P + ⏚	**200 - 250 V AC**	**PKZM703**
		380 - 415 V AC	2	16 A	2P + ⏚	**380 - 415 V AC**	**PKZM705**
	3P + ⏚		2	16 A	3P + ⏚		**PKZM706**

Code of multiple adapter - 1 Plug + 3 Socket-outlets

Plug side			Socket side				
Rating	Poles	Rated voltage	No.	Rating	Poles	Rated voltage	
IP44 16 A	2P + ⏚	**100 - 130 V AC**	3	16 A	2P + ⏚	**100 - 130 V AC**	**PKZM407**
		200 - 250 V AC	3	16 A	2P + ⏚	**200 - 250 V AC**	**PKZM409**
	3P + ⏚	**380 - 415 V AC**	3	16 A	3P + ⏚	**380 - 415 V AC**	**PKZM412**
32 A	3P+N + ⏚		2	16 A	2P + ⏚	**200 - 250 V AC**	**PKZM413**
			1	32 A	3P+N + ⏚	**380 - 415 V AC**	
IP67 16 A	2P + ⏚	**100 - 130 V AC**	3	16 A	2P + ⏚	**100 - 130 V AC**	**PKZM707**
		200 - 250 V AC	3	16 A	2P + ⏚	**200 - 250 V AC**	**PKZM709**
	3P + ⏚	**380 - 415 V AC**	3	16 A	2P + ⏚	**380 - 415 V AC**	**PKZM712**
32 A	3P+N + ⏚		2	16 A	3P + ⏚	**200 - 250 V AC**	**PKZM713**
			1	32 A	3P+N + ⏚	**380 - 415 V AC**	

PB102187 

PKZM403

PB102188 

PKZM712

PratiKa sockets
Low voltage
Domestic panel-mounted sockets

Functions

They are available in the panel-mounted versions and can be fitted directly on Kaedra enclosures or on wall-boxes.

Technical data

Main characteristics			
Degree of protection	According to IEC 60529		IP54 and IP65
	According to EN 62262	Against external mechanical impacts	IK09
Resistance to fire and abnormal heat	According to IEC 60695-2-11	Glow wire test	850°C
Materials			Housing made of self-extinguishing polymer
			Pins and springs made of stainless steel
			Spring loaded cover
Colors			Blue, black or gray (RAL 7035)

PB102189



81139

PB102190



81140

PB102191



81141

PB102192



81142

PB102193



PKS52B

PB102194



PKS61B

DB113097

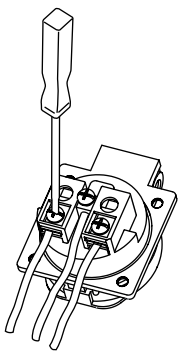

PKS51G
Version with back tightening terminals

DB113096

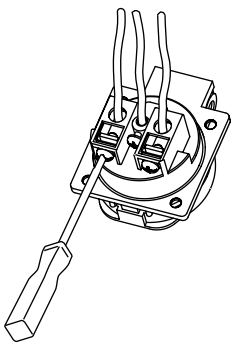

PKS52G
Version with side tightening terminals

Code for domestic sockets 65 x 85 - IP65

Rating	Rated voltage	Type	Number of sockets	Code grey
	250 V AC			
Poles	2P + ⏚	Standard		
10 - 16 A		Italy	2	81139
			1 (dual - use)	81146
		French	1	81140
		Germay	1	81141
		England	1	81144
		Switzerland	1	81145

Code for RJ 45 support 65 x 85 - IP65

Description	Code grey
With 1 adapter RJ45 Infra+	81142
With 2 adapters RJ45 Infra+	81143

Code for domestic sockets 50 x 50 - IP54

Rating	Rated voltage	Type	Code		
	250 V AC				
Poles	2P + ⏚	Standard	Grey	Blue	Black
With back tightening terminals					
10 - 16 A		Germany	PKS51G	PKS51B	PKS51N
		French	PKN51G	PKN51B	PKN51N
With side tightening terminals					
10 - 16 A		Germany	PKS52G	PKS52B	PKS52N
		French	PKN52G	PKN52B	PKN52N

Code for domestic sockets 65 x 85 - IP54

Rating	Rated voltage	Type	Code		
	250 V AC				
Poles	2P + ⏚	Standard	Grey	Blue	Black
With back tightening terminals					
10 - 16 A		Germany	PKS61G	PKS61B	PKS61N
		French	PKN61G	PKN61B	PKN61N
With side tightening terminals					
10 - 16 A		Germany	PKS62G	PKS62B	PKS62N
		French	PKN62G	PKN62B	PKN62N

PratiKa sockets
Extra-low voltage
Selection guide

Sockets 16 - 32 A




Rated current	Poles and wires	Freq.	Rated voltage	Clock position of secondary keyway	Wander sockets	
		Hz			IP44	IP67
16 A	2P	50/60	20-25 V	s.r.	82401	82451
	3P	50/60		s.r.	82402	82452
	2P	50/60	40-50 V	12 h	82403	82453
	3P	50/60		12 h	82404	82454
	2P	100/200	20-25 V / 40-50 V	4 h	82405	82455
	3P	100/200		4 h	82406	82456
	2P	401/500		11 h	82411	82461
	3P	401/500		11 h	82412	82462
	2P	⎓	20-25 V / 40-50 V	10 h	82413	82463
32 A	2P	50/60	20-25 V	s.r.	82415	82465
	3P	50/60		s.r.	82416	82466
	2P	50/60	40-50 V	12 h	82417	82467
	3P	50/60		12 h	82418	82468
	2P	100/200	20-25 V / 40-50 V	4 h	82419	82469
	3P	100/200		4 h	82420	82470
	2P	401/500		11 h	82425	82475
	3P	401/500		11 h	82426	82476
	2P	⎓	20-25 V / 40-50 V	10 h	82427	82477
Technical data, see page					38	

Sockets with safety transformer

				Unika				
								
Rated power	Rated voltage			Number and type of sockets	Panel mounted version		Wall-mounted version	
	Primary	Secondary			IP44	IP65	IP44	IP65
160 VA	230 V	24 V		1 x 2P 16 A	82026	82076	83026	83076
	400 V	24 V		1 x 2P 16 A	82027	82077	83027	83077
	230 V	24 V		-	-	-	-	-
	400 V	24 V		-	-	-	-	-
Technical data, see page					44			






	Panel-mounted straight sockets Flange 65 x 65		Wall-mounted sockets	
	IP44	IP67	IP44	IP44
	82901	82951	82101	82151
	82902	82952	82102	82152
	82903	82953	82103	82153
	82904	82954	82104	82154
	82905	82955	82105	82155
	82906	82956	82106	82156
	82911	82961	82111	82161
	82912	82962	82112	82162
	82913	82963	82113	82163
	82915	82965	82115	82165
	82916	82966	82116	82166
	82917	82967	82117	82167
	82918	82968	82118	82168
	82919	82969	82119	82169
	82920	82970	82120	82170
	82925	82975	82125	82175
	82926	82976	82126	82176
	82927	82977	82127	82177

39

Isoblock




	Number and type of sockets	Wall-mounted version
		IP65
	1 x 2P 16 A	82061
	1 x 2P 16 A	82063
	2 x 2P 16 A	82062
	2 x 2P 16 A	82064

49

PratiKa sockets
Extra-low voltage
Wander sockets

Technical data

			Wander sockets
			PB102243 
Main characteristics			**Designed to supply fixed or movable equipements by a flexible cable.**
Degree of protection	According to IEC 60529	16 and 32 A	IP44
			IP67
	According to EN 62262	Against external mechanical impacts	IK08
Resistance to fire and abnormal heat	According to IEC 60695-2-11	Glow wire test	850°C
Materials			Housing made of self-extinguishing polymer
			Sleeves made of nickel-plated brass
			Screws, pins and springs made of stainless steel
Connection terminals			Captive screws, completely loosened

Connection

	Wander sockets		
Rating	**Cable entry**		**Maximum cross section of conductors**
(In)	**IP44 / IP67 Fair-lead**	**IP67 Cable gland**	**Solid and stranded wire flexible cables**
16 A	6 - 23 mm	PG21	4 to 10 mm²
32 A	6 - 23 mm	PG21	4 to 10 mm²

Code of wander sockets

Rating	**Rated voltage**									
	20-25 V 50/60 Hz		**40-50 V 50/60 Hz**		**20-25 V / 40-50 V 100-200 Hz**		**401-500 Hz**		**20-25 V / 40-50 V ⎓**	
Poles and wires	**2P**	**3P**	**2P**	**3P**	**2P**	**3P**	**2P**	**3P**	**2P**	**3P**
IP44 16 A	**82401**	**82402**	**82403**	**82404**	**82405**	**82406**	**82411**	**82412**	**82413**	**-**
32 A	**82415**	**82416**	**82417**	**84518**	**82419**	**82420**	**82425**	**82426**	**82427**	**-**
IP67 16 A	**82451**	**82452**	**82453**	**82454**	**82455**	**82456**	**82461**	**82462**	**82463**	**-**
32 A	**82465**	**82466**	**82467**	**82468**	**82469**	**82470**	**82475**	**82476**	**82477**	**-**

PG149119 

82402

PG149123 

82468

PratiKa sockets
Extra-low voltage
Panel-mounted and wall-mounted sockets

Technical data

			Panel-mounted sockets	Wall-mounted sockets
			PB102243 	PB102244 
Main characteristics			**They can be mounted on a plate, panel or machine to supply appliances with wander plugs.**	**They can be wall-mounted to supply appliances with wander plugs.**
Degree of protection	According to IEC 60529	16 and 32 A	IP44	IP44
			IP67	IP67
	According to EN 62262	Against external mechanical impacts	IK08	IK08
Resistance to fire and abnormal heat	According to IEC 60695-2-11	Glow wire test	850°C	850°C
Materials			Housing made of self-extinguishing polymer	Housing made of self-extinguishing polymer
			Sleeves made of nickel-plated brass	Sleeves made of nickel-plated brass
			Screws, pins and springs made of stainless steel	Screws, pins and springs made of stainless steel
Connection terminals			Captive screws, completely loosened	Captive screws, completely loosened

Connection

	Panel-mounted sockets	Wall-mounted sockets		
Rating	**Maximum cross section of conductors**	**Cable entry**		**Maximum cross section of conductors**
(In)	**Solid and stranded wire flexible cables**	**IP44 / IP67 Fair-lead**	**IP67 Cable gland**	**Solid and stranded wire flexible cables**
16 A	1 to 2,5 mm²	6 - 23 mm	PG21	4 to 10 mm²
32 A	2,5 to 6 mm²	6 - 23 mm	PG21	4 to 10 mm²

Code of panel-mounted sockets

Rating		Rated voltage									
		20-25 V 50/60 Hz		40-50 V 50/60 Hz		20-25 V / 40-50 V 100-200 Hz		401-500 Hz		20-25 V / 40-50 V ⎓	
Poles and wires		**2P**	**3P**	**2P**	**3P**	**2P**	**3P**	**2P**	**3P**	**2P**	**3P**
Flange 65 x 65 mm											
IP44	16 A	**82901**	**82902**	**82903**	**82904**	**82905**	**82906**	**82911**	**82912**	**82913**	-
	32 A	**82915**	**82916**	**82917**	**84918**	**82919**	**82920**	**82925**	**82926**	**82927**	-
IP67	16 A	**82951**	**82952**	**82953**	**82954**	**82955**	**82956**	**82961**	**82962**	**82963**	-
	32 A	**82965**	**82966**	**82967**	**82968**	**82969**	**82970**	**82975**	**82976**	**82977**	-

Code of wall-mounted sockets

Rating		Rated voltage									
		20-25 V 50/60 Hz		40-50 V 50/60 Hz		20-25 V / 40-50 V 100-200 Hz		401-500 Hz		20-25 V / 40-50 V ⎓	
Poles and wires		**2P**	**3P**	**2P**	**3P**	**2P**	**3P**	**2P**	**3P**	**2P**	**3P**
IP44	16 A	**82101**	**82102**	**82103**	**82104**	**82105**	**82106**	**82111**	**82112**	**82113**	-
	32 A	**82115**	**82116**	**82117**	**84118**	**82119**	**82120**	**82125**	**82126**	**82127**	-
IP67	16 A	**82151**	**82152**	**82153**	**82154**	**82155**	**82156**	**82161**	**82162**	**82163**	-
	32 A	**82165**	**82166**	**82167**	**82168**	**82169**	**82170**	**82175**	**82176**	**82177**	-

PG149159 
82901

PG149163 
82954

PG149145 
82101

PB102245 
82168

PratiKa sockets
With interlock switch
Unika - Isoblock / Selection guide

Sockets with interlock switch

Unika - Panel-mounted version









Rated nominal	Poles and wires	Freq.	Rated voltage	Clock position of contact	Without protection			Protected by FUSE carrier			With DIN rail
		Hz			IP44	IP65	IP65	IP44	IP65	IP65	IP65
16 A	2P + ⏚	50/60	100-130 V	4 h	82028	82078	-	82128	82178	-	-
	3P + ⏚	50/60		4 h	82029	82079	-	82129	82179	-	-
	3P+N + ⏚	50/60		4 h	82030	82080	-	82130	82180	-	-
	2P + ⏚	50/60	200-250 V	6 h	82031	82081	-	82132	82181	-	-
	3P + ⏚	50/60		9 h	82032	82082	-	82132	82182	-	-
	3P+N + ⏚	50/60		9 h	82033	82083	-	82133	82183	-	-
	2P + ⏚	50/60	380-415 V	9 h	82034	82084	-	82134	82184	-	-
	3P + ⏚	50/60		6 h	82035	82085	-	82135	82185	-	-
	3P+N + ⏚	50/60		6 h	82036	82086	-	82136	82186	-	-
	3P + ⏚	50/60	480-500 V	7 h	82037	82087	-	82137	82187	-	-
	3P+N + ⏚	50/60		7 h	82038	82088	-	82138	82188	-	-
32 A	2P + ⏚	50/60	100-130 V	4 h	82039	82089	-	82139	82189	-	-
	3P + ⏚	50/60		4 h	82040	82090	-	82140	82190	-	-
	3P+N + ⏚	50/60		4 h	82041	82091	-	82141	82191	-	-
	2P + ⏚	50/60	200-250 V	6 h	82042	82092	-	82142	82192	-	-
	3P + ⏚	50/60		9 h	82043	82093	-	82143	82193	-	-
	3P+N + ⏚	50/60		9 h	82044	82094	-	82144	82194	-	-
	2P + ⏚	50/60	380-415 V	9 h	82045	82095	-	82145	82195	-	-
	3P + ⏚	50/60		6 h	82046	82096	-	82146	82196	-	-
	3P+N + ⏚	50/60		6 h	82047	82097	-	82147	82197	-	-
	3P+N + ⏚	50/60	380-440 V	3 h	-	-	-	-	-	-	-
	3P + ⏚	50/60	480-500 V	7 h	82048	82098	-	82148	82198	-	-
	3P+N + ⏚	50/60		7 h	82049	82099	-	82149	82199	-	-
63 A	3P + ⏚	50/60	100-130 V	4 h	-	-	PKB63T514	-	-	PKB63V514	PKB63U514
	3P+N + ⏚	50/60		4 h	-	-	PKB63T515	-	-	PKB63V515	PKB63U515
	2P + ⏚	50/60	200-250 V	6 h	-	-	PKB63T523	-	-	PKB63V523	PKB63U523
	3P + ⏚	50/60		9 h	-	-	PKB63T524	-	-	PKB63V524	PKB63U524
	3P+N + ⏚	50/60		9 h	-	-	PKB63T525	-	-	PKB63V523	PKB63U525
	3P + ⏚	50/60	380-415 V	6 h	-	-	PKB63T534	-	-	PKB63V534	PKB63U534
	3P+N + ⏚	50/60		6 h	-	-	PKB63T535	-	-	PKB63V535	PKB63U535
	3P + ⏚	50/60	480-500 V	7 h	-	-	PKB63T544	-	-	-	PKB63U544
	3P+N + ⏚	50/60		7 h	-	-	PKB63T545	-	-	-	PKB63U545
Technical data, see page					42						

Sockets with safety transformer

Unika - Panel-mounted version




Rated power	Number and type of sockets	Rated voltage Primary	Secondary		
VA				IP44	IP65
16 A	1 x 2P 16 A	230 V	24 V	82026	82076
	1 x 2P 16 A	400 V		82027	82077
Technical data, see page				44	

Wall and embedded box

Unika - Panel-mounted version



	Number of sockets	Embedded box
	1	83924
	1 unmarked walls	-
	1 wall with knock-outs	-
	1 with junction box	-
	2 with junction box	-
	3 with junction box	-
Technical data, see page		46

Unika - Wall-mounted version









Without protection			Protected by FUSE carrier			With DIN rail
IP44	IP65	IP65	IP44	IP65	IP65	IP65
83028	83078	-	83128	83178	-	-
83029	83079	-	83129	83179	-	-
83030	83080	-	83130	83180	-	-
83031	83081	-	83131	83181	-	-
83032	83082	-	83132	83182	-	-
83033	83083	-	83133	83183	-	-
83034	83084	-	83134	83184	-	-
83035	83085	-	83135	83185	-	-
83036	83086	-	83136	83186	-	-
83037	83087	-	83137	83187	-	-
83038	83088	-	83138	83188	-	-
83039	83089	-	83139	83189	-	-
83040	83090	-	83140	83190	-	-
83041	83091	-	83141	83191	-	-
83042	83092	-	83142	83192	-	-
83043	83093	-	83143	83193	-	-
83044	83094	-	83144	83194	-	-
83045	83095	-	83145	83195	-	-
83046	83096	-	83146	83196	-	-
83047	83097	-	83147	83197	-	-
-	83299	-	-	83399	-	-
83048	83098	-	83148	83198	-	-
83049	83099	-	83149	83199	-	-
-	-	PKB63P514	-	-	PKB63R514	PKB63Q514
-	-	PKB63P515	-	-	PKB63R515	PKB63Q515
-	-	PKB63P523	-	-	PKB63R523	PKB63Q523
-	-	PKB63P524	-	-	PKB63R524	PKB63Q524
-	-	PKB63P525	-	-	PKB63R525	PKB63Q525
-	-	PKB63P534	-	-	PKB63R534	PKB63Q534
-	-	PKB63P535	-	-	PKB63R535	PKB63Q535
-	-	PKB63P544	-	-	-	PKB63Q544
-	-	PKB63P545	-	-	-	PKB63Q545

43

Isoblock - Wall-mounted version






Protected by FUSE carrier		With DIN rail	
	With LED		
IP65	IP65	IP65	IP65
83451 □	-	82751 □	-
83452 □	-	82752 □	-
83453 □	-	82753 □	-
83454 □	83354 □	82754 □	-
83455 □	-	82755 □	-
83456 □	-	82756 □	-
83457 □	-	82757 □	-
83458 □	83358 □	82758 □	-
83459 □	83359 □	82759 □	-
83461 □	-	82761 □	-
83462 □	-	82762 □	-
83463 □	-	83788 □	82763 ■
83464 □	-	83789 □	82764 ■
83465 □	-	83790 □	82765 ■
83466 □	83366 □	83791 □	82766 ■
83467 □	-	83792 □	82767 ■
83468 □	-	83793 □	82768 ■
83469 □	-	83794 □	82769 ■
83470 □	83370 □	83795 □	82770 ■
83471 □	83371 □	83796 □	82771 ■
-	-	83799 □	-
83473 □	-	83797 □	82773 ■
83474 □	-	83798 □	82774 ■
82876 ■	-	-	82778 ■
82877 ■	-	-	82777 ■
82878 ■	-	-	82776 ■
82879 ■	-	-	82779 ■
82880 ■	-	-	82780 ■
82882 ■	-	-	82782 ■
82883 ■	-	-	82783 ■
82885 ■	-	-	82785 ■
82886 ■	-	-	82786 ■

48

Unika - Wall-mounted version




IP44	IP65	
83026	83076	1P
83027	83077	2P

44

Isoblock - Wall-mounted version




IP65	IP65
82061 ■	82062 ■
82063 ■	82064 ■

49

Unika - Wall-mounted version




Modular basis



Wall mounting box				
16 - 32 A	63 A			
-	-	-	-	-
83919	-	-	-	-
83920	PKB002	-	-	-
-	-	83921	-	-
-	-	-	83922	-
-	-	-	-	83923

46

47

Isoblock - Wall-mounted version


Modular panels


Number and type sockets	With junction box	With modular enclosures
1 x B16	83925 □	83325 □
2 x B16	83926 □	83326 □
-	-	-
1 x 32/63	83927 ■	83327 ■
-	-	-
-	-	-

50

□ = Sockets 106 mm width. ■ = Sockets 144 mm width.

PratiKa sockets
With interlock switch
Unika series / Panel-mounted version

Technical data

			Protected by disconnect fuse carriers	Without protection / DIN rail
			Their technical, functional and aesthetic qualities make them particularly suitable for installation in the tertiary and industry sectors.	
Main characteristics			**The switch can be externally padlocked into position "0" and "1".**	
Construction	According to IEC 60309-2-4		IP44 and IP65	IP44 and IP65
Degree of protection	According to IEC 60529		IP44 and IP65	IP44 and IP65
	According to EN 62262	Against external mechanical impacts	IK09	IK09
Resistance to fire and abnormal heat	According to IEC 60695-2-11	Glow wire test	750°C	750°C
Operating voltage (400 V)	According to IEC 60947-3	16 A	20 A (AC22) / 9.5 kW (AC23A)	20 A (AC22) / 9.5 kW (AC23A) IEC 60947-3
		32 A	32 A (AC22) / 16 kW (AC23A)	32 A (AC22) / 16 kW (AC23A) IEC 60947-3
		63 A	63 A (AC22) / 22 kW (AC23A) / 15.5 kW (AC23)	63 A (AC22) / 22 kW (AC23A) / 15.5 kW (AC23)
Disconnect fuse carriers	Complying with IEC 60269		For CH 10,3 x 38 type fuse	-
Fuse holder version	Fuse holders NEOZED type D02 (non supplied with the product)		■	-
	The door to accede to the fuse holders can be:		Opened only with the switch in position "0"	-
			Equipped with key-lock (available as acessory) in its handle	-
DIN rail version	DIN rail up to 4,5 modules		-	■ DIN rail up to 4,5 modules
	The door to accede to the modular devices can be:		-	Opened only when the switch is on the “0” position
			-	Equipped with key-lock (available as acessory) in its handle
Materials			Housing made of self-extinguishing polymer	Housing made of self-extinguishing polymer
			External pins, pins and screws made of stainless steel	External pins, pins and screws made of stainless steel
Colour			RAL 7035	RAL 7035
Connection terminals			Captive screws	Captive screws

Connection

	Protected by disconnect fuse carriers	Without protection
Rating (In)	**Maximum cross section of conductors**	
16 A, 32 A	10 mm²	10 mm²
63 A	35 mm²	35 mm²

Code of panel-mounted sockets Unika

Rating		Rated voltage											
		100 - 130 V			200 - 250 V			380 - 415 V			480 - 500 V		
Poles and wires		2P + ⏚	3P + ⏚	3P+N + ⏚	2P + ⏚	3P + ⏚	3P+N + ⏚	2P + ⏚	3P + ⏚	3P+N + ⏚	2P + ⏚	3P + ⏚	3P+N + ⏚
Protected by disconnect fuse carriers													
IP44	16 A	82128	82129	82130	82131	82132	82133	82134	82135	82136	-	82137	82138
	32 A	82139	82140	82141	82142	82143	82144	82145	82146	82147	-	82148	82149
IP65	16 A	82178	82179	82180	82181	82182	82183	82184	82185	82186	-	82187	82188
	32 A	82189	82190	82191	82192	82193	82194	82195	82196	82197	-	82198	82199
	63 A	-	PKB63V514	PKB63V515	PKB63V523	PKB63V524	PKB63V525	-	PKB63V534	PKB63V535	-	-	-
With DIN rail													
IP65	63 A	-	PKB63U514	PKB63U515	PKB63U523	PKB63U524	PKB63U525	-	PKB63U534	PKB63U535	-	PKB63U544	PKB63U545
Without protection													
IP44	16 A	82028	82029	82030	82031	82032	82033	82034	82035	82036	-	82037	82038
	32 A	82039	82040	82041	82042	82043	82044	82045	82046	82047	-	82048	82049
IP65	16 A	82078	82079	82080	82081	82082	82083	82084	82085	82086	-	82087	82088
	32 A	82089	82090	82091	82092	82093	82094	82095	82096	82097	-	82098	82099
	63 A	-	PKB63T514	PKB63T515	PKB63T523	PKB63T524	PKB63T525	-	PKB63T534	PKB63T535	-	PKB63T544	PKB63V545

PG148011

82147

PG148015

82197

PG148002

82031

PG148006

82041

PB102330

PKB63T534

PB102332

PKB63U534

PB102331

PKB63V534

PratiKa sockets
With interlock switch
Unika series / Wall-mounted version

Technical data

			Protected by disconnect fuse carriers	Without protection / DIN rail
			Their technical, functional and aesthetic qualities make them particularly suitable for installation in the tertiary and industry sectors.	
Main characteristics			**The switch can be externally padlocked into position "0" and "1".**	
Construction	According to IEC 60309-2-4		IP44 and IP65	IP44 and IP65
Degree of protection	According to IEC 60529		IP44 and IP65	IP44 and IP65
	According to EN 62262	Against external mechanical impacts	IK09	IK09
Resistance to fire and abnormal heat	According to IEC 60695-2-11	Glow wire test	750°C	750°C
Operating voltage (400 V)	According to IEC 60947-3	16 A	20 A (AC22) / 9.5 kW (AC23A)	20 A (AC22) / 9.5 kW (AC23A) IEC 60947-3
		32 A	32 A (AC22) / 16 kW (AC23A)	32 A (AC22) / 16 kW (AC23A) IEC 60947-3
		63 A	63 A (AC22) / 22 kW (AC23A) / 15.5 kW (AC23)	63 A (AC22) / 22 kW (AC23A) / 15.5 kW (AC23)
Disconnect fuse carriers	Complying with IEC 60269		For CH 10,3 x 38 type fuse	-
Fuse holder version	Fuse holders NEOZED type D02 (non supplied with the product)		■	-
	The door to accede to the fuse holders can be:		Opened only with the switch in position "0"	-
			Equipped with key-lock (available as acessory) in its handle	-
DIN rail version	DIN rail up to 4,5 modules		-	■ DIN rail up to 4,5 modules
	The door to accede to the modular devices can be:		-	Opened only when the switch is on the “0” position
			-	Equipped with key-lock (available as acessory) in its handle
Wall-mounted version			Cable entry (from the top)	Cable entry (from the top)
			Complete with fair-lead for 25 mm Max. Diameter cables and conduits, and/or PG21 cable gland	
			Screw head plugs fused not supplied	Screw head plugs fused not supplied
Materials			Housing made of self-extinguishing polymer	Housing made of self-extinguishing polymer
			External pins, pins and screws made of stainless steel	External pins, pins and screws made of stainless steel
Colour			RAL 7035	RAL 7035
Connection terminals			Captive screws	Captive screws

Connection

	Protected by disconnect fuse carriers	Without protection
Rating (In)	**Maximum cross section of conductors**	
16 A, 32 A	10 mm²	10 mm²
63 A	35 mm²	35 mm²

Code of wall-mounted sockets Unika

Rating		Rated voltage											
		100 - 130 V			200 - 250 V			380 - 415 V			480 - 500 V		
Poles and wires		2P + ⏚	3P + ⏚	3P+N + ⏚	2P + ⏚	3P + ⏚	3P+N + ⏚	2P + ⏚	3P + ⏚	3P+N + ⏚	2P + ⏚	3P + ⏚	3P+N + ⏚
Protected by disconnect fuse carriers													
IP44	16 A	**83128**	**83129**	**83130**	**83131**	**83132**	**83133**	**83134**	**83135**	**83136**	**-**	**83137**	**83138**
	32 A	**83139**	**83140**	**83141**	**83142**	**83143**	**83144**	**83145**	**83146**	**83147**	**-**	**83148**	**83149**
IP65	16 A	**83178**	**83179**	**83180**	**83181**	**83182**	**83183**	**83184**	**83185**	**83186**	**-**	**83187**	**83188**
	32 A	**83189**	**83190**	**83191**	**83192**	**83193**	**83194**	**83195**	**83196**	**83197**	**-**	**83198**	**83199**
	63 A	**-**	**PKB63R514**	**PKB63R515**	**PKB63R523**	**PKB63R524**	**PKB63R525**	**-**	**PKB63R534**	**PKB63R535**	**-**	**-**	**-**
With DIN rail													
IP65	63 A	**-**	**PKB63Q514**	**PKB63Q515**	**PKB63Q523**	**PKB63Q524**	**PKB63Q525**	**-**	**PKB63Q534**	**PKB63Q535**	**-**	**PKB63Q544**	**PKB63Q545**
Without protection													
IP44	16 A	**83028**	**83029**	**83030**	**83031**	**83032**	**83033**	**83034**	**83035**	**83036**	**-**	**83037**	**83038**
	32 A	**83039**	**83040**	**83041**	**83042**	**83043**	**83044**	**83045**	**83046**	**83047**	**-**	**83048**	**83049**
IP65	16 A	**83078**	**83079**	**83080**	**83081**	**83082**	**83083**	**83084**	**83085**	**83086**	**-**	**83087**	**83088**
	32 A	**83089**	**83090**	**83091**	**83092**	**83093**	**83094**	**83095**	**83096**	**83097**	**-**	**83098**	**83099**
	63 A	**-**	**PKB63P514**	**PKB63P515**	**PKB63P523**	**PKB63P524**	**PKB63P525**	**-**	**PKB63P534**	**PKB63P535**	**-**	**PKB63P544**	**PKB63P545**



83131



83181



83031



83041



PKB63P534



PKB63P534


PKB63R534

PratiKa sockets

With interlock switch

Unika series / Panel-mounted and wall-mounted version

Technical data

			Unika with safety transformer SELV
			Units fitted with safety transformers, in conformity with IEC742 standards.
Main characteristics			**Their modular size enables them to be used with all the components of the PratIKa Unika series.** **They are used to power circuits with a voltage rating of 50 V maximum, to protect users against direct and indirect contacts, in conformity with IEC 60364 standards.**
Degree of protection	According to IEC 60529		IP44 and IP65
	According to EN 62262	Against external mechanical impacts	IK09
Resistance to fire and abnormal heat	According to IEC 60695-2-11	Glow wire test	750°C
The unit is rated	According to IEC 61558-2-6		Class II
Rated power of safety transformer			160 VA under continuous use
Operating voltage			230: 24 V
			400: 24 V
Transformer protected against short-circuit			By the cylindrical fuses supplied
Power supply switch on the primary controlled			By a special mechanism upon the insertion of the plug
Available as follows			Fitted with one very-low-voltage IEC 60309 socket, 24 V 2P
			Wall-mounted
			Complete with fair-lead for 25 mm Max. Diameter cables and conduits, and/or PG21 cable gland
			Supplied with screw head cover
Materials			Housing made of self-extinguishing polymer
			Screws pins and springs made of stainledd steel
Colour			RAL 7035
Connection terminals			Captive screws

Connection

	Unika with safety transformer SELV
Rating (In)	**Maximum cross section of conductors**
160 VA	6 mm²

Code of panel-mounted Unika with safety transformer

Rated power		Rated voltage		Number and type of sockets	Code
		Primary	Secondary		
IP44	160 VA	**230 V**	**24 V**	1 x 16 A	**82026**
		400 V	**24 V**	1 x 16 A	**82027**
IP65	160 VA	**230 V**	**24 V**	1 x 16 A	**82076**
		400 V	**24 V**	1 x 16 A	**82077**

Code of wall-mounted Unika with safety transformer

Rated power		Rated voltage		Number and type of sockets	Code
		Primary	Secondary		
IP44	160 VA	**230 V**	**24 V**	1 x 16 A	**83026**
		400 V	**24 V**	1 x 16 A	**83027**
IP65	160 VA	**230 V**	**24 V**	1 x 16 A	**83076**
		400 V	**24 V**	1 x 16 A	**83077**

PG148095



82026

PG148096



82076

PG148097



83026

PG148098



83076

PratiKa sockets
With interlock switch
Unika series / Installation flexibility

Unique size for 103 x 225 mm

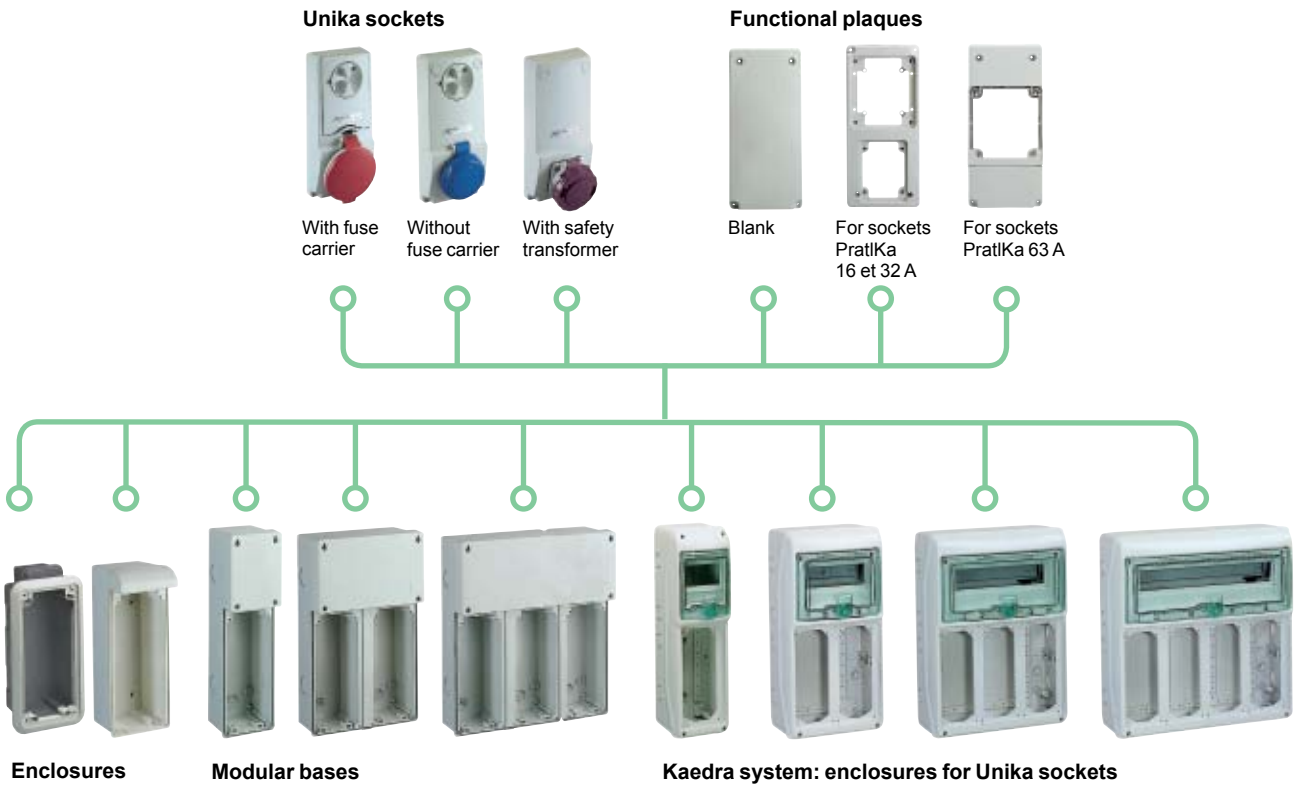

Installation flexibility

The Unika sockets with interlock switch are suitable for wall and embedded mounting or panel mounting. The offer complains a complete range of enclosures for different installation ways: individual emplacement or combination in banks.
Its compact size permits to have panel boards with small overall dimensions.
The Unika sockets are equiped with the new five thread which enables a fast fixing on all enclosures.

PB102257



PB102258



PB102259



PB102260



PB102250



PratiKa sockets
With interlock switch
Unika series / Wall and embedded-box

Technical data

			Wall-mounting box	Embedded box
			These can be fitted either wall-mounted or wall-embedded or in the Unika series interlocked socket panels.	
Main characteristics			**They enable wall-mounted installation of sockets with interlock or sockets with safety transformers. On the upper part there is a section with a small cover intended for increased volumes of wiring.**	**They enable panel-mounted installation of sockets with interlock or sockets with safety transformers.**
Degree of protection	According to IEC 60529		IP65	IP65 (After installation)
	According to EN 62262	Against external mechanical impacts	IK09	IK09
Resistance to fire and abnormal heat	According to IEC 60695-2-11	Glow wire test	750°C	750°C
Complete insulation characteristics	According with EN 60439-1		■	-
Materials			Housing made of self-extinguishing polymer	Housing made of self-extinguishing polymer
			Stainless steel screws	Stainless steel screws
Colour			RAL 7035	RAL 7035 for frame/RAL 7016 for box
Fond			Cable entry from the top	-
			Fair-lead for 25 mm max.diameter cables and conduits	-
			Version with knockout holes M32 mm diam. for association	-
			Supplied with screw head covers	-
Dimensions (L x H x P)			103 x 250 x 70	103 x 235 x 70

Code of wall-mounting box

Degree of protection			Code
IP65	16 - 32 A	With unmarked walls	**83919**
		Walls with knock-outs	**83920**
	63 A		**PKB002**

Code of embedded box

Degree of protection	Code
IP65	**83924**



83919



PKB002



83924

PratiKa sockets
With interlock switch
Unika series / Modular bases

Technical data

			Modular bases
			For wall-mounted fitting in combinations of one or more Unika series interlocked sockets and other PratiKa series sockets.
Main characteristics			**They enable wall-mounted fitting of sockets with interlock or sockets with safety transformers. On the upper part there is a box incorporated designed for easy power feeding and wiring distribution.**
Degree of protection	According to IEC 60529		IP65 (After installation)
	According to EN 62262	Against external mechanical impacts	IK09
Resistance to fire and abnormal heat	According to IEC 60695-2-11	Glow wire test	650°C
Complete insulation characteristics	According with EN 60439-1		■
Materials			Housing made of self-extinguishing polymer
			Stainless steel screws
Colour			RAL 7035
Fond			Cable entry from the top
			Fair-lead for 25 mm max.diameter cables and conduits
			Version with knockout holes M32 mm diam. for association
			Supplied with screw head covers

Code of modular basis

Degree of protection	Dimensions			Number of sockets	Code
	H	W	D		
IP65	350	105	70	1	**83921**
	350	210	70	2	**83922**
	350	315	70	3	**83923**

Code of auxiliary components for modular basis

Description	Code
Association kit M32 for modular basis and boxes with 2 niples and nuts diam. 32 mm	**13934**

Code of functional plaques

For closing the openings 103 x 225 of different Unika and Kaedra system enclosures

Description	Code
Blank plaques ■ Marked for fixing: □ panel mounted straight PratiKa sockets for low and extra-low voltage with flange 65 x 65 mm or 75 x 75 mm □ 1 or 2 devices diam. 22.2 mm.	**13143**
Plaques with 2 openings ■ 1 of 65 x 85 mm for direct fixing of angled PratiKa sockets 16 A 2P+⏚ and 3P+⏚ or domestic sockets ■ 1 of 90 x 100 mm for direct fixing of angled PratiKa sockets 16 A 4P+⏚ and 32 A	**13142**
Plaques with 1 opening ■ 107 x 114 mm for direct fixing of angled or straight PratiKa sockets 63 A	**13144**

PG148091

83921

PG148092

83922

PG148093

83923

13143

13143

1314

13142

17144

13144

PratiKa sockets
With interlock switch
Isoblock series / Wall-mounted version

Technical data

			Protected by fuse carriers	With fuse carriers and warning device
			Thanks to their high performances they are intended for installation in environments where there are aggressive chemical agents, oils and grease, and frequent jets of water or accidental shocks.	
Main characteristics			**They ensure the control and local isolating of parts of the plant or utilities so as to enable intervention on electrical circuits or machines in total safety.**	
				Each fuse carrier has a LED indicator device, which permits immediate checking on the state of the fuse.
Construction	According to IEC 60309-2-4		IP65	IP65
Degree of protection	According to IEC 60529		IP65	IP65
	According to EN 62262	Against external mechanical impacts	IK10	IK10
Resistance to fire and abnormal heat	According to IEC 60695-2-11	Glow wire test	850°C	850°C
Operating voltage (400 V)	Rated current	16 A	20 A (AC22) / 9.5 kW (AC23A) IEC 60947-3	20 A (AC22) / 9.5 kW (AC23A) IEC 60947-3
		32 A	32 A (AC22) / 16 kW (AC23A) IEC 60947-3	32 A (AC22) / 16 kW (AC23A) IEC 60947-3
		63 A	63 A (AC22) / 30 kW (AC23A) IEC 60947-3	-
The switch can be externally padlocked into position			"0" and "1"	"0" and "1"
Disconnect fuse carriers	Complying with IEC 60269		For CH 10,3 x 38	For CH 10,3 x 38 each fitted with LED warning light: ■ red and green LED off: socket unit with no power - switch open ■ green LED: regular power supply to the phase ■ red and green LED: signal of protection being triggered
Access lid to fuse curriers can be opened			Only with the switch in position "0"	Only with the switch in position "0"
Fuses not supplied			■	■
Materials			Housing made of self-extinguishing polymer	Housing made of self-extinguishing polymer
			Screws, pins and springs made of stainless steel	Screws, pins and springs made of stainless steel
Colour			RAL 7035	RAL 7035
Wall-mounted version			Cable entry from the top	Cable entry from the top
			Complete with fair-lead for 25 mm Max. Diameter cables and conduits, and/or: ■ PG21 cable gland for 16 A and 32 A ■ PG29 for 63 A	Complete with fair-lead for 25 mm Max. Diameter cables and conduits, and/or PG21 cable gland
Connection terminals			Captive screw	Captive screw

Connection

	Protected by fuse carriers	With fuse carriers and warning device
Rating	**Maximum cross section of conductors**	
16 A and 32 A	10 mm²	10 mm²
63 A	35 mm²	-

Code of Isoblock sockets

Rating		Type	Rated voltage											
			100 - 130 V			200 - 250 V			380 - 415 V			480 - 500 V		
Poles and wires			2P + ⏚	3P + ⏚	3P+N + ⏚	2P + ⏚	3P + ⏚	3P+N + ⏚	2P + ⏚	3P + ⏚	3P+N + ⏚	2P + ⏚	3P + ⏚	3P+N + ⏚
With fuse carriers 10.3 x 38														
IP65	16 A	B16	**83451**	**83452**	**83453**	**83454**	**83455**	**83456**	**83457**	**83458**	**83459**	-	**83461**	**83462**
	32 A	B16	**83463**	**83464**	**83465**	**83466**	**83467**	**83468**	**83469**	**83470**	**83471**	-	**83473**	**83474**
With fuse carriers 10.3 x 38 and warning device														
IP65	16 A	B16	-	-	-	**83354**	-	-	-	**83358**	**83359**	-	-	-
	32 A	B16	-	-	-	**83366**	-	-	-	**83370**	**83371**	-	-	-
With fuse carriers E33														
IP65	63 A	B32/63	-	**82876**	**82877**	**82878**	**82879**	**82880**	-	**82882**	**82883**	-	**82885**	**82886**

PG148058

83454

PG148063

83471

PG148047

82883

PG148050

83354

PG148055

83371

PratiKa sockets
With interlock switch
Isoblock series / Wall-mounted version

Technical data

			With DIN rail	With safety transformer SELV
			Thanks to their high performances they are intended for installation in environments where there are aggressive chemical agents, oils and grease, and frequent jets of water or accidental shocks.	For use either singly or in combination units by means of the Isoblock sectional panels, in environments where there are aggressive chemical agents, oils, grease, frequent, heavy jets of water and accidental shocks.
Main characteristics			**They have a DIN rail for modular protection devices.**	**These enable powering of circuits with a voltage rating of 50 V maximum, to protect users against direct and indirect contacts, in conformity with IEC364 standards.**
Construction	According to IEC 60309-2-4		IP65	IP65
Degree of protection	According to IEC 60529		IP65	IP65
	According to EN 62262	Against external mechanical impacts	IK10	IK10
Resistance to fire and abnormal heat	According to IEC 60695-2-11	Glow wire test	850°C	850°C
The unit is rated	According to IEC 60558-2-6		-	Class II
Operating voltage (400 V)	Rated current (according to IEC 60947-3)	16 A	20 A (AC22) / 9.5 kW (AC23A)	-
		32 A	32 A (AC22) / 16 kW (AC23A)	-
		63 A	63 A (AC22) / 30 kW (AC23A)	-
Operating voltage		160 VA	-	230/24 V or 400/24 V
Rated power of safety transformer			-	160 VA under continuous use
Transformer protected against short-circuit			-	By CH10,3x38 the cylindrical fuses supplied
Power supply switch on the primary controlled			-	By a special mechanism upon the insertion of the plug
The switch can be externally padlocked into position			"0" and "1"	-
Access lid to fuse curriers can be opened			Only with the switch in position "0"	-
Compartement for modular devices fitted with symmetrical DIN rail		16 A and 32 A	With opening of 4.5 modules (18 mm)	-
		32 A and 63 A	With opening of 6 modules (18 mm)	-
Fitted with one or two very-low voltage sockets			-	24 V, 2P
Materials			Housing made of self-extinguishing polymer	Housing made of self-extinguishing polymer
			Screws, pins and springs made of stainless steel	Screws, pins and springs made of stainless steel
Colour			RAL 7035	RAL 7035
Wall-mounted version			Cable entry from the top	-
			Complete with fair-lead for 25 mm Max. Diameter cables and conduits, and/or: ■ PG21 cable gland for 16 A and 32 A ■ PG29 for 63 A	Complete with fair-lead for 25 mm Max. Diameter cables and conduits, and/or PG21 cable gland
Connection terminals			Captive screw	Captive screw

Connection

	With DIN rail	With safety transformer SELV
Rating	**Maximum cross section of conductors**	
16 A and 32 A	10 mm²	-
63 A	35 mm²	-
160 VA	-	6 mm²

Code of Isoblock sockets

Rating		Type	Rated voltage											
			100 - 130 V			200 - 250 V			380 - 415 V			480 - 500 V		
Poles and wires			2P + ⏚	3P + ⏚	3P+N + ⏚	2P + ⏚	3P + ⏚	3P+N + ⏚	2P + ⏚	3P + ⏚	3P+N + ⏚	2P + ⏚	3P + ⏚	3P+N + ⏚
With DIN rail - 4.5 modules														
IP65	16 A	B16	82751	82752	82753	82754	82755	82756	82757	82758	82759	-	82761	82762
	32 A	B16	83788	83789	83790	83791	83792	83793	83794	83795	83796	-	83797	83798
With DIN rail - 6 modules														
IP65	32 A	B32/63	82763	82764	82765	82766	82767	82768	82769	82770	82771	-	82773	82774
	63 A	B32/63	-	82776	82777	82778	82779	82780	-	82782	82783	-	82785	82786

Code of Isoblock sockets with safety transformer SELV

Rated power		Rated voltage		Number and type of sockets	Code
		Primary	Secondary		
IP65	160 VA	230 V	24 V	1 x 16 A	82061
		400 V	24 V	1 x 16 A	82063
	160 VA	230 V	24 V	2 x 16 A	82062
		400 V	24 V	2 x 16 A	82064



82754



82771



82783



82061



82062

PratiKa sockets
With interlock switch
Isoblock series / Modular panels

Technical data

			Modular panels
			For the installation of Isoblock series interlocked sockets in environments where there are aggressive chemical agents, oils and grease, frequent, heavy jets of water or accidental shocks
Main characteristics			**These enable wall-mounted fitting of sockets with interlock or safety transformers and are available in two versions: ■ version with integrated box designed to enable power feeding and wiring distribution ■ version with control box designed to accommodate one or more modular protection devices fitted to the symmetrical DIN rail.**
Construction	According to IEC 60670-1		IP65
Degree of protection	According to IEC 60529		IP65
	According to EN 62262	Against external mechanical impacts	IK10
Resistance to fire and abnormal heat	According to IEC 60695-2-11	Glow wire test	850°C
Complete insulation characteristics	According with EN 60439-1		■
Materials			Housing made of self-extinguishing polymer
			Screws made of stainless steel
			Walls with knoch our loch for cable entry from the top and for association
Colour			RAL 7035

Code for modular panels with junction boxes

Type	Dimensions			Number of sockets	Code
	H	W	D		
B16	535	111	11 + 65	1	**83925**
2B16	535	222	17 + 100	2	**83926**
B32/63	535	151	17 + 100	1	**83927**

Code for modular panels with modular enclosures

Type	Module	Dissipated power	Dimensions			Number of sockets	Code
	18 mm		H	W	D		
B16	4	9 watt	535	111	11 + 65	1	**83325**
2B16	10	14 watt	535	222	17 + 100	2	**83326**
B32/63	6	11 watt	535	151	17 + 100	1	**83327**

PG148107

83925

PG148109

83926

PG148108

83927

PG148104

83325

PG148106

83326

PG148105

83327

PratiKa sockets

With interlock switch

Isoblock series / Sockets with circuit breaker and electrical interlock

Technical data

			Sockets with circuit breaker and electrical interlock
			These are characterized by a thermal-magnetic circuit breaker, with or without earth-fault protection which is activated only when the plug is fully inserted in the socket. If the plug is removed while under load, the circuit breaker will trip automatically.
Main characteristics			
Degree of protection	According to IEC 60529		IP65
	According to EN 62262	Against external mechanical impacts	IK08
Resistance to fire and abnormal heat	According to IEC 60695-2-11	Glow wire test	960°C
Moulded case automatic thermal-magnetic circuit breaker			With or without differential relay
Rotary switch which can be externally padlocked into position			"0" and "1"
Reset of the switch			From the outside when triggered
Socket fitted with pilot contact			For controlling the 24 V electrical interlock
Earth fault protection		Sensitivity (IΔn)	Adjustable 0.03 - 0.3 - 1 - 3 - 10 A
		Time delay	Adjustable 0 - 60 - 150 - 310 ms
Red warning light			Signal tripping of earth fault protection
Materials			Housing made of self-extinguishing polymer
			Screw made of thermoplastic material
Colour			RAL 7035
Connection terminals			Captive screw
			Cable entry from the top
			Complete with thickness flange and PG42 cable gland
			Terminal block guard at the circuit breaker entry

Connection

Rating	Sockets with circuit breaker and electrical interlock Maximum cross section of conductors
63 A and 125 A	95 mm²

■ Scheme with thermal magnetic circuit breaker

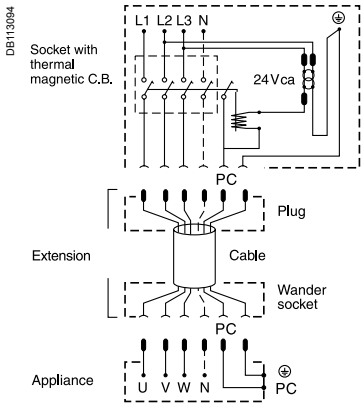

■ Scheme with thermal magnetic circuit breaker and earth fault protection

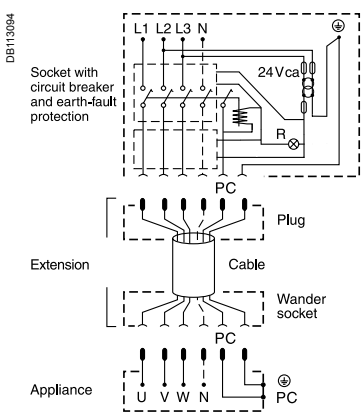

Circuit breaker characteristics

Rated current (In)	Tripping thresholds		Ultimate breaking capacity (kA rms)		
	Thermal (tr)	Magnetic (tm)	220/240V	380/415V	500V
63 A	Adjustable 0.8... 1 x In	500 A	85	36	30
125 A		1250 A	85	36	30

Code for interlocked socket

Rating		Rated voltage							
		100 - 130 V		200 - 250 V		380 - 415 V		480 - 500 V	
Poles and wires		3P + ⏚	3P+N + ⏚	3P + ⏚	3P+N + ⏚	3P + ⏚	3P+N + ⏚	3P + ⏚	3P+N + ⏚
With thermal-magnetic circuit breaker									
IP65	63 A	-	-	**82479**	-	**82482**	**82483**	**82485**	-
	125 A	-	-	**82491**	-	**82494**	**82495**	**82497**	-
With thermal-magnetic circuit breaker and earth fault protection									
IP65	63 A	-	-	-	-	**82432**	**82433**	-	-
	125 A	-	-	-	-	**82444**	**82445**	-	-

PB102180



82482