Product data sheet
Characteristics

TM5C24D18T
compact I/O expansion block TM5 - 42 I/O - 24 DI - 18 DO transistor

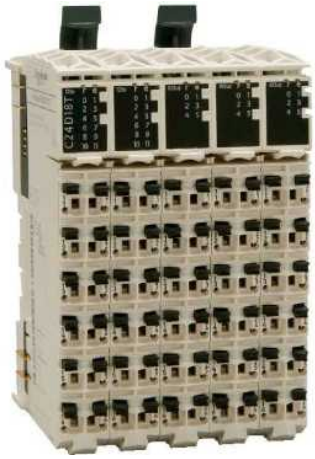

Main

Range of product	Modicon TM5
Product or component type	Compact I/O expansion block

Complementary

Enclosure material	Plastic
Colour	White
Input/Output number	42
For enclosure nominal dimensions	24 I + 18 O
Number of modules	3 modules with 6 digital output 2 modules with 12 digital input
Discrete input number	24
Discrete input voltage	24 V
Discrete input voltage type	DC
Input voltage limits	20.4...28.8 V
Discrete input logic	Sink
Discrete input current	3.75 mA
Input impedance	6.4 kOhm
Analogue input number	0
Discrete output number	18
Discrete output type	Transistor
Wiring mode	2-wire discrete output 1 wire discrete input
Output voltage	24 V DC
Output voltage limits	20.4...28.8 V DC
Discrete output logic	Source
Discrete output current	0.5 A per output
Peak output current	<= 9 A
Voltage state 0 guaranteed	<= 5 V
Voltage state 1 guaranteed	>= 15 V
Input filtering	0...25 ms configurable by software <= 100 µs hardware
Response time	<= 300 µs from state 1 to state 0 output <= 300 µs from state 0 to state 1 output
Leakage current	5 µA when switched off output
Isolation	No insulation between channels 500 Vrms AC insulation between channel and bus
Voltage drop	<= 0.3 V at 500 mA output
Current consumption	140 mA 24 V DC input/output 70 mA 5 V DC bus
Power dissipation in W	<= 3.71 W

The information provided in this documentation contains general descriptions and/or technical characteristics of the performance of the products contained herein.
This documentation is not intended as a substitute for and is not to be used for determining suitability or reliability of these products for specific user applications.
It is the duty of any such user or integrator to perform the appropriate and complete risk analysis, evaluation and testing of the products with respect to the relevant specific application or use thereof.
Neither Schneider Electric Industries SAS nor any of its affiliates or subsidiaries shall be responsible or liable for misuse of the information contained herein.

Local signalling	18 LEDs yellow output status 24 LEDs green input status 5 LEDs red power supply 5 LEDs green power supply
Electrical connection	Removable spring terminal block
Marking	CE
Surge withstand	1 kV common mode 24 V DC EN/IEC 61000-4-5 0.5 kV differential mode 24 V DC EN/IEC 61000-4-5
Electromagnetic compatibility	EN/IEC 61000-4-6
Disturbance radiated/conducted	CISPR11

Environment

Standards	CSA 22-2 No 142 IEC 61131-2 UL 508 CSA 22-2 No 213
Product certifications	CSA C-Tick CULus GOST-R
Ambient air temperature for operation	-10...60 °C horizontal installation -10...50 °C vertical installation
Ambient air temperature for storage	-40...70 °C
Relative humidity	5...95 % without condensation
IP degree of protection	IP20 IEC 61131-2
Pollution degree	2 IEC 60664
Operating altitude	0...2000 m
Storage altitude	0...3000 m
Vibration resistance	3.5 mm 5...8.4 Hz DIN rail 1 gn 8.4...150 Hz DIN rail
Shock resistance	15 gn 11 ms
Resistance to electrostatic discharge	8 kV in air EN/IEC 61000-4-2 4 kV on contact EN/IEC 61000-4-2
Resistance to electromagnetic fields	10 V/m 80...2000 MHz EN/IEC 61000-4-3 1 V/m 2...2.7 GHz EN/IEC 61000-4-3
Resistance to fast transients	2 kV power lines EN/IEC 61000-4-4 1 kV shielded cable EN/IEC 61000-4-4 1 kV I/O EN/IEC 61000-4-4
Mounting support	DIN rail
Product weight	0.24 kg

Not classified

Max current	9000 mA loads on I/O power segment

Offer Sustainability

Sustainable offer status	Not Green Premium product
RoHS	Compliant - since 1039 - Schneider Electric declaration of conformity download declaration of conformity

TM5C24D18T

TM5 Compact I/O Module

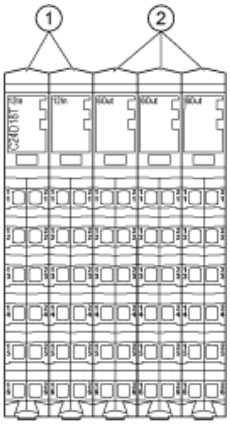

N°	Designation
1	Input electronic module / 12 digital inputs
2	Output electronic module / 6 digital outputs

Compact I/O Module

Dimensions

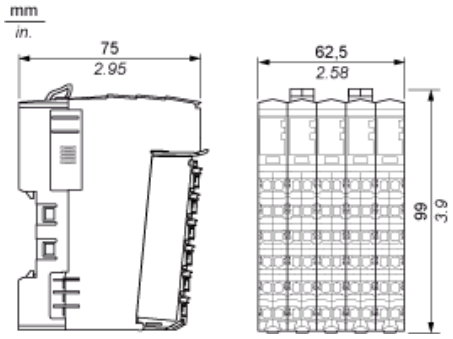

TM5 System

Spacing Requirements

mm
in.

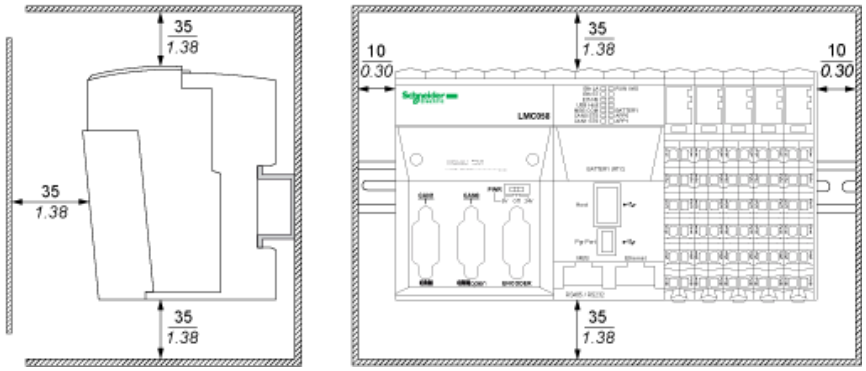

Mounting on a DIN Rail

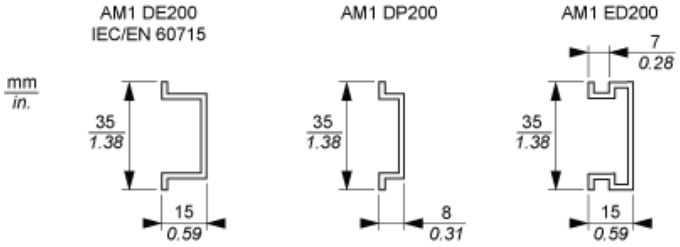

TM5 System Wiring Recommendations

Wire Sizes to Use with the Removable Spring Terminal Blocks

mm / in.				
mm²	0,08...2,5	0,25...2,5	0,25...1,5	2 x 0,25...2 x 0,75
AWG	28...14	24...14	24...16	2 x 24...2 x 18

Digital Input 12In

Wiring Diagram

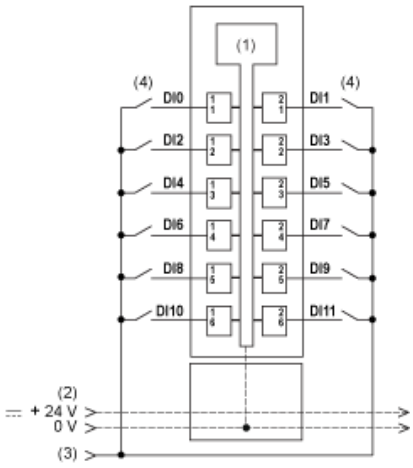

1 Internal electronics
2 24 Vdc I/O power segment integrated into the bus bases
3 24 Vdc I/O power segment by external connection
4 2-wire sensor

Digital Output 6Out

Wiring Diagram

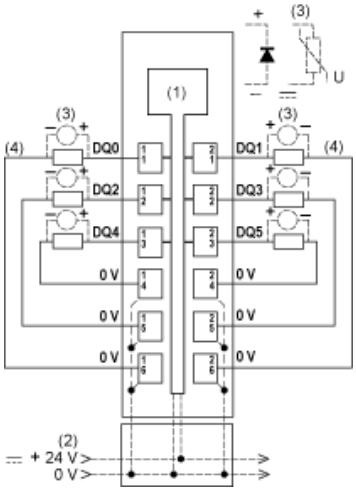

1 Internal electronics
2 24 Vdc I/O power segment integrated into the bus bases
3 Inductive load protection
4 2-wire load

Switching Inductive Load Characteristics

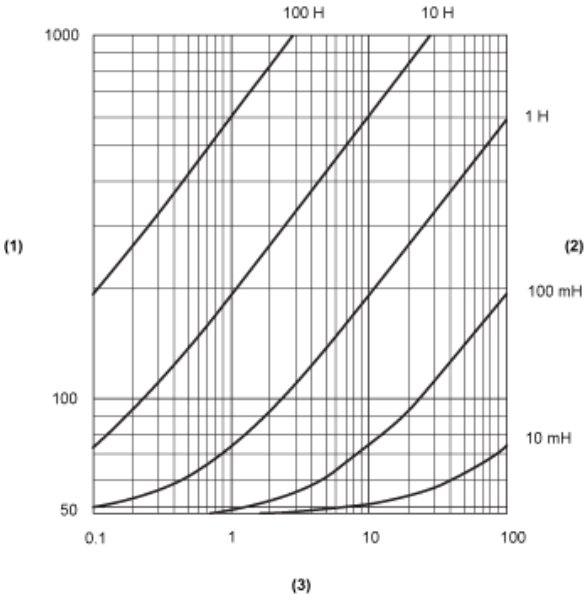

(1) Load resistance in Ω
(2) Load inductance in H
(3) Max. operating cycles / second