

Acoustic device, 24V, continuous or pulsed tone

Part no. SL7-AP24
Article no. 171281
Catalog No. SL7-AP24

Powering Business Worldwide

Delivery programme

Product range			SL7 signal towers
Basic function			Acoustic module
Degree of Protection			IP66
Rated operational voltage	U_e	V	24 V AC/DC
Rated operational current	I_e	mA	92
Description			Continuous tone or pulsed tone, adjustable with internal dip switches. Sound pressure 100 db, adjustable with internal potentiometer. f = 2800 Hz Place only at the highest position on a pole
Colour			
			
Function			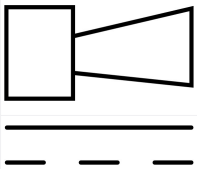
Connection to SmartWire-DT			no

Technical data

General

Standards			IEC/EN 60947-5-1
Climatic proofing			Damp heat, constant, to IEC 60068-2-78 Damp heat, cyclic, to IEC 60069-2-30
Mounting position			As required
Mechanical shock resistance		g	> 15 according to IEC 60068-2-27 Shock duration 11 ms Sinusoidal
IEC degree of protection			IP66 IEC/EN 60529
Protection type UL			Type 4, 4X, 13
Material			Enclosure: Polycarbonate (PC), black Cap: Polycarbonate (PC)
Ambient temperature		°C	-30 - +60
Weight		g	102

Contacts

Rated impulse withstand voltage	U_{imp}	V AC	4000
Rated insulation voltage	U_i	V	250
Overvoltage category/pollution degree			III/3

modules

Leakage current		A	< 0.003
Type of tone			Continuous or pulsed tone
Types of sound			2 versions, table of sound types
Sound setting			Internal; 1 pole DIP
Table of sound types			**Table of sound types**

Sound type	DIP switch settings	Frequency	Diagram	Repeat rate	Special application	Max. volume
		Hz				dB

			SL7-AP…	Continuous tone	approx. 2800	-	-	100
				Pulsed tone	approx. 2800	approx. 2 Hz	-	100

Sound pressure	dB	100
Sound pressure level adjustment		Built-in, potentiometer
Sound_pressure_can_be_lowered_to_a_minimum_of		88 dB
Transmission angle		360°
Current-/power consumption		
24 V AC/DC	A	0.092
Voltage levels		24 V AC/DC ± 10 %

Technical data ETIM 5.0

Low-voltage industrial components (EG000017) / Acoustic module for signal tower (EC001261)		
Electric engineering, automation, process control engineering / Low-voltage switch technology / Command and alarm device / Signal column element, acoustic (ecl@ss8-27-37-12-37 [AKF055010])		
Function		Continuous tone/pulse tone
Outer diameter	mm	73
Degree of protection (IP)		IP66
Colour		Black
Operating voltage at AC 50 Hz	V	24 - 24
Operating voltage at AC 60 Hz	V	24 - 24
Operating voltage at DC	V	24 - 24
Voltage type		AC/DC
Tone adjustable		Yes

Approvals

Product Standards		IEC/EN 60947-5-1; UL 508; CSA-C22.2 No. 14-10; CSA-C22.2 No. 94-91; CE marking
UL File No.		E29184
UL Category Control No.		NKCR
CSA File No.		UL report applies to both US and Canada
CSA Class No.		NKCR7
North America Certification		UL listed, certified by UL for use in Canada
Degree of Protection		UL Type 4, 4X, 13

Dimensions

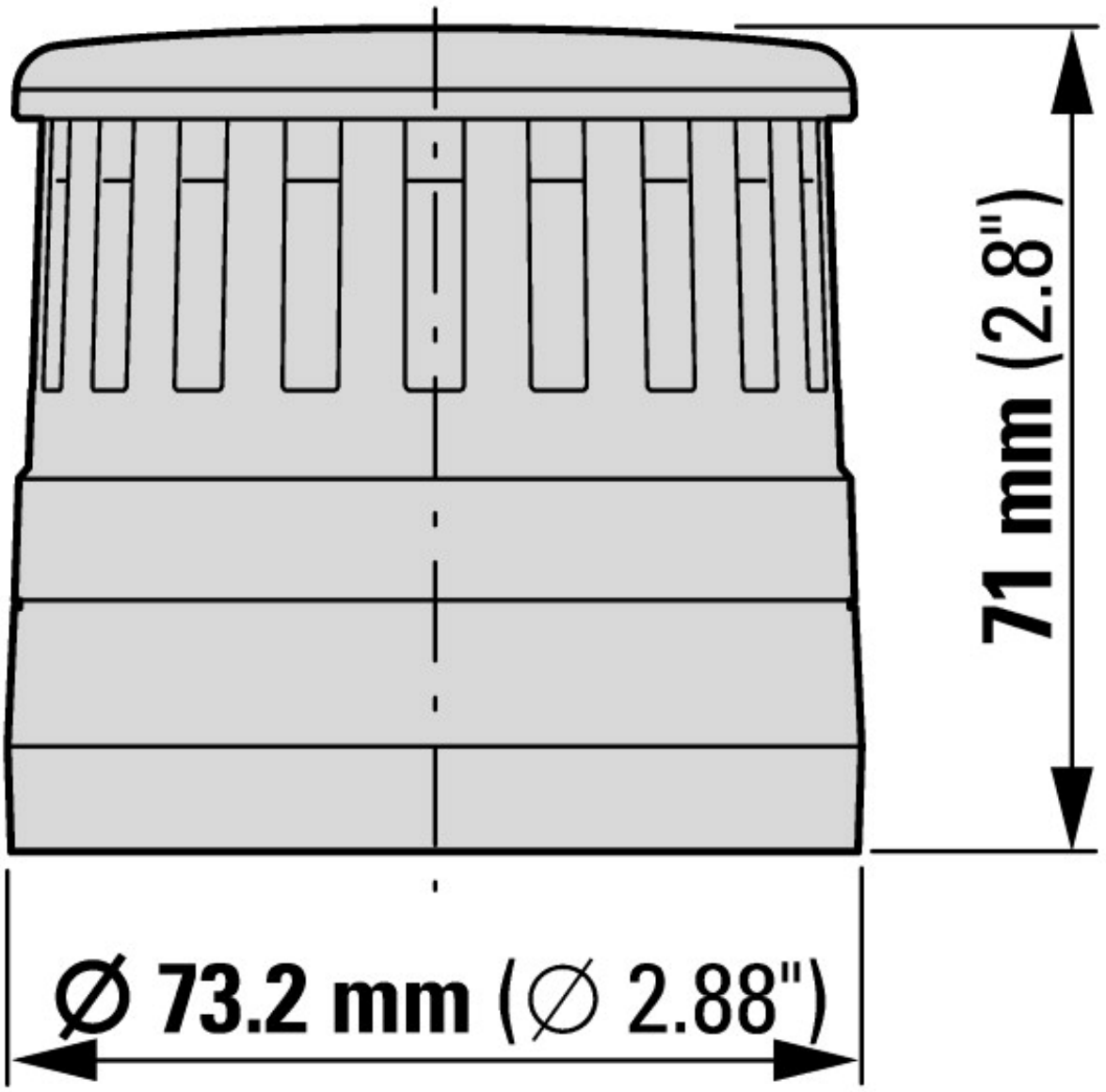

Additional product information (links)

IL047004ZU SL7 Light Modules, Tone Modules	
IL047004ZU SL7 Light Modules, Tone Modules	ftp://ftp.moeller.net/DOCUMENTATION/AWA_INSTRUCTIONS/IL047004ZU2013_02.pdf
IL047004ZU SL7, modules lumineux, modules sonores	ftp://ftp.moeller.net/DOCUMENTATION/AWA_INSTRUCTIONS/IL047004ZU2013_02.pdf

© 12/2014 by Eaton Industries GmbH