Telequick system

The easiest, fastest and most professional mounting and cabling system



Save up to 30% of your time in the installation process

Schneider Electric

The Telequick system was created to save time and money in the installation process of an enclosure. All the components were designed to simplify the mounting and cabling of components inside the enclosure.

The Telequick system presents many advantages in comparison with the traditional plain mounting plate.



PB501799

- Time saving
- Less weight
- Simple layout modifications
- Professional look
- Improved thermal dissipation

Traditional mounting solution

Several tools are needed, including the waste of time to use them.



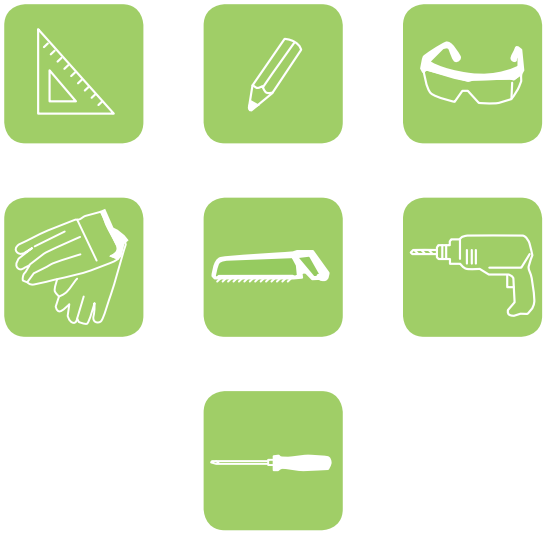

With the Telequick system, the same configuration can be mounted in 30% less time.

Easy to use.

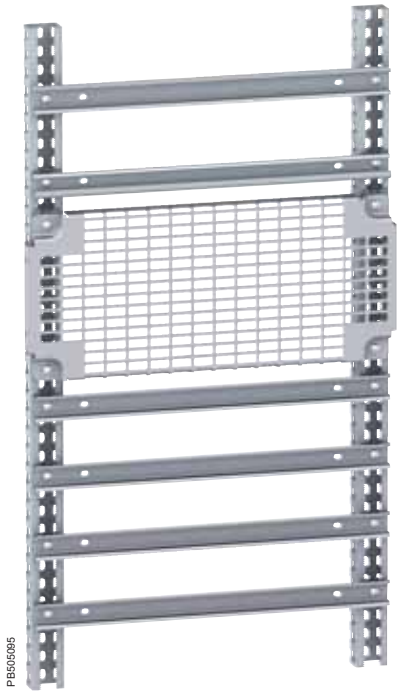





Cost efficiency

Telequick system applied to wall-mounting enclosures

If the versatility is important in a wall-mounting solution, then Telequick is the perfect system.

Beyond the mounting time reduction, once the system is installed inside of a wall-mounting enclosure, it allows you to modify the layout without disassembling the entire mounting system.

Find the corresponding references in the tables starting at page 8.

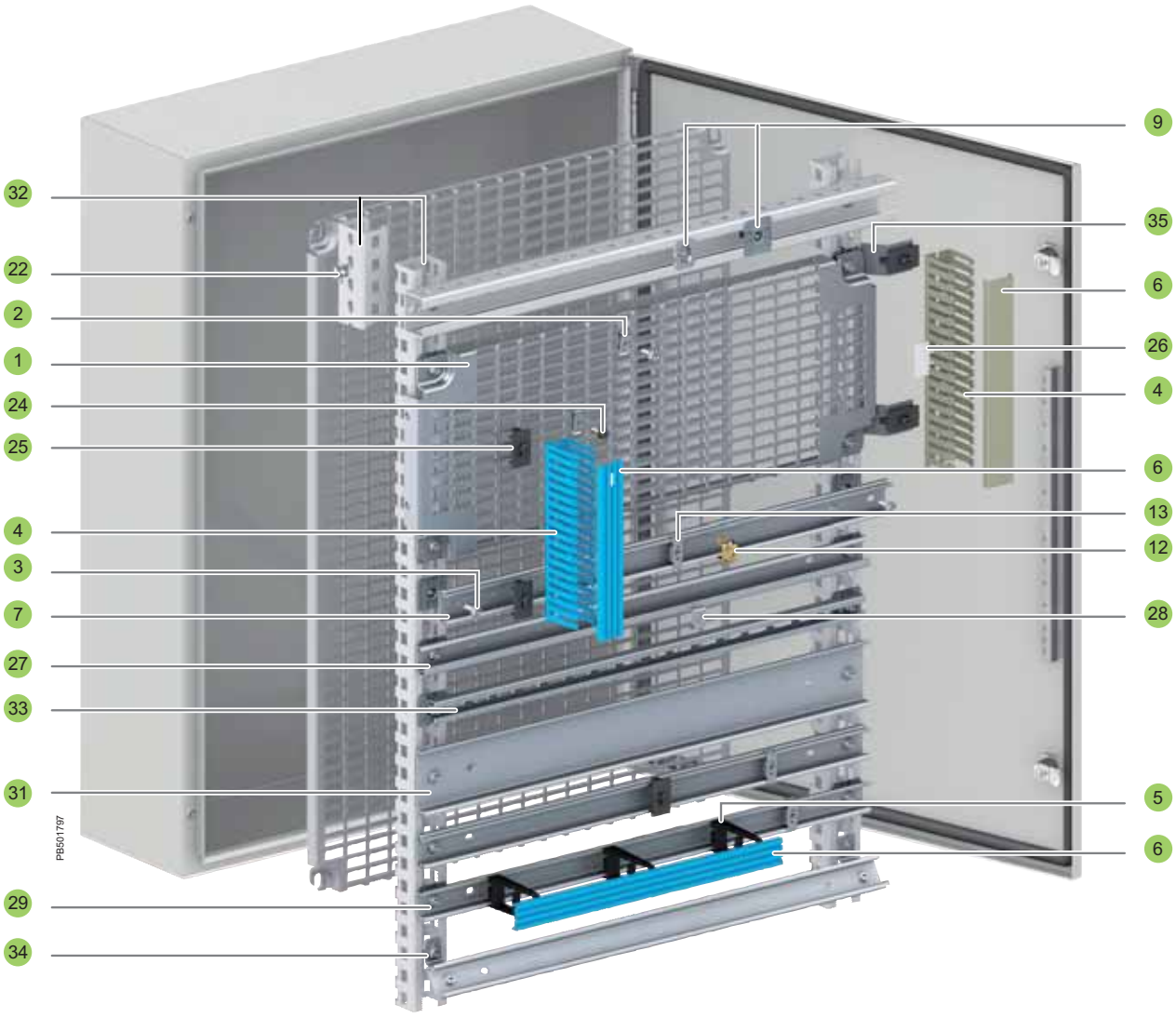

Telequick system applied to floor-standing enclosures

The multiple purpose of a floor-standing enclosure and it's large range of applications are supported by a complete and unlimited mounting system.

If the space and the execution time are important in a floor-standing solution, then Telequick is the best system to optimise it.

Find the corresponding references in the tables starting at page 8.



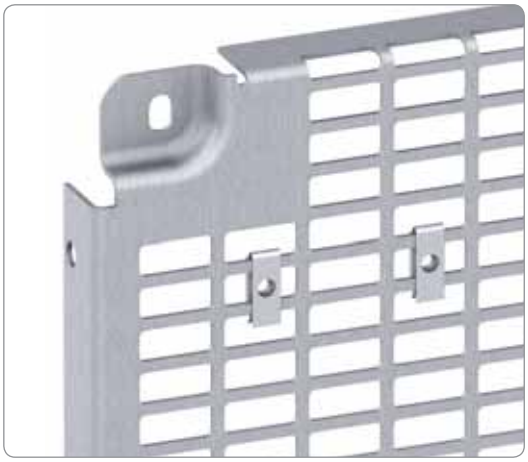
PB501800

Telequick mounting plate and dedicated nut

Quick and easy product fixing without tracings or drillings.

Allows you to adjust the best position even after fixing the product.

Simple and flexible for modifications at any time.

Mounting plates: page 8.
Nuts: page 8.

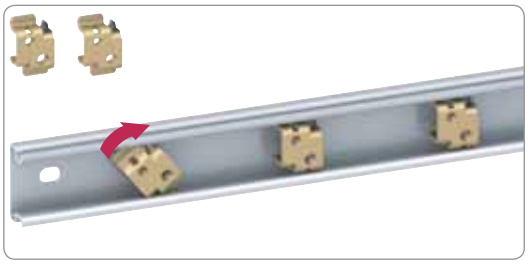
PB501801

Double profile DIN rail and the ¼ turn nuts

The ¼ turn nuts are clicked on the double-profile DIN rails.

Only 2 nut references and 4 types of screws.

Double profile DIN rail: page 10.
¼ turn nuts: page 10.



PB501803

Components are then easily clicked or screwed to the rails and nuts.


PB501802

Thanks to the special design, all mounting parts (rails and plates) have the same depth (15 mm) to facilitate the product installation without any adaptation.

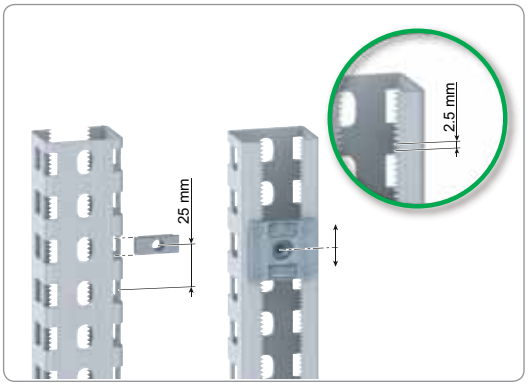

PB501804EN

Technical uprights

Technical uprights are designed to simplify the installation of a mounting chassis.

Technical vertical upright: page 10.
Serrated nuts: page 10.
Caged nuts and removable nuts: page 10.

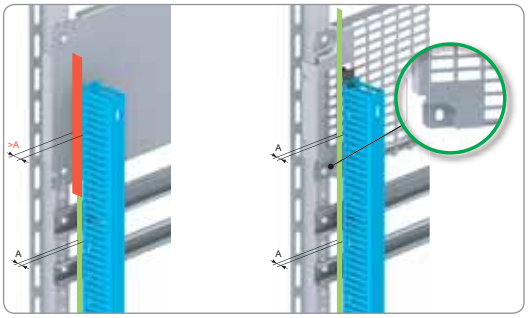

PB501805

With the Telequick system all components are automatically perfectly aligned.

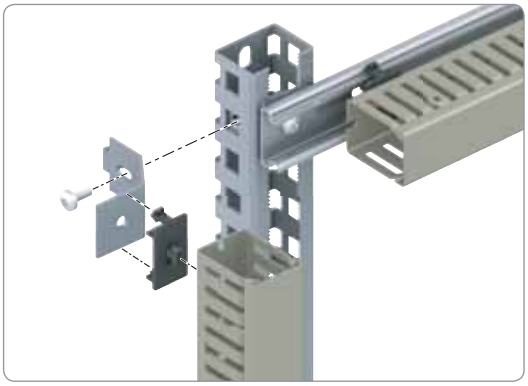
PB501806

Cable ducts and cable duct supports

The cable duct optimises and secures the mounting space by wrapping all cables. It is simple, quick and perfectly aligned to the installation element.

Cable ducts: page 12.
Metal cable duct support: page 12.

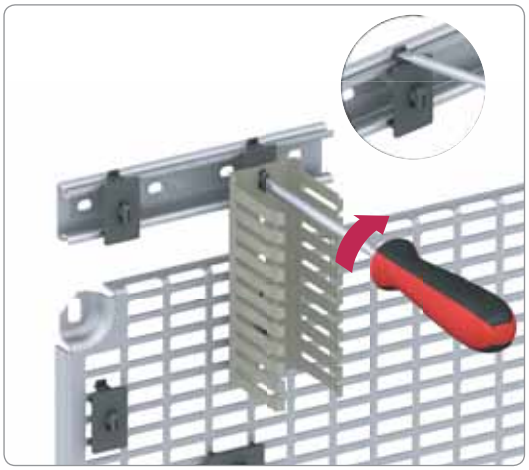
PB501807

Fix the cable duct in a click by using the plastic clip support.

Cable duct clip support: page 12.

Telequick mounting plate for wall-mounting enclosures

> 1

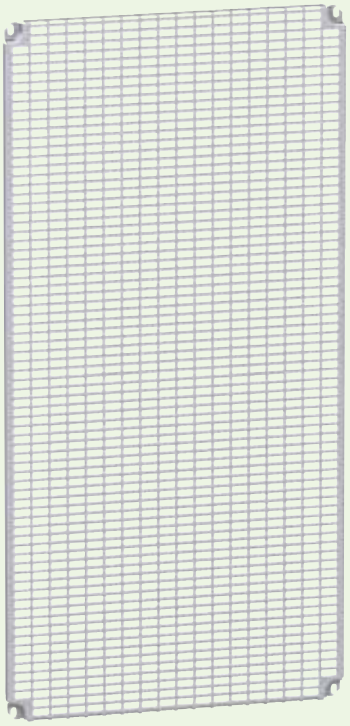

PB501849

> 2



PB501800

Zinc-coated-steel Telequick mounting plates					References
Enclosure dimensions		Mounting plate dimensions			
Height (mm)	Width (mm)	Height (mm)	Width (mm)	Surface (mm)	
300	200	255	153.7	3.3	**NSYMR32**
300	250	253	228	5.1	**NSYMR3025**
300	300	255	251	5.8	**NSYMR33**
300	400	255	351	8.3	**NSYMR34**
400	300	348.7	251	8.1	**NSYMR43**
400	400	345	351	11.5	**NSYMR44**
400	600	345	551	18.4	**NSYMR46**
500	300	453.7	251	10.7	**NSYMR53**
500	400	450	351	15.2	**NSYMR54**
500	500	450	451	19.7	**NSYMR55**
600	400	555	351	18.8	**NSYMR64**
600	500	555	451	24.4	**NSYMR65**
600	600	555	551	29.9	**NSYMR66**
600	800	551	750	40.7	**NSYMR68**
700	500	645	451	28.4	**NSYMR75**
700	600	645	551	35.1	**NSYMR76**
800	600	750	551	40.7	**NSYMR86**
800	800	750	751	55.7	**NSYMR88**
800	1000	751	951	70.8	**NSYMR810**
1000	600	945	551	51.4	**NSYMR106**
1000	800	945	751	70.3	**NSYMR108**
1000	1000	945	951	89.2	**NSYMR1010**
1000	1200	951	1151	108.8	**NSYMR1012**
1200	600	1145	551	62.4	**NSYMR126**
1200	800	1145	751	85.3	**NSYMR128**
1200	1000	1145	951	108.2	**NSYMR1210**
1400	1000	1345	951	127.3	**NSYMR1410**

Clip-on nut for Telequick mounting plate	References
100 clip-on nuts M3	**AF1EA3**
100 clip-on nuts M4	**AF1EA4**
100 clip-on nuts M5	**AF1EA5**
100 clip-on nuts M6	**AF1EA6**

Supply: 100 units.

Telequick mounting plate for floor-standing enclosures

> 1

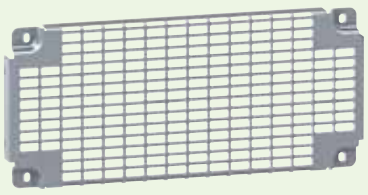

PB501767

> 2



PB501800

Zinc-coated-steel Telequick mounting plates				References
Enclosure dimensions	Fixing points distances			
Width (mm)	Height (mm)	Width (mm)	Surface (mm)	
600	200	450	11.4	**NSYSTMP2260**
600	425	450	22.8	**NSYSTMP4560**
600	575	450	30.4	**NSYSTMP6060**
600	800	450	41.9	**NSYSTMP8260**
800	200	650	15.9	**NSYSTMP2280**
800	425	650	31.8	**NSYSTMP4580**
800	575	650	42.4	**NSYSTMP6080**
800	800	650	58.4	**NSYSTMP8280**
1000	200	850	20.4	**NSYSTMP22100**
1000	425	850	40.8	**NSYSTMP45100**
1000	575	850	54.4	**NSYSTMP60100**
1000	800	850	74.9	**NSYSTMP82100**
1200	200	1050	24.9	**NSYSTMP22120**
1200	425	1050	49.9	**NSYSTMP45120**
1200	575	1050	66.5	**NSYSTMP60120**
1200	800	1050	91.5	**NSYSTMP82120**
1600	Use 2 × 800 mm mounting plate			

Clip-on nut for Telequick mounting plate	References
100 clip-on nuts M3	**AF1EA3**
100 clip-on nuts M4	**AF1EA4**
100 clip-on nuts M5	**AF1EA5**
100 clip-on nuts M6	**AF1EA6**

Supply: 100 units.

Microperforated mounting plate for wall-mounting enclosures

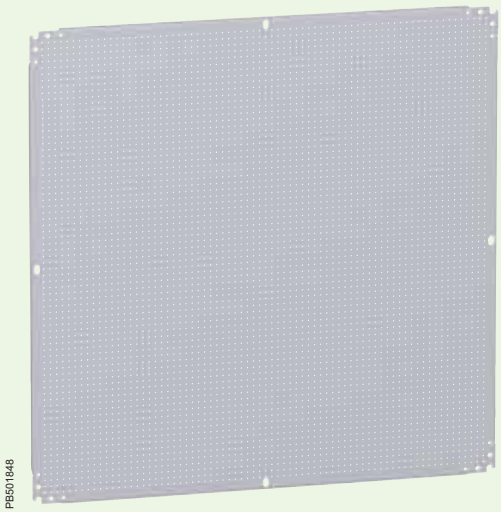

Galvanized-steel microperforated mounting plates					References
Enclosure dimensions		Mounting plate dimensions			
Height (mm)	Width (mm)	Height (mm)	Width (mm)	Surface (mm)	
300	200	250	150	3.8	**NSYMF32**
300	300	250	250	6.3	**NSYMF33**
300	400	250	350	8.8	**NSYMF43***
400	400	350	350	12.3	**NSYMF44**
500	300	450	250	11.3	**NSYMF53**
500	400	450	350	15.8	**NSYMF54**
500	500	450	450	20.3	**NSYMF55**
600	400	550	350	19.3	**NSYMF64***
600	500	550	450	24.8	**NSYMF65**
600	600	550	550	30.3	**NSYMF66**
700	500	550	450	29.3	**NSYMF75**
800	600	750	550	41.3	**NSYMF86***
800	800	750	750	56.3	**NSYMF88**
1000	600	950	550	52.3	**NSYMF106**
1000	800	950	750	71.3	**NSYMF108***
1000	1000	965	965	93.1	**NSYMF1010**
1200	600	1165	565	65.8	**NSYMF125**
1200	800	1165	765	89.1	**NSYMF128**
1200	1000	1165	965	112.4	**NSYMF1210***

* Reversible mounting plate; it can be instaled with inverted dimensions.
Example:
Mounting plate ref: NSYMF64 can be used on the following enclosures:
– H 400 × W 600 mm.
– H 600 × W 400 mm.



Mounting plate elevator to mount the Microperforated mounting plate at the same level as the other Telequick system components.

Supply: 4 units.

Reference
AZ1CA04

Joinable Telequick mounting plate

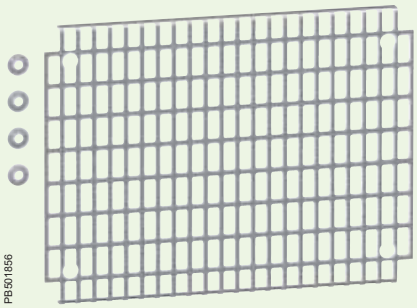

> 2



Enclosure		Mounting plate dimensions			References
Height (mm)	Width (mm)	Height (mm)	Width (mm)	Surface (dm^2)	
60	700	120	734	8,7	**AM1PA0670**
120	700	180	734	13,1	**AM1PA1270**
300	150	349	228	7,9	**AM1PA3015**
300	200	349	258	9,0	**AM1PA3020**
300	500	360	534	19,1	**AM1PA3050**
300	700	360	734	26,3	**AM1PA3070**
400	300	465	334	15,0	**AM1PA4030**
600	400	660	434	28,5	**AM1PA6040**
600	500	660	534	35,1	**AM1PA6050**
600	600	660	634	41,7	**AM1PA6060**
600	700	660	734	48,3	**AM1PA6070**
700	500	765	534	40,0	**AM1PA7050**
800	600	855	634	54,0	**AM1 PA8060**
900	500	960	534	51,1	**AM1PA9050**
900	600	960	634	60,7	**AM1PA9060**
900	700	960	734	70,3	**AM1PA9070**

Clip-on nut for Telequick mounting plate	References
100 clip-on nuts M3	**AF1EA3**
100 clip-on nuts M4	**AF1EA4**
100 clip-on nuts M5	**AF1EA5**
100 clip-on nuts M6	**AF1EA6**



Mounting plate elevator to mount the Joinable Telequick mounting plate at the same level as the other Telequick system components.

Supply: 4 units.

Reference
AZ1CA04

Mounting uprights for wall-mounting enclosures • Supply: 10 uprights


PB500820

> 33

Enclosure height (mm)	References
300	**NSYMDVR3**
400	**NSYMDVR4**
500	**NSYMDVR5**
600	**NSYMDVR6**
700	**NSYMDVR7**
800	**NSYMDVR8**
1000	**NSYMDVR10**
1200	**NSYMDVR12**
3 m	**NSYMDVR3M**


PB501859

Fixing and nuts for aluminium uprights	References
4 fixing brass nuts for fix the upright to the enclosure	**NSYAMCSF**


PB501766

100 sliding nuts M4	**NSYNM4**
100 sliding nuts M5	**NSYNM5**
100 sliding nuts M6	**NSYNM6**

Serrated mounting uprights zinc-coated-steel for floor-standing enclosures • Thickness: 2 mm • Supply: 2 uprights


PB501761

> 32

Enclosure height (mm)	References
750	**NSYTVR7**
1000*	**NSYTVR8**
1000	**NSYTVR10**
1200	**NSYTVR12**
1250	**NSYTVR125**
1400	**NSYTVR14**
1500	**NSYTVR15**
1600	**NSYTVR16**
1800	**NSYTVR18**
2000	**NSYTVR20**
2200	**NSYTVR22**

* For control desks.


PB501762

Fixings and nuts for serrated uprights	Supply	References
Fixing brackets	4	**NSYMFB**

(1) (2)

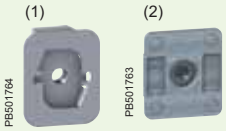
PB501764 PB501763

> 9

(1) 1/4 turn M6 nut	10	**NSYSNM6**
(1) 1/4 turn M8 nut	10	**NSYSNM8**
(2) Serrated 1/4 turn M6 nut	10	**NSYSNSM6**
(2) Serrated 1/4 turn M8 nut	10	**NSYSNSM8**

> 22


PB501765

Removable nut M6	50	**NSYCNM6**
Removable nut M8	50	**NSYCNM8**
Cage nuts M6	50	**NSYCNFM6**
Cage nuts M8	50	**NSYCNFM8**

35 × 15 mm symmetric DIN rail • Supply: 20 units


PB501774

> 29

Enclosure height (mm)	References
Floor-standing 600 mm	**NSYSDR60**
Floor-standing 800 mm	**NSYSDR80**
Floor-standing 1000 mm	**NSYSDR100**
Floor-standing 1200 mm	**NSYSDR120**
Wall-mounting 500 mm	**NSYSDR50A**
Wall-mounting 600 mm	**NSYSDR60A**
Wall-mounting 800 mm	**NSYSDR80A**
Wall-mounting 1000 mm	**NSYSDR100A**


PB501777

> 13

Clip nut for symmetric DIN rail. Supply: 100 units	References
Clip nut M4	**AF1CG4**
Clip nut M5	**AF1CG5**
Clip nut M6	**AF1CG6**

35 mm double profile DIN rail • Supply: 20 units


PB501776

> 7

Enclosure height (mm)	References
Floor-standing 600 mm	**NSYDPR60**
Floor-standing 800 mm	**NSYDPR80**
Floor-standing 1000 mm	**NSYDPR100**
Floor-standing 1200 mm	**NSYDPR120**
Wall-mounting 300 mm	**NSYDPR25**
Wall-mounting 400 mm	**NSYDPR35**
Wall-mounting 500 mm	**NSYDPR45**
Wall-mounting 600 mm	**NSYDPR55**


PB501779

> 12

Quarter turn nut for double profile DIN rail. Supply: 100 units	References
Nut M3 + M4	**AF1CF34**
Nut M5 + M6	**AF1CF56**

35 mm asymmetric DIN rail • Supply: 20 rails


PB501775

> 27

Enclosure height (mm)	References
Floor-standing 600 mm	**NSYADR60**
Floor-standing 800 mm	**NSYADR80**
Floor-standing 1000 mm	**NSYADR100**
Floor-standing 1200 mm	**NSYADR120**


PB501778

> 28

Quarter turn nut for doble profile DIN rail. Supply: 100 nuts	References
Nut M4	**DZ5ME5**
Nut M5	**DZ5ME8**
Nut M6	**DZ5ME9**

75 mm × 2 m mounting rail • Supply: 6 rails


PB501794

> 31

Description	References
75 mm × 2 m mounting rail	**AM1-DL201**

Screws with captive washer, hexagonal head • Supply: 100 units


PB501813

> 3

Description	References
Screws M4 × 10 mm	**AF1VA410**
Screws M4 × 16 mm	**AF1VA416**
Screws M5 × 12 mm	**AF1VA512**
Screws M5 × 18 mm	**AF1VA518**
Screws M6 × 12 mm	**AF1VA612**
Screws M6 × 18 mm	**AF1VA618**
Screws M8 × 20 mm	**AF1VA820**

Universal cross rails • Supply: 2 units


PB501772

> 19

Enclosure height (mm)	Rows	References
300	1	**NSYSUCR4030**
400	1	**NSYSUCR4040**
500	1	**NSYSUCR4050**
600	1	**NSYSUCR4060**
700	1	**NSYSUCR4070**
800	1	**NSYSUCR4080**
900	1	**NSYSUCR4090**
1000	1	**NSYSUCR40100**
1100	1	**NSYSUCR40110**
1200	1	**NSYSUCR40120**
1400	1	**NSYSUCR40140**
1500	1	**NSYSUCR40150**
1600	1	**NSYSUCR40160**
1800	1	**NSYSUCR40180**
2000	1	**NSYSUCR40200**
2200	1	**NSYSUCR40220**
300	2	**NSYSUCR6530**
400	2	**NSYSUCR6540**
500	2	**NSYSUCR6550**
600	2	**NSYSUCR6560**
800	2	**NSYSUCR6580**
1000	2	**NSYSUCR65100**
1200	2	**NSYSUCR65120**
1400	2	**NSYSUCR65140**
1600	2	**NSYSUCR65160**
1800	2	**NSYSUCR65180**
2000	2	**NSYSUCR65200**
2200	2	**NSYSUCR65220**
300	3	**NSYSUCR9030**
400	3	**NSYSUCR9040**
500	3	**NSYSUCR9050**
600	3	**NSYSUCR9060**
700	3	**NSYSUCR9070**
800	3	**NSYSUCR9080**
900	3	**NSYSUCR9090**
1000	3	**NSYSUCR90100**
1100	3	**NSYSUCR90110**
1200	3	**NSYSUCR90120**
1400	3	**NSYSUCR90140**
1500	3	**NSYSUCR90150**
1600	3	**NSYSUCR90160**
1800	3	**NSYSUCR90180**
2000	3	**NSYSUCR90200**
2200	3	**NSYSUCR90220**

Simple cross rails • Supply: 2 units

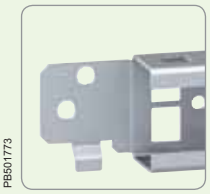
PB501773

Enclosure height (mm)	Rows	References
400	1	**NSYSQCR4040**
500	1	**NSYSQCR4050**
600	1	**NSYSQCR4060**
800	1	**NSYSQCR4080**
1000	1	**NSYSQCR40100**
1200	1	**NSYSQCR40120**
400	2	**NSYSQCR6540**
500	2	**NSYSQCR6550**
600	2	**NSYSQCR6560**
800	2	**NSYSQCR6580**
1000	2	**NSYSQCR65100**
1200	2	**NSYSQCR65120**
400	3	**NSYSQCR9040**
500	3	**NSYSQCR9050**
600	3	**NSYSQCR9060**
800	3	**NSYSQCR9080**
1000	3	**NSYSQCR90100**
1200	3	**NSYSQCR90120**

Enclosure height (mm)	Enclosure width (mm)	References
400	120	**NSYSQCR12040**
500	120	**NSYSQCR12050**
600	120	**NSYSQCR12060**
800	120	**NSYSQCR12080**
1000	120	**NSYSQCR120100**
1200	120	**NSYSQCR120120**

Pre-drilled uprights for joinable mounting plates • Supply: 4 uprights


PB501868

Length (mm)	References
1020	**DZ6MZ121**
1320	**DZ6MZ151**
1620	**DZ6MZ181**
1920	**DZ6MZ211**

Notched clamp nuts for perforated uprights • Supply: 100 nuts

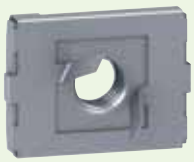
PB501857

Description	References
Notched clamp nut M6	**DZ5MF6**
Notched clamp nut M8	**DZ5MF8**

Blue cable duct body PVC, RAL 5000, 2 m

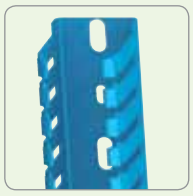
PB501810

> 4

Dimensions		Supply (units)	References
Width (mm)	Height (mm)		
30	35	8	**AK2GA33**
30	55	8	**AK2GA35**
30	90	8	**AK2GA39**
30	144	8	**AK2GA315**
60	55	8	**AK2GA65**
60	90	8	**AK2GA69**
60	144	8	**AK2GA615**

Blue cable duct cover PVC, RAL 5000, 2 m

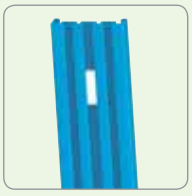
PB501812

> 6

Dimensions	Supply (units)	References
Width (mm)		
30	8	**AK2CA3**
60	8	**AK2CA6**

Grey cable duct body PVC, RAL 7030, 2 m


PB501863

> 4

Dimensions		Supply (units)	References
Width (mm)	Height (mm)		
25	25	8	**AK2GD2525**
25	50	8	**AK2GD2550**
37.5	50	8	**AK2GD3750**
37.5	75	8	**AK2GD3775**
50	50	8	**AK2GD5050**
50	75	8	**AK2GD5075**
75	50	8	**AK2GD7550**
75	75	8	**AK2GD7575**
100	75	8	**AK2GD10075**
125	75	8	**AK2GD12575**

Grey cable duct cover PVC, RAL 7030, 2 m

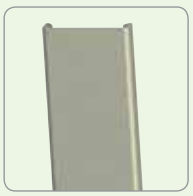
PB501811

> 6

Dimensions	Supply (units)	References
Width (mm)		
25	8	**AK2CD25**
37.5	8	**AK2CD37**
50	8	**AK2CD50**
75	8	**AK2CD75**
100	8	**AK2CD100**
125	8	**AK2CD125**

Cable duct fixings


PB501790

> 25


PB501791

> 24

Description	Supply (units)	References
Plastic clip base	20	**NSYSPC**
Plastic head srew	100	**NSYSM10M5HP**

Cable duct fixings


PB501789

> 35


PB501788

Description	Supply (units)	References
Cable duct support installed on technical upright	10	**NSYCDS**
Cable duct support associated with ∅ 22 mm elements (control and signal units)	10	**NSYSPCP**

Terminal block rail supports 45° ●
Supply: 2 supports


PB501769

Description	References
2 terminal block rail supports 45°	**NSYEDCO**

> 34

Lyre-shaped clamps polyamide 6.6


PB501792

Description	Supply (units)	References
For mounting plate	10	**AK2LA39**
For symmetric DIN rail 90 × 2.5 mm	10	**AK2LD01**
For symmetric DIN rail 75 × 2.5 mm	10	**AK2LD02**

> 5

Fixing for corrugated tube polyamide (PA)


PB501785

Diameter	Supply (units)	References
17 mm	10	**NSYCPTS17**
29 mm	10	**NSYCPTS29**
37 mm	10	**NSYCPTS37**
50 mm	10	**NSYCPTS50**

> 38

Corrugated cable-gland tube (LDPE) black


PB501784

Diameter	Supply (units)	References
17 mm	25	**NSYCPT17**
29 mm	25	**NSYCPT29**
37 mm	25	**NSYCPT37**
50 mm	25	**NSYCPT50**

Label for cable duct polycarbonate


PB501793

Description	Supply (units)	References
Transparent clic label	50	**NSYCDL**

> 26

NOTES

Make the most of your energy

www.schneider-electric.com

Schneider Electric Industries SAS

35, rue Joseph Monier
CS 30323
F- 92506 Rueil Malmaison Cedex

RCS Nanterre 954 503 439
Capital social 896 313 776 €
www.schneider-electric.com

As standards, specifications and designs change from time to time, please ask for confirmation of the information given in this publication.

Printed on ecological paper

Publication: Schneider Electric
Design-Layout: Tecfa

UE11MK08en

11-2011

© 2011 - Schneider Electric - All rights reserved