

Complete 24-V LED RYG, incl. 100-mm base

Part no.	**SL7-100-L-RYG-24LED**
Article no.	**171425**
Catalog No.	**SL7-100-L-RYG-24LED**

Powering Business Worldwide

Delivery programme

Product range			SL7 signal towers
Basic function			Complete devices
Rated operational voltage	U_e	V	24 V AC/DC
Description			Base module with foot and 100 mm tube Continuous light
Type of light			Continuous light
Light elements			LED
Number of modules			3
Colour			
			red, yellow, green
			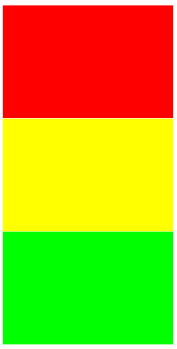
Function			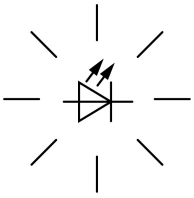
Connection to SmartWire-DT			no

Technical data

General

Standards			IEC/EN 60947-5-1
Climatic proofing			Damp heat, constant, to IEC 60068-2-78 Damp heat, cyclic, to IEC 60069-2-30
Mounting position			As required
Mechanical shock resistance		g	> 15 according to IEC 60068-2-27 Shock duration 11 ms Sinusoidal
IEC degree of protection			IP66 IEC/EN 60529
Protection type UL			Type 4, 4X, 13

Material			Enclosure: Polycarbonate (PC), black Cap: Polycarbonate (PC)
Cap colour			
			red, yellow, green
Ambient temperature		°C	-30 - +60
Terminal capacity			
Solid or flexible conductor		mm^2	0.13 - 2.5
Flexible with ferrule with plastic collar		mm^2	0.25 - 1.5
			AWG 24 - AWG 14

Contacts

Rated impulse withstand voltage	U_{imp}	V AC	4000
Rated insulation voltage	U_i	V	250
Overvoltage category/pollution degree			III/3

modules

Type of light			Continuous light
Light elements			LED
Leakage current		A	< 0.003
			The value specified for the leakage current shall apply per module.
lifespan		h	> 100000
Transmission angle			360°
Current-/power consumption			
24 V AC/DC		A	0.049 - 0.054
			The value specified for the current consumption at 24 VAC/DC applies to each module.
Voltage levels			24 V AC/DC ± 10 %

Technical data ETIM 5.0

Low-voltage industrial components (EG000017) / Signal tower complete (EC001042)			
Electric engineering, automation, process control engineering / Low-voltage switch technology / Command and alarm device / Signal tower complete (ecl@ss8-27-37-12-30 [AKF048010])			
Number of signal tower elements			3
Flashlight			No
Continuous light			Yes
Flashing light			No
Function acoustic			No
Voltage type for actuating			AC/DC
Degree of protection (IP)			IP66
Rated operating voltage Ue		V	24 - 24
Outer diameter		mm	73

Approvals

Product Standards			IEC/EN 60947-5-1; UL 508; CSA-C22.2 No. 14-10; CSA-C22.2 No. 94-91; CE marking
UL File No.			E29184
UL Category Control No.			NKCR
CSA File No.			UL report applies to both US and Canada
CSA Class No.			NKCR7
North America Certification			UL listed, certified by UL for use in Canada
Degree of Protection			UL Type 4, 4X, 13

Dimensions

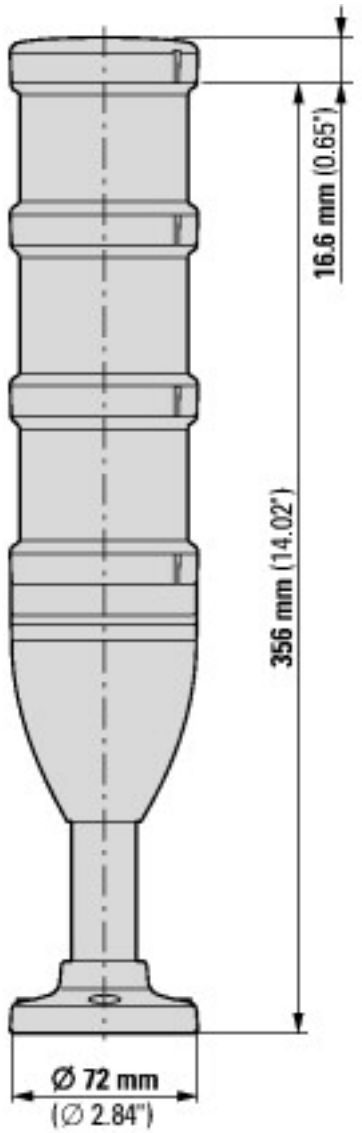

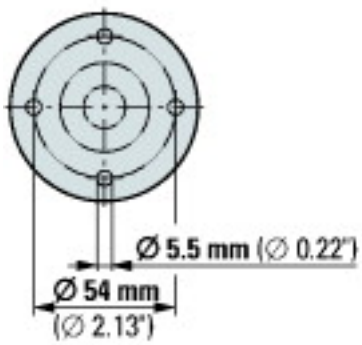

Additional product information (links)

IL047004ZU SL7 Light Modules, Tone Modules	
IL047004ZU SL7 Light Modules, Tone Modules	ftp://ftp.moeller.net/DOCUMENTATION/AWA_INSTRUCTIONS/IL047004ZU2013_02.pdf
IL047004ZU SL7, modules pour allumage, modules avertisseur sonore	ftp://ftp.moeller.net/DOCUMENTATION/AWA_INSTRUCTIONS/IL047004ZU2013_02.pdf
Declaration of conformity	ftp://ftp.moeller.net/DOCUMENTATION/DECLARATIONS/00001508.pdf

© 12/2014 by Eaton Industries GmbH