

Circuit-breaker, 4 p, 250A

Part no. LZMC2-4-A250-I
Article no. 116437

Powering Business Worldwide

Delivery programme

Product range			Circuit-breaker
Protective function			System and cable protection
Standard/Approval			IEC
Installation type			Fixed
Release system			Thermomagnetic release
Construction size			LZM2
Description			Set value in neutral conductor is synchronous with set value Ir of main pole.
Number of poles			4 pole
Standard equipment			Screw connection
Switching capacity			
400/415 V 50/60 Hz	I_{cu}	kA	36
Rated current = rated uninterrupted current			
Rated current = rated uninterrupted current	$I_n = I_u$	A	250
Neutral conductor	% of phase conductor	CSA	100
Setting range			
Overload trip			
	I_r	A	200 - 250
Main pole 	I_r	A	200 - 250
Short-circuit releases 			
Non-delayed 	$I_i = I_n$ x …		6 - 10

Technical data

General

Standards			IEC/EN 60947, VDE 0660
Protection against direct contact			Finger and back-of-hand proof to VDE 0106 part 100
Climatic proofing			Damp heat, constant, to IEC 60068-2-78 Damp heat, cyclic, to IEC 60068-2-30
Mechanical shock resistance (10 ms half-sinusoidal shock) according to IEC 60068-2-27		g	20 (half-sinusoidal shock 20 ms)
Safe isolation to EN 61140			
Between auxiliary contacts and main contacts		V AC	500
between the auxiliary contacts		V AC	300
Mounting position			Vertical and 90° in all directions 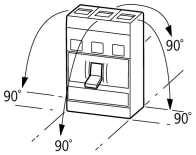 With XFI earth-fault release: - NZM1, N1, NZM2, N2: vertical and 90° in all directions with plug-in unit - NZM1, N1, NZM2, N2: vertical, 90° right/left with withdrawable unit: - NZM3, N3: vertical, 90° left - NZM4, N4: vertical with remote operator: - NZM2, N(S)2, NZM3, N(S)3, NZM4, N(S)4: vertical and 90° in all directions

Direction of incoming supply			as required
Degree of protection			
Device			In the area of the HMI devices: IP20 (basic protection type)
Enclosures			with insulating surround: IP40with door coupling rotary handle: IP66
Terminations			Tunnel terminal: IP10 Phase isolator and band terminal: IP00

Circuit-breakers

Rated current = rated uninterrupted current	$I_n = I_u$	A	250
Rated surge voltage invariability	U_{imp}		
Main contacts		V	8000
Auxiliary contacts		V	6000
Rated operational voltage	U_e	V AC	690
Overvoltage category/pollution degree			III/3
Rated insulation voltage	U_i	V	690
Use in unearthed supply systems		V	690

Switching capacity

Rated short-circuit making capacity	I_{cm}		
240 V 50/60 Hz	I_{cm}	kA	121
400/415 V 50/60 Hz	I_{cm}	kA	76
440 V 50/60 Hz	I_{cm}	kA	63
525 V 50/60 Hz	I_{cm}	kA	24
690 V 50/60 H	Ic	kA	14
Rated short-circuit breaking capacity I_{cn}	I_{cn}		
Icu to IEC/EN 60947 test cycle O-t-CO	Icu	kA	
240 V 50/60 Hz	I_{cu}	kA	55
400/415 V 50/60 Hz	I_{cu}	kA	36
440 V 50/60 Hz	I_{cu}	kA	30
525 V 50/60 Hz	I_{cu}	kA	12
690 V 50/60 Hz	I_{cu}	kA	8
Ics to IEC/EN 60947 test cycle O-t-CO-t-CO	Ics	kA	
230 V 50/60 Hz	I_{cs}	kA	55
400/415 V 50/60 Hz	I_{cs}	kA	36
440 V 50/60 Hz	I_{cs}	kA	22.5
525 V 50/60 Hz	I_{cs}	kA	6
690 V 50/60 Hz	Ics	kA	4
			Maximum back-up fuse, if the expected short-circuit currents at the installation location exceed the switching capacity of the circuit-breaker.
Utilization category to IEC/EN 60947-2			A
Rated making and breaking capacity			
Rated operational current	I_e	A	
AC-1			
380 V 400 V	I_e	A	300
415 V	I_e	A	300
690 V	I_e	A	250
AC--3			
380 V 400 V	I_e	A	250
415 V	I_e	A	250
660 V 690 V	I_e	A	250
Lifespan, mechanical	Operations		20000
Lifespan, electrical			
AC-1			
400 V 50/60 Hz	Operations		10000
415 V 50/60 Hz	Operations		10000
690 V 50/60 Hz	Operations		7500

AC-2, AC-3			
415 V 50/60 Hz	Operations		6500
690 V 50/60 Hz	Operations		5000
Max. operating frequency		Ops/h	120
Current heat losses per pole at I_u are based on the maximum rated operational current of the frame size.		W	19
			For current heat loss per pole the specification refers to the maximum rated operational current of the frame size.
Total downtime in a short-circuit		ms	< 10

Terminal capacity

Standard equipment			Screw connection
Overview			Basic equipment Box terminal ● - - - Screw connection - ● ● ● accessory consideration Box terminals - ● ● - Screw connection ● - - ● Tunnel terminal ● ● ● ● connection on rear ● ● ● ● Strip terminal - - - ●
Round copper conductor			
Box terminal			
Solid		mm^2	1 x (4 - 16) 2 x (4 - 16)
Stranded		mm^2	1 x (25 - 185) 2 x (25 - 70)
Tunnel terminal			
Solid		mm^2	1 x 16
Stranded		mm^2	
Stranded		mm^2	1 x (25 - 185)
Bolt terminal and rear-side connection			
Direct on the switch			
Solid		mm^2	1 x (4 - 16) 2 x (4 - 16)
Stranded		mm^2	1 x (25 - 185) 2 x (25 - 70)
Al conductors, Cu cable			
Solid		mm^2	1 x 16
Stranded		mm^2	
Stranded		mm^2	1 x (25 - 185)
Bolt terminal and rear-side connection			
Flat copper strip, with holes	min.	mm	2 x 16 x 0.8
Flat copper strip, with holes	max.	mm	10 x 16 x 0.8
Cu strip (number of segments x width x segment thickness)			
Box terminal			
	min.	mm^2	2 x 9 x 0.8
	max.	mm^2	10 x 16 x 0.8
Bolt terminal and rear-side connection			
Flat copper strip, with holes	min.	mm	2 x 16 x 0.8
Flat copper strip, with holes	max.	mm	10 x 16 x 0.8
Copper busbar (width x thickness)	mm		
Bolt terminal and rear-side connection			
Screw connection			M8

Direct on the switch			
	min.	mm^2	16 x 5
	max.	mm^2	20 x 5
Control cables			
		mm^2	1 x (0.75 - 2.5) 2 x (0.75 - 1.5)

Data for design verification according to IEC/EN 61439

Technical data for design verification			
Rated operational current for specified heat dissipation	I_n	A	250
Equipment heat dissipation, current-dependent	P_{vid}	W	58.125
IEC/EN 61439 design verification			
10.2 Strength of materials and parts			
10.2.2 Corrosion resistance			Meets the product standard's requirements.
10.2.3.1 Verification of thermal stability of enclosures			Meets the product standard's requirements.
10.2.3.2 Verification of resistance of insulating materials to normal heat			Meets the product standard's requirements.
10.2.3.3 Verification of resistance of insulating materials to abnormal heat and fire due to internal electric effects			Meets the product standard's requirements.
10.2.4 Resistance to ultra-violet (UV) radiation			Meets the product standard's requirements.
10.2.5 Lifting			Does not apply, since the entire switchgear needs to be evaluated.
10.2.6 Mechanical impact			Does not apply, since the entire switchgear needs to be evaluated.
10.2.7 Inscriptions			Meets the product standard's requirements.
10.3 Degree of protection of ASSEMBLIES			Does not apply, since the entire switchgear needs to be evaluated.
10.4 Clearances and creepage distances			Meets the product standard's requirements.
10.5 Protection against electric shock			Does not apply, since the entire switchgear needs to be evaluated.
10.6 Incorporation of switching devices and components			Does not apply, since the entire switchgear needs to be evaluated.
10.7 Internal electrical circuits and connections			Is the panel builder's responsibility.
10.8 Connections for external conductors			Is the panel builder's responsibility.
10.9 Insulation properties			
10.9.2 Power-frequency electric strength			Is the panel builder's responsibility.
10.9.3 Impulse withstand voltage			Is the panel builder's responsibility.
10.9.4 Testing of enclosures made of insulating material			Is the panel builder's responsibility.
10.10 Temperature rise			The panel builder is responsible for the temperature rise calculation. Eaton will provide heat dissipation data for the devices.
10.11 Short-circuit rating			Is the panel builder's responsibility. The specifications for the switchgear must be observed.
10.12 Electromagnetic compatibility			Is the panel builder's responsibility. The specifications for the switchgear must be observed.
10.13 Mechanical function			The device meets the requirements, provided the information in the instruction leaflet (IL) is observed.

Technical data ETIM 5.0

Low-voltage industrial components (EG000017) / Power circuit-breaker for trafo/generator/installation prot. (EC000228)			
Electric engineering, automation, process control engineering / Low-voltage switch technology / Circuit breaker (LV < 1 kV) / Circuit breaker for power transformer, generator and system protection (ecl@ss8-27-37-04-09 [AJZ716009])			
Rated permanent current Iu		A	250
Rated short-circuit breaking capacity Icu at 400 V, 50 Hz		kA	36
Setting range overload protector		A	200 - 250
Adjustment range short-term delayed short-circuit release		A	0 - 0
Adjustment range undelayed short-circuit release		A	1500 - 2500
Integrated earth fault protection			No
Connection type main current circuit			Screw connection
Device construction			Built-in device fixed built-in technique
Suitable for DIN rail (top hat rail) mounting			No
Number of auxiliary contacts as normally closed contact			0
Number of auxiliary contacts as normally open contact			0
Number of auxiliary contacts as change-over contact			0

Switched-off indicator available	No
With under voltage release	No
Number of poles	4
Position of connection for main current circuit	Front connection
Type of control element	Rocker lever
Motor drive optional	Yes
Motor drive integrated	No
Degree of protection (IP)	IP20

Characteristics

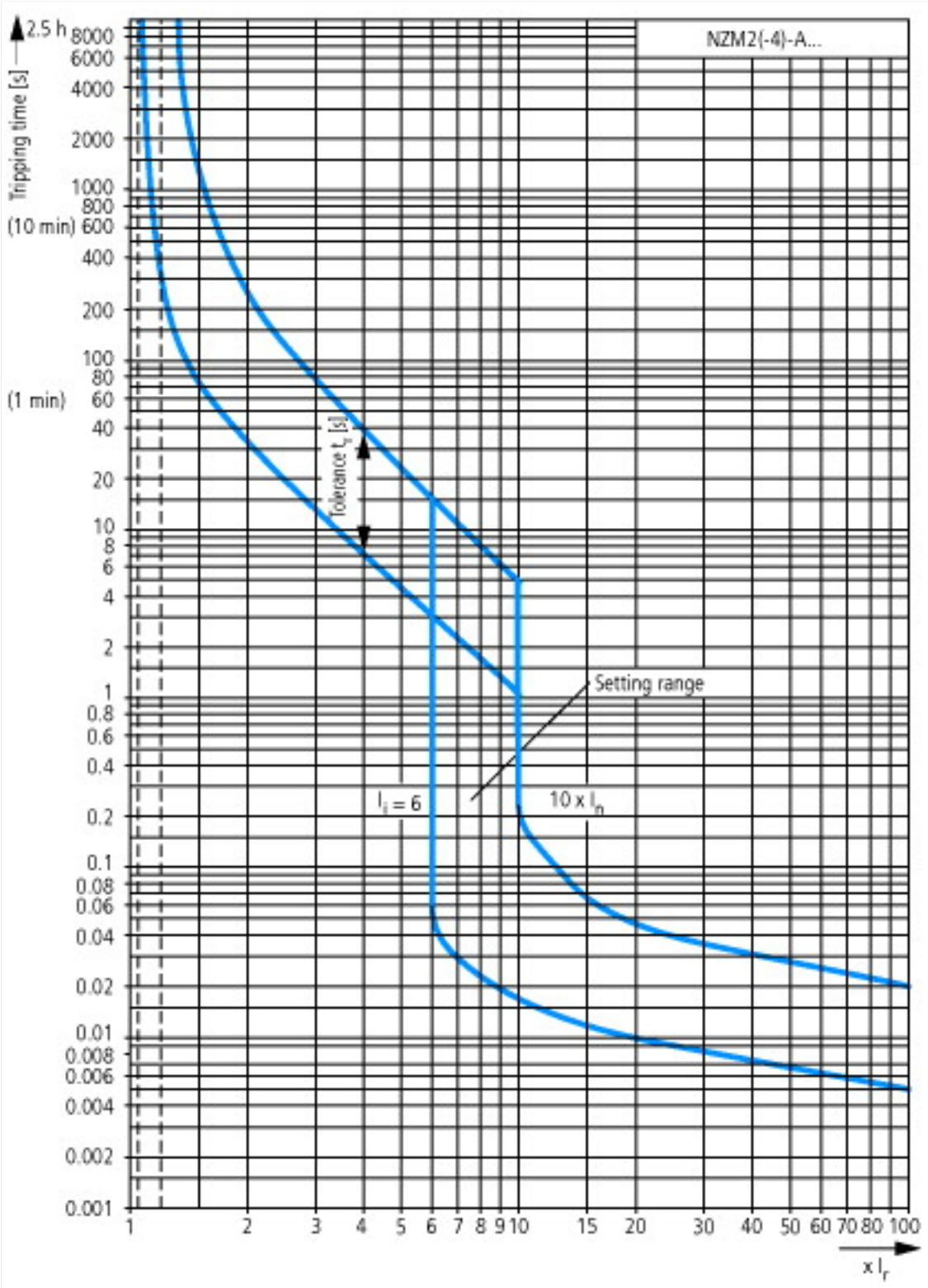

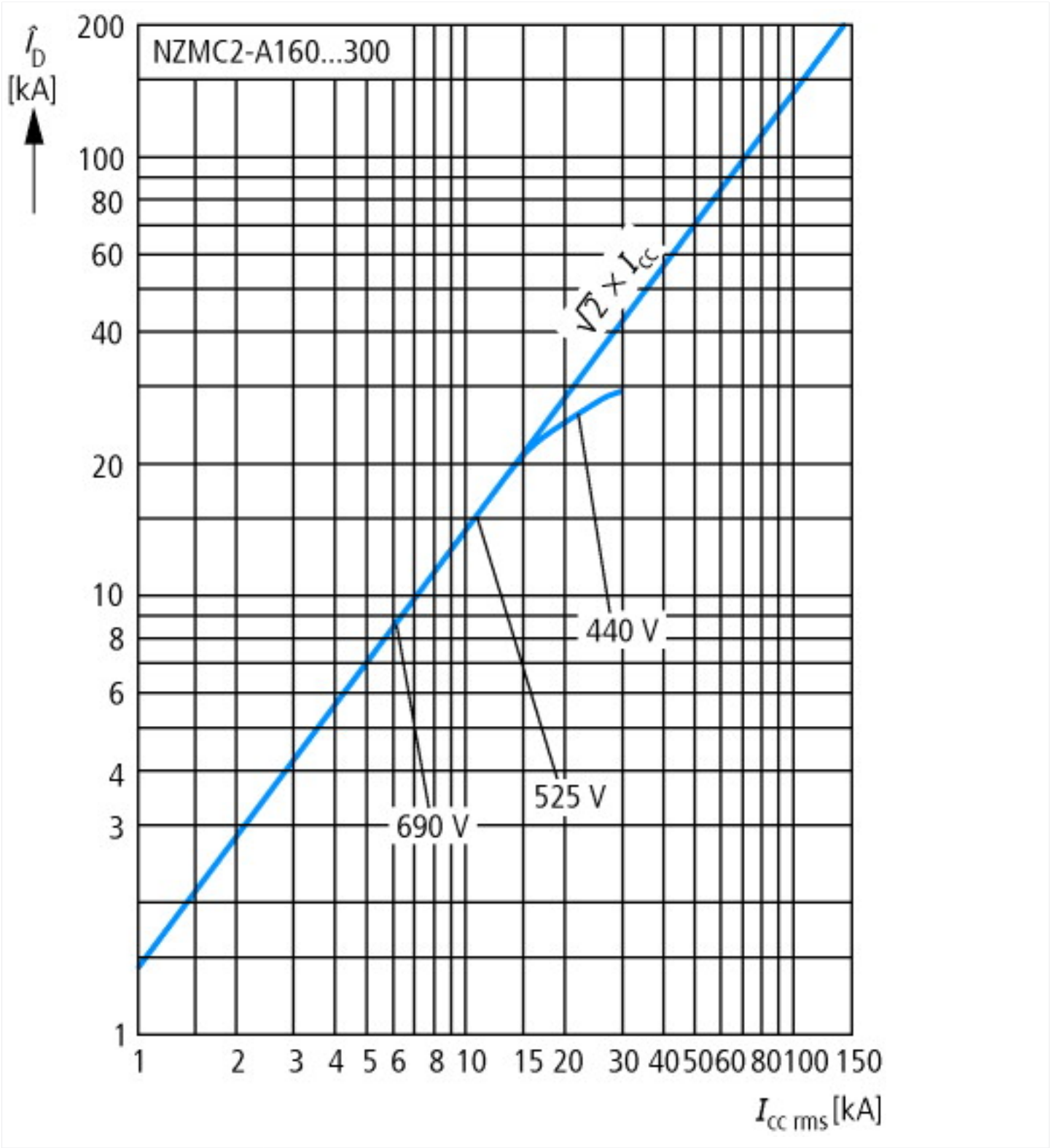
NZMC2-A160...300
$\hat{I}_D$ [kA]
200
100
80
60
40
20
10
8
6
4
3
1
$\sqrt{2} \times I_{cc}$
440 V
525 V
690 V
1
2
3
4
5
6
8
10
15
20
30
40
50
60
80
100
150
$I_{cc\ rms}$ [kA]

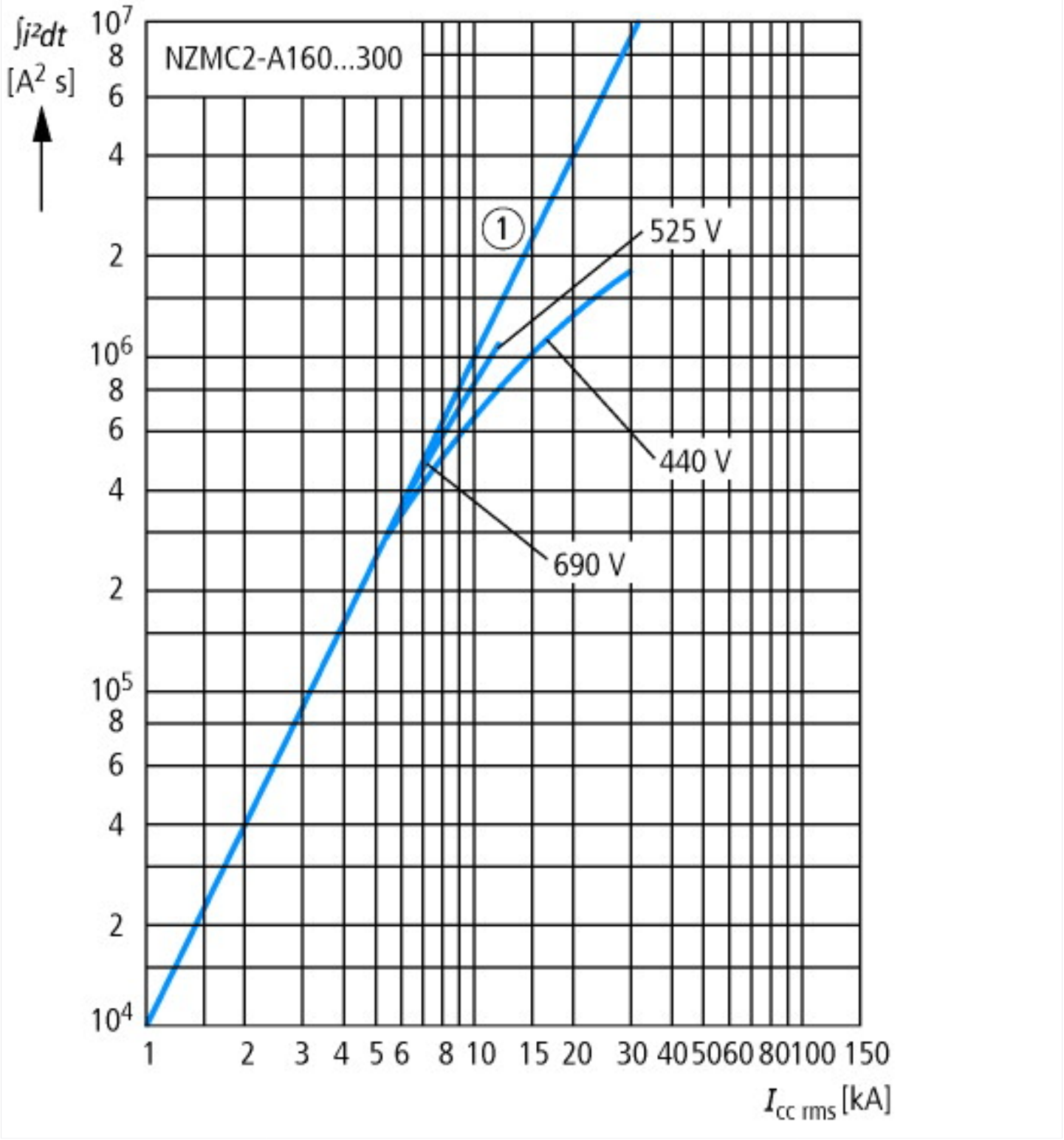
∫i²dt
[A² s]
NZMC2-A160...300
1
525 V
440 V
690 V
10⁷
8
6
4
2
10⁶
8
6
4
2
10⁵
8
6
4
2
10⁴
1
2
3
4
5
6
8
10
15
20
30
40
50
60
80
100
150
I cc rms [kA]

Dimensions

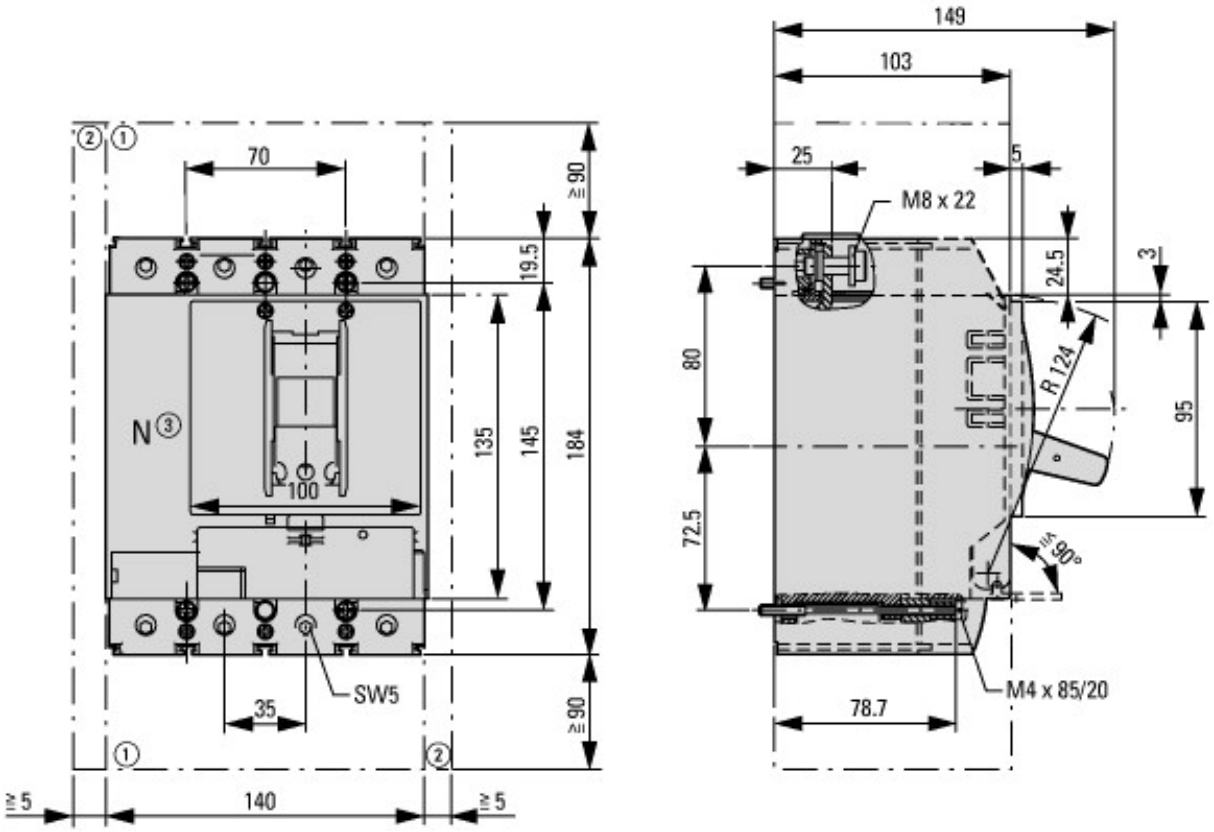

① Blow out area, minimum clearance to other parts

② Minimum clearance to adjacent parts

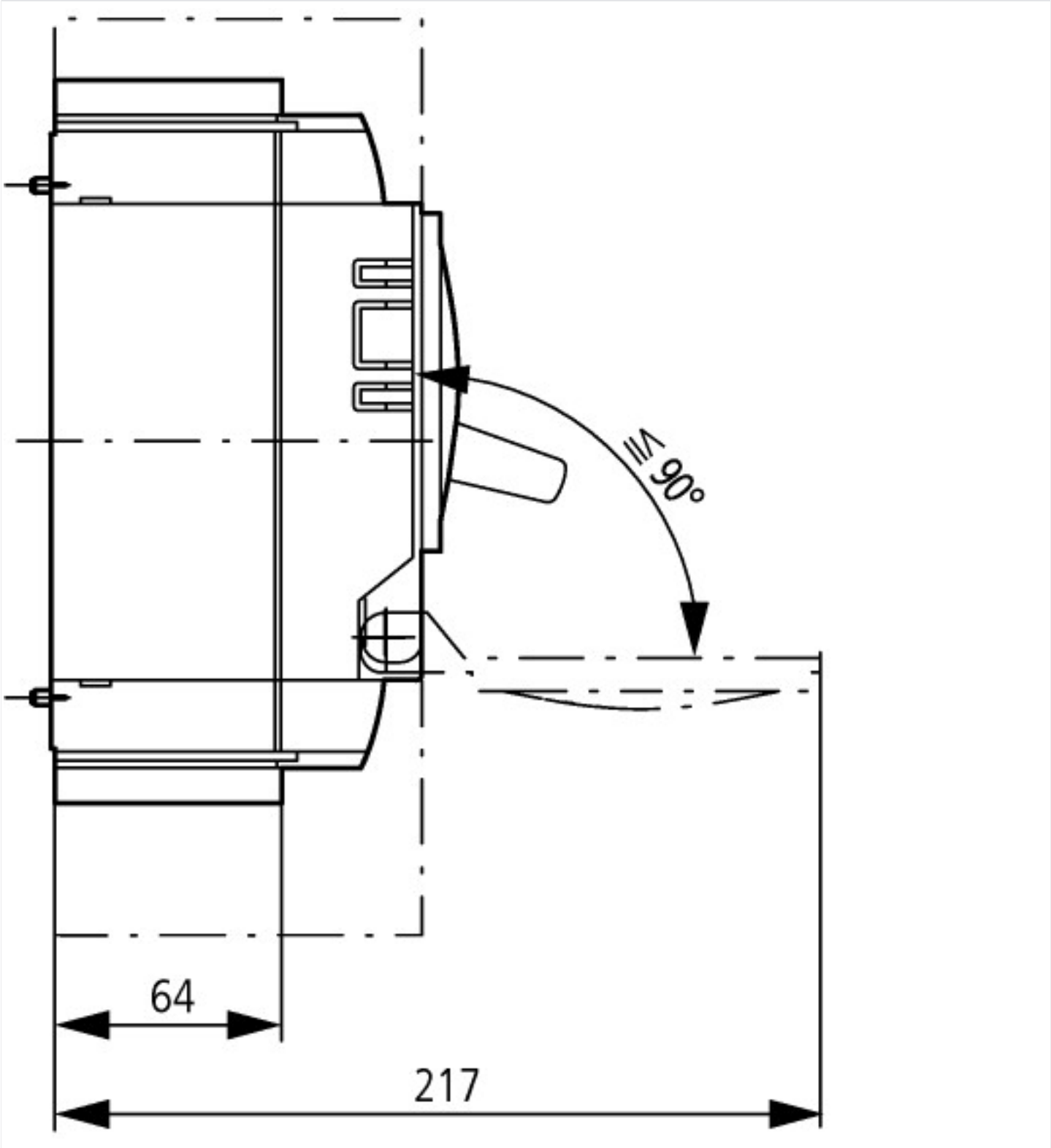

Additional product information (links)

IL01206012Z circuit-breaker LZMB2, switch-disconnector LN2	
IL01206012Z circuit-breaker LZMB2, switch-disconnector LN2	ftp://ftp.moeller.net/DOCUMENTATION/AWA_INSTRUCTIONS/IL01206012Z2013_08.pdf

© 12/2014 by Eaton Industries GmbH