

Shroud, for flush mounting plate, 4 mounting locations

Part no. M22-H4
Article no. 216551
Catalog No. M22-H4Q

Powering Business Worldwide

Delivery programme

Product range		RMQ-Titan (drilling dimensions 22.5 mm)
Basic function		Accessories
Accessories		Surface mounting enclosure
Basic function accessories		Shrouds
Single unit/Complete unit		Single unit
Material		Insulated material light
		Protection type only in combination with flush mounting plates M22-E…
Degree of Protection		IP40
Number of locations	Qty.	4
Colour		
RAL Value		RAL 7035
Cable entry knockouts	Quantity x M20	4
Connection to SmartWire-DT		no

Approvals

Product Standards	IEC/EN 60947-5; UL 508; CSA-C22.2 No. 14-05; CSA-C22.2 No. 94-91; CE marking
UL File No.	E29184
UL Category Control No.	NKCR
CSA File No.	012528
CSA Class No.	3211-03
North America Certification	UL listed, CSA certified
Degree of Protection	UL/CSA Type 3R, 4X, 12, 13

Data for design verification according to IEC/EN 61439

IEC/EN 61439 design verification	
10.2 Strength of materials and parts	
10.2.2 Corrosion resistance	Meets the product standard's requirements.
10.2.3.1 Verification of thermal stability of enclosures	Meets the product standard's requirements.
10.2.3.2 Verification of resistance of insulating materials to normal heat	Meets the product standard's requirements.
10.2.3.3 Verification of resistance of insulating materials to abnormal heat and fire due to internal electric effects	Meets the product standard's requirements.
10.2.4 Resistance to ultra-violet (UV) radiation	Please enquire
10.2.5 Lifting	Does not apply, since the entire switchgear needs to be evaluated.
10.2.6 Mechanical impact	Does not apply, since the entire switchgear needs to be evaluated.
10.2.7 Inscriptions	Meets the product standard's requirements.
10.3 Degree of protection of ASSEMBLIES	Does not apply, since the entire switchgear needs to be evaluated.
10.4 Clearances and creepage distances	Meets the product standard's requirements.
10.5 Protection against electric shock	Does not apply, since the entire switchgear needs to be evaluated.
10.6 Incorporation of switching devices and components	Does not apply, since the entire switchgear needs to be evaluated.
10.7 Internal electrical circuits and connections	Is the panel builder's responsibility.
10.8 Connections for external conductors	Is the panel builder's responsibility.
10.9 Insulation properties	
10.9.2 Power-frequency electric strength	Is the panel builder's responsibility.
10.9.3 Impulse withstand voltage	Is the panel builder's responsibility.

10.9.4 Testing of enclosures made of insulating material			Is the panel builder's responsibility.
10.10 Temperature rise			The panel builder is responsible for the temperature rise calculation. Eaton will provide heat dissipation data for the devices.
10.11 Short-circuit rating			Is the panel builder's responsibility. The specifications for the switchgear must be observed.
10.12 Electromagnetic compatibility			Is the panel builder's responsibility. The specifications for the switchgear must be observed.
10.13 Mechanical function			The device meets the requirements, provided the information in the instruction leaflet (IL) is observed.

Technical data ETIM 5.0

Low-voltage industrial components (EG000017) / Protective cover for contact element pushbutton (EC000202)			
Electric engineering, automation, process control engineering / Low-voltage switch technology / Command and alarm device / Protective hood for command devices (ecl@ss8-27-37-12-06 [AKF024010])			
Number of appliances to build in			4
Degree of protection (IP)			IP40

Dimensions

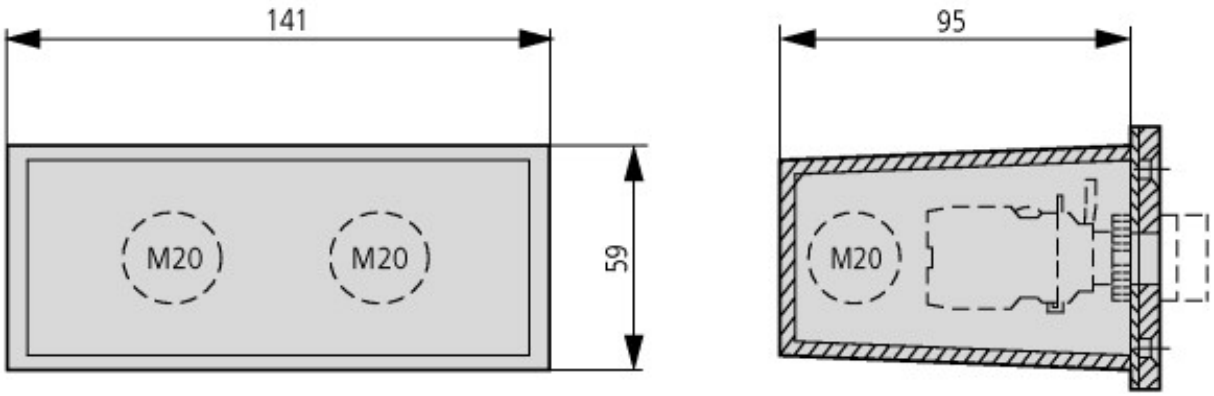

Cable gland: 4 x M20
Construction type: split

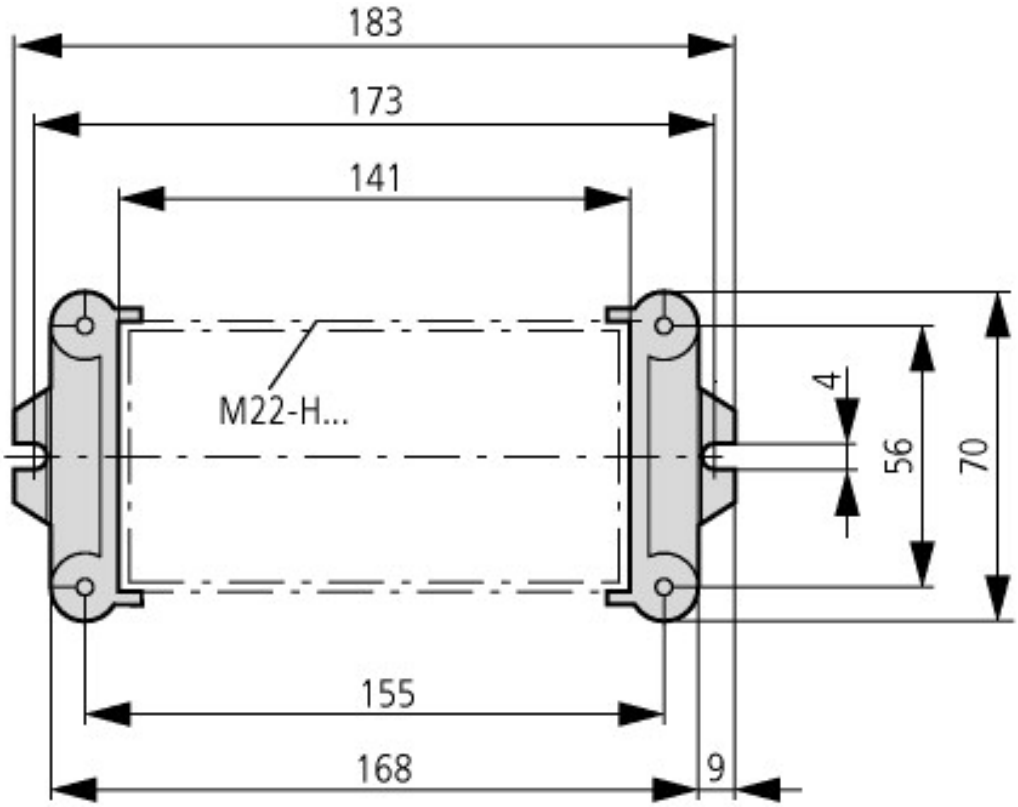

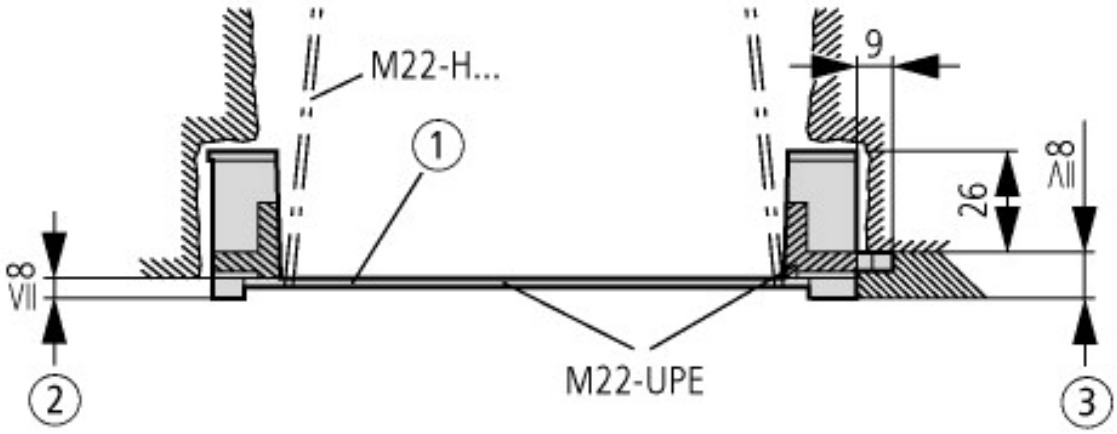

Shroud with M22-UPE set of plaster keys

① Blanking card for chasing in wall

② Plaster thickness less than 8 mm

③ Plaster thickness more than 8 mm

Additional product information (links)

IL04716003Z (AWA1160-1746) RMQ-Titan System	
IL04716003Z (AWA1160-1746) RMQ-Titan System	ftp://ftp.moeller.net/DOCUMENTATION/AWA_INSTRUCTIONS/IL04716003Z2011_02.pdf

© 10/2014 by Eaton Industries GmbH