

# Shroud, for flush mounting plate, 5 mounting locations

**Part no.** M22-H5
**Article no.** 216552
**Catalog No.** M22-H5Q

Powering Business Worldwide

## Delivery programme

| | | |
|---|---|---|
| Product range | | RMQ-Titan (drilling dimensions 22.5 mm) |
| Basic function | | Accessories |
| Accessories | | Surface mounting enclosure |
| Basic function accessories | | Shrouds |
| Single unit/Complete unit | | Single unit |
| Material | | Insulated material light |
| | | Protection type only in combination with flush mounting plates M22-E… |
| Degree of Protection | | IP40 |
| Number of locations | Qty. | 5 |
| Colour | | |
| | |  |
| RAL Value | | RAL 7035 |
| Cable entry knockouts | Quantity x M20 | 5 |
| Connection to SmartWire-DT | | no |

## Approvals

| | |
|---|---|
| Product Standards | IEC/EN 60947-5; UL 508; CSA-C22.2 No. 14-05; CSA-C22.2 No. 94-91; CE marking |
| UL File No. | E29184 |
| UL Category Control No. | NKCR |
| CSA File No. | 012528 |
| CSA Class No. | 3211-03 |
| North America Certification | UL listed, CSA certified |
| Degree of Protection | UL/CSA Type 3R, 4X, 12, 13 |

## Data for design verification according to IEC/EN 61439

| | |
|---|---|
| IEC/EN 61439 design verification | |
| 10.2 Strength of materials and parts | |
| 10.2.2 Corrosion resistance | Meets the product standard's requirements. |
| 10.2.3.1 Verification of thermal stability of enclosures | Meets the product standard's requirements. |
| 10.2.3.2 Verification of resistance of insulating materials to normal heat | Meets the product standard's requirements. |
| 10.2.3.3 Verification of resistance of insulating materials to abnormal heat and fire due to internal electric effects | Meets the product standard's requirements. |
| 10.2.4 Resistance to ultra-violet (UV) radiation | Please enquire |
| 10.2.5 Lifting | Does not apply, since the entire switchgear needs to be evaluated. |
| 10.2.6 Mechanical impact | Does not apply, since the entire switchgear needs to be evaluated. |
| 10.2.7 Inscriptions | Meets the product standard's requirements. |
| 10.3 Degree of protection of ASSEMBLIES | Does not apply, since the entire switchgear needs to be evaluated. |
| 10.4 Clearances and creepage distances | Meets the product standard's requirements. |
| 10.5 Protection against electric shock | Does not apply, since the entire switchgear needs to be evaluated. |
| 10.6 Incorporation of switching devices and components | Does not apply, since the entire switchgear needs to be evaluated. |
| 10.7 Internal electrical circuits and connections | Is the panel builder's responsibility. |
| 10.8 Connections for external conductors | Is the panel builder's responsibility. |
| 10.9 Insulation properties | |
| 10.9.2 Power-frequency electric strength | Is the panel builder's responsibility. |
| 10.9.3 Impulse withstand voltage | Is the panel builder's responsibility. |

| | | |
|---|---|---|
| 10.9.4 Testing of enclosures made of insulating material | | Is the panel builder's responsibility. |
| 10.10 Temperature rise | | The panel builder is responsible for the temperature rise calculation. Eaton will provide heat dissipation data for the devices. |
| 10.11 Short-circuit rating | | Is the panel builder's responsibility. The specifications for the switchgear must be observed. |
| 10.12 Electromagnetic compatibility | | Is the panel builder's responsibility. The specifications for the switchgear must be observed. |
| 10.13 Mechanical function | | The device meets the requirements, provided the information in the instruction leaflet (IL) is observed. |

## Technical data ETIM 5.0

| | | |
|---|---|---|
| Low-voltage industrial components (EG000017) / Protective cover for contact element pushbutton (EC000202) | | |
| Electric engineering, automation, process control engineering / Low-voltage switch technology / Command and alarm device / Protective hood for command devices (ecl@ss8-27-37-12-06 [AKF024010]) | | |
| Number of appliances to build in | | 5 |
| Degree of protection (IP) | | IP40 |

## Dimensions

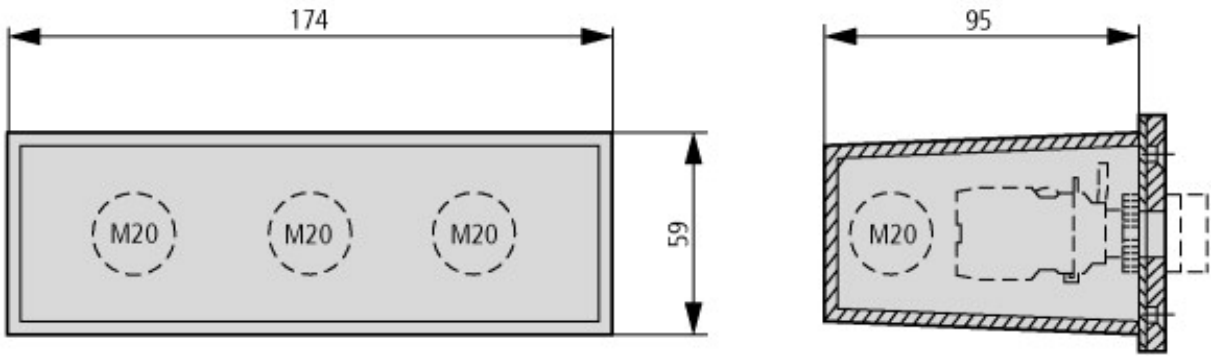


Cable gland: 5 x M20
Construction type: split

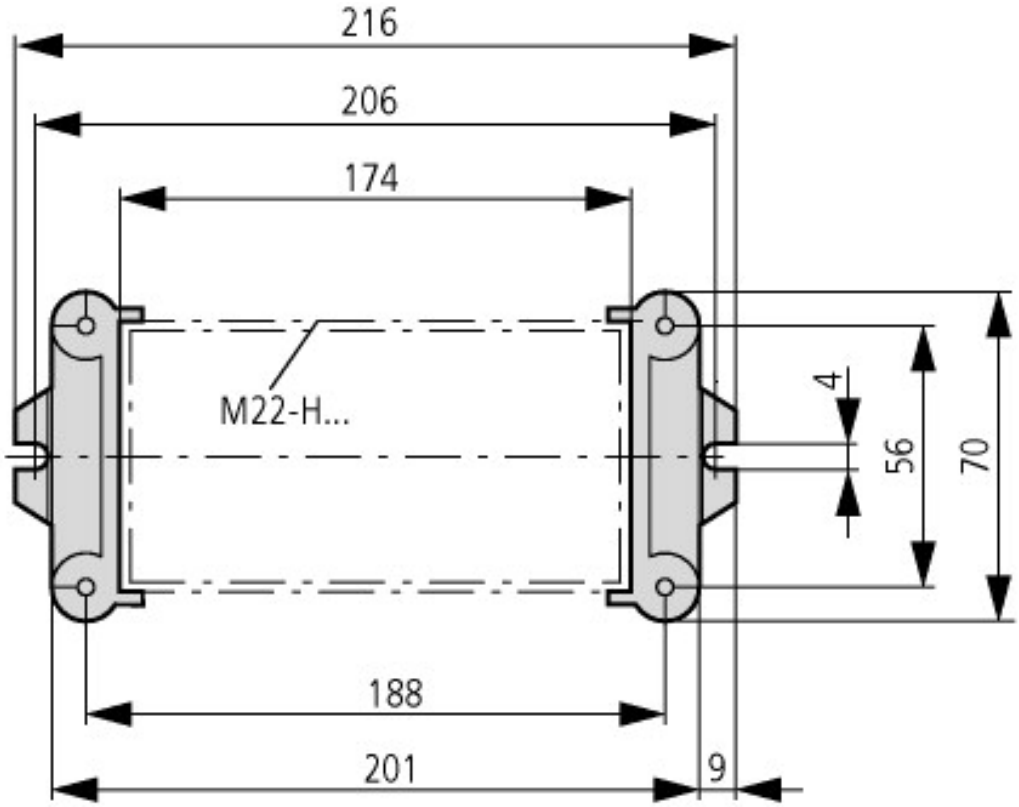


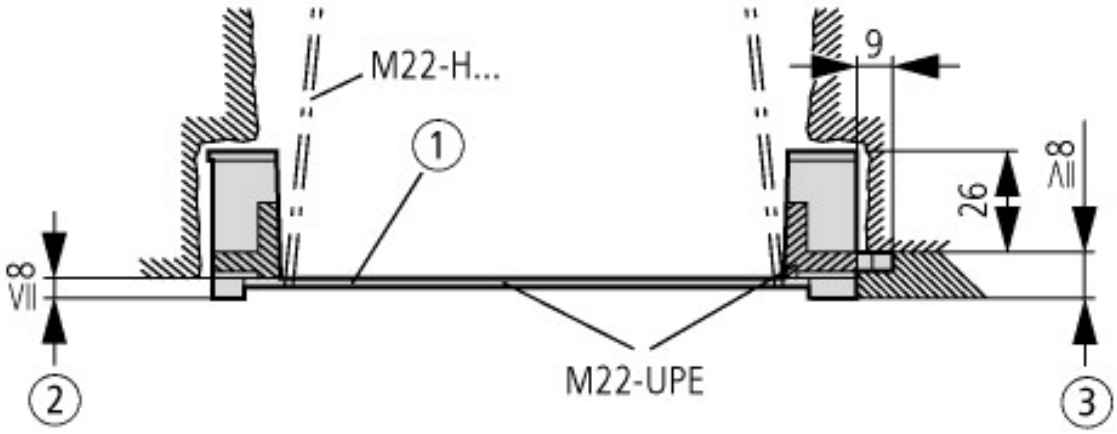


Shroud with M22-UPE set of plaster keys

① Blanking card for chasing in wall

② Plaster thickness less than 8 mm

③ Plaster thickness more than 8 mm

## Additional product information (links)

| **IL04716003Z (AWA1160-1746) RMQ-Titan System** | |
|---|---|
| IL04716003Z (AWA1160-1746) RMQ-Titan System | ftp://ftp.moeller.net/DOCUMENTATION/AWA_INSTRUCTIONS/IL04716003Z2011_02.pdf |


© 10/2014 by Eaton Industries GmbH