SIEMENS

Data sheet 3SU1400-1AA10-1BA0

CONTACT MODULE WITH 1 CONTACT ELEMENT, 1NO, SCREW TERMINAL, FOR FRONT PLATE MOUNTING



Figure similar

product brand name	SIRIUS ACT
Product designation	Commanding and signaling devices
Design of the product	Contact module

Contact block/ lampholder:

Suitability for integration	
• pressure selection button	Yes
• front element	Yes
• Pendant pushbutton	Yes
• Pendant switch	Yes

General technical data:

Product function	
• positive opening	No
Insulation voltage	
• Rated value	500 V
Surge voltage resistance Rated value	6 kV
Protection class IP	
• of the enclosure	IP40
• of the terminal	IP20

Changes preserved
© Copyright Siemens AG

Degree of pollution	3
Shock resistance	
• acc. to IEC 60068-2-27	Sinusoidal half-wave 50 g / 11 ms
• for railway applications acc. to DIN EN 61373	Category 1, Class B
Vibration resistance	
• acc. to IEC 60068-2-6	10 ... 500 Hz: 5g
• for railway applications acc. to DIN EN 61373	Category 1, Class B
Operating frequency maximum	3 600 1/h
Mechanical service life (switching cycles)	
• typical	10 000 000
Electrical endurance (switching cycles)	
• typical	10 000 000
Thermal current	10 A
Equipment marking	
• acc. to DIN EN 61346-2	S
• acc. to DIN EN 81346-2	S
Design of the fuse link for short-circuit protection of the auxiliary switch with type of assignment 1 required	gG / Dz 10 A, quick-acting / Dz 10 A
Continuous current of the C characteristic MCB	10 A

Power Electronics:	
Contact reliability	One maloperation per 100 million (17 V, 5 mA), one maloperation per 10 million (5 V, 1 mA)

Auxiliary circuit:	
Design of the contact of the auxiliary contacts	Silver alloy
Number of NC contacts	
• for auxiliary contacts	0
Number of NO contacts	
• for auxiliary contacts	1
— leading contact	0
Number of CO contacts	
• for auxiliary contacts	0
Operating current at AC-12	
• at 24 V Rated value	10 A
• at 48 V Rated value	10 A
• at 110 V Rated value	10 A
• at 230 V Rated value	8 A
• at 400 V Rated value	8 A
Operating current at AC-15	
• at 24 V Rated value	6 A
• at 48 V Rated value	6 A
• at 110 V Rated value	6 A

Changes preserved
© Copyright Siemens AG

• at 230 V Rated value	6 A
• at 400 V Rated value	3 A
• at 500 V Rated value	1.4 A
Operating current at DC-12	
• at 24 V Rated value	10 A
• at 48 V Rated value	5 A
• at 110 V Rated value	2.5 A
• at 230 V Rated value	1 A
• at 400 V Rated value	0.3 A
• at 500 V Rated value	0.3 A
Operating current at DC-13	
• at 24 V Rated value	3 A
• at 48 V Rated value	1.5 A
• at 110 V Rated value	0.7 A
• at 230 V Rated value	0.3 A
• at 400 V Rated value	0.1 A
• at 500 V Rated value	0.1 A

Connections/ Terminals:

Type of electrical connection	screw-type terminals
Tightening torque	
• with screw-type terminals	0.8 ... 0.9 N·m

Ambient conditions:

Ambient temperature	
• during operation	-25 ... +70 °C
• during storage	-40 ... +80 °C
Environmental category during operation acc. to IEC 60721	3K6, 3C3, 3S2, 3M6

Installation/ mounting/ dimensions:

Mounting type	
• of modules and accessories	Front plate mounting
Height	33.2 mm
Width	9.8 mm
Depth	27.7 mm

Certificates/ approvals:

Changes preserved
© Copyright Siemens AG

General Product Approval				For use in hazardous locations	Declaration of Conformity
CCC	CSA	UL	VDE	Herstellererklärung	EG-Konf.

other
Bestätigungen

Further information

Information- and Downloadcenter (Catalogs, Brochures,…)
http://www.siemens.com/industrial-controls/catalogs

Industry Mall (Online ordering system)
https://mall.industry.siemens.com/mall/en/en/Catalog/product?mlfb=3SU14001AA101BA0

Cax online generator
http://support.automation.siemens.com/WW/CAXorder/default.aspx?lang=en&mlfb=3SU14001AA101BA0

Service&Support (Manuals, Certificates, Characteristics, FAQs,...)
https://support.industry.siemens.com/cs/ww/en/ps/3SU14001AA101BA0

Image database (product images, 2D dimension drawings, 3D models, device circuit diagrams, EPLAN macros, ...)
http://www.automation.siemens.com/bilddb/cax_de.aspx?mlfb=3SU14001AA101BA0&lang=en

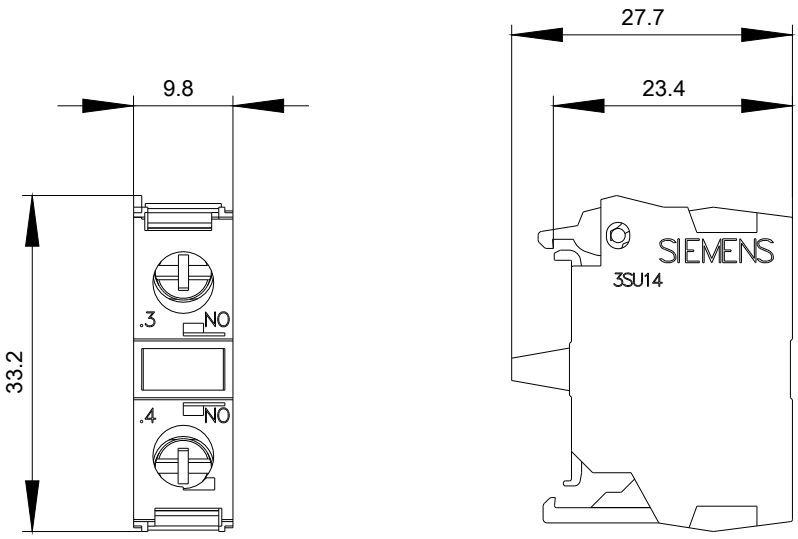

Changes preserved
© Copyright Siemens AG

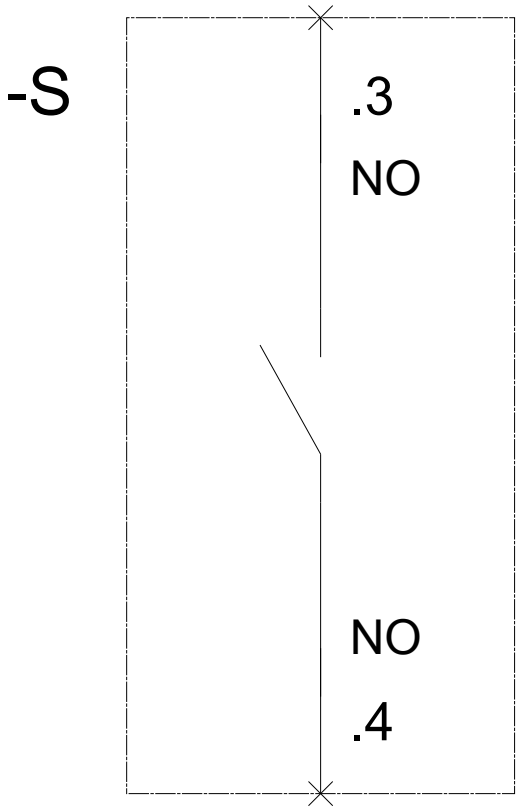

last modified: 12.10.2015

Changes preserved
© Copyright Siemens AG