SIEMENS

## Product data sheet 5ST3731

PIN BUSBAR SHOCKPROOF, 10 SQMM 1-PHASE,
1016 MM LONG CAN BE CUT,
WITHOUT END CAPS



Similar to image

### Technical data:

| | | |
|---|---|---|
| **Busbar design** | | laminated |
| **Length** | mm | 1,016 |
| **Width** | mm | 13 |
| **Operating current / rated value** | A | 63 |
| **Thickness / of busbar** | mm | 3.5 |
| **Material / of the busbar** | | SF-Cu F 24 |
| **Product property / flexible** | | Yes |
| **Traitement de surface / étamé** | | No |

### Certificates/approvals:

| General Product Approval | Declaration of Conformity | other |
|---|---|---|
| GOST | EG-Konf. | other |

### Further information:

**Information- and Downloadcenter (Catalogs, Brochures,…)**
http://www.siemens.com/lowvoltage/catalogs


subject to modifications
© Copyright Siemens AG 2013

**Industry Mall (Online ordering system)**
http://www.siemens.com/lowvoltage/mall

**Service&Support (Manuals, Certificates, Characteristics, FAQs,...)**
http://support.automation.siemens.com/WW/view/en/5ST3731/all

**Image database (product images, 2D dimension drawings, 3D models, device circuit diagrams, ...)**
http://www.automation.siemens.com/bilddb/cax_en.aspx?mlfb=5ST3731

**CAx-Online-Generator**
http://www.siemens.com/cax

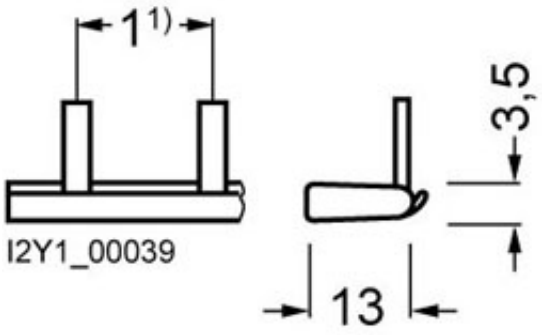


1) Pin spacings in MW (Modular widths, 1 MW = 18 mm).

**last change:** Nov 29, 2012


© Copyright Siemens AG 2013