SIEMENS

Data sheet 3SU1900-0FA10-0AA0

SEALING PLUG FOR SPARE ROUND COMMAND POINTS, PLASTIC, BLACK



Figure similar

product brand name	SIRIUS ACT
Product designation	Commanding and signaling devices
Design of the product	Sealing plug

Actuator:	
Shape of the actuating element	round
Outer diameter of the actuating element	29.5 mm

General technical data:	
Protection class IP	IP66, IP67, IP69(IP69K)
Equipment marking	
• acc. to DIN EN 61346-2	S
• acc. to DIN EN 81346-2	S

Ambient conditions:	
Ambient temperature	
• during operation	-25 ... +70 °C
• during storage	-40 ... +80 °C
Environmental category during operation acc. to IEC 60721	3K6, 3C3, 3S2, 3M6

Installation/ mounting/ dimensions:

Changes preserved
© Copyright Siemens AG

Shape of the installation opening	round
Mounting diameter	22 mm
Mounting height	6.5 mm
Installation width	29.5 mm
Installation depth	24.2 mm

Accessories:

Material of accessory	Plastic
Color of accessory	black

Certificates/ approvals:

General Product Approval		EMC	Declaration of Conformity	other
CSA	UL	EG-Konformitätserklärung EMV	EG-Konf.	Bestätigungen

Further information

Information- and Downloadcenter (Catalogs, Brochures,…)
http://www.siemens.com/industrial-controls/catalogs

Industry Mall (Online ordering system)
https://mall.industry.siemens.com/mall/en/en/Catalog/product?mlfb=3SU19000FA100AA0

Cax online generator
http://support.automation.siemens.com/WW/CAXorder/default.aspx?lang=en&mlfb=3SU19000FA100AA0

Service&Support (Manuals, Certificates, Characteristics, FAQs,...)
https://support.industry.siemens.com/cs/ww/en/ps/3SU19000FA100AA0

Image database (product images, 2D dimension drawings, 3D models, device circuit diagrams, EPLAN macros, ...)
http://www.automation.siemens.com/bilddb/cax_de.aspx?mlfb=3SU19000FA100AA0&lang=en

Changes preserved
© Copyright Siemens AG

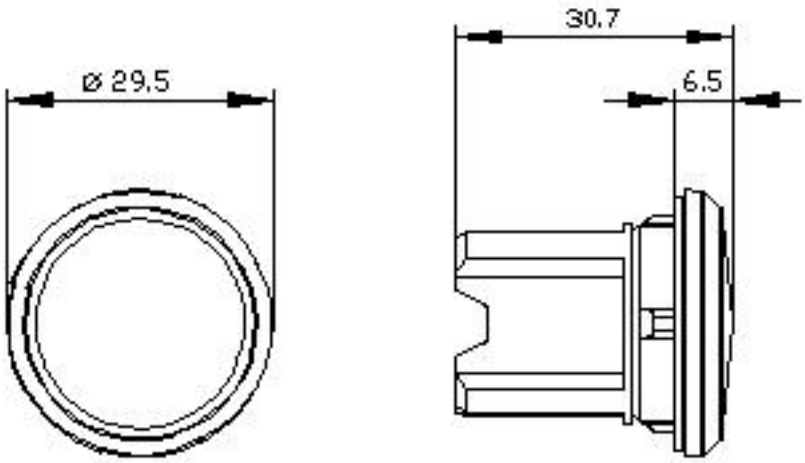

last modified: 09.10.2015

Changes preserved
© Copyright Siemens AG