

Phase isolator, 3p, size 2

Part no. **NZM2-XKP**
Article no. **119864**

Catalog No.

Powering Business Worldwide™

Delivery programme

Number of conductors	3 pole
Accessories	Phase isolators
For use with	NZM2, PN2, N(S)2

Notes

Model contains parts for one switch side including insulating plate for mounting plate at top or bottom for 3- or 4-pole switch.

Can not be combined with connection on rear NZM1/2(-4)-XKR.

Insulation protection up to rated operational voltage U_e of 415 V AC if minimum clearances are not maintained.

Approvals

North America Certification	UL/CSA certification not required

Technical data ETIM 5.0

Low-voltage industrial components (EG000017) / Phase separation plate for power circuit breaker (EC002035)
Electric engineering, automation, process control engineering / Low-voltage switch technology / Circuit breaker (LV < 1 kV) / Phase separation plate for circuit breaker (ecl@ss8-27-37-04-25 [ACN959007])

Model	-

Dimensions

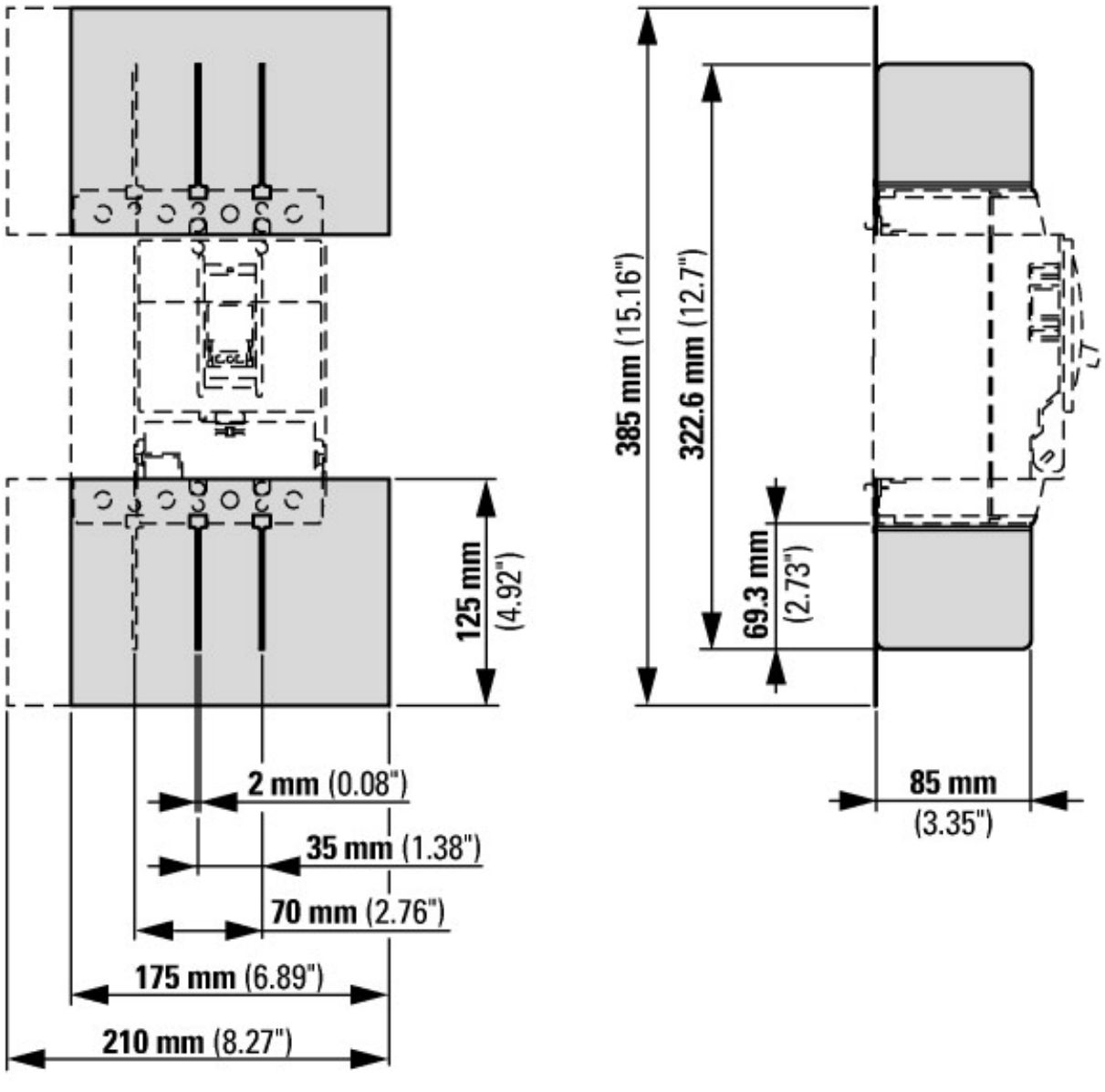

Additional product information (links)

IL01219043Z (AWA1230-2509) NZM1, NZM2 Phase disconnector	
IL01219043Z (AWA1230-2509) NZM1, NZM2 Phase disconnector	ftp://ftp.moeller.net/DOCUMENTATION/AWA_INSTRUCTIONS/IL01219043Z2011_02.pdf

© 02/2014 by Eaton Industries GmbH