MOELLER

Type: **NZM1–XKA**
Article No.: **266730**
Sales text **Tunnel terminal 3pole**

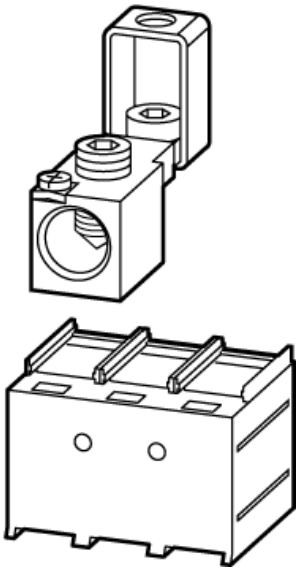

Ordering information			
For use with			
For use with			NZM1(–4), PN1(–4), N(S)1(–4)
For use with			Three– and four–pole
Terminal capacities			
Type of conductor			Copper cable Al cable
Terminal capacities		mm^2	1 × 16 – 95
AWG/kcmil		mm^2	1 × 6 – 3/0 –

Space requirement

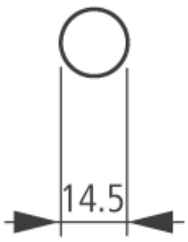

Notes concerning the product group

Type contains parts for a terminal located at top or bottom for 3 or 4–pole circuit–breakers.

A standard with control circuit terminal for 1 × 0.75 – 2.5 mm^2 (18 – 14 AWG) or 2 × 0.75 – 1.5 mm^2 (18 – 14 AWG) copper conductors.

Fitted outside the switch housing

Use with flexible and highly flexible conductors ferrules. Maximum specified cross−section can only be connected when stranded and without ferrules.

Mounting of the cover NZM1(−4)−XKSA obligatory (supplied).

Dimensions

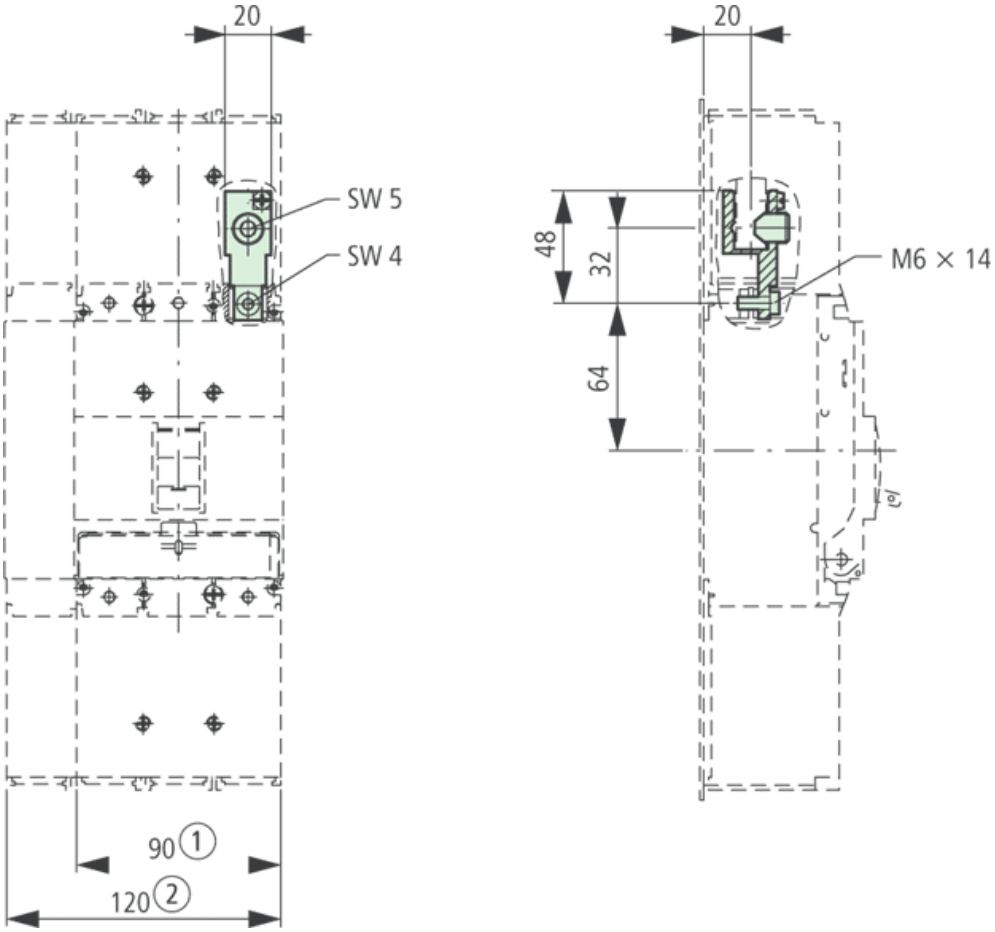

3 pole
4 pole

Moeller GmbH, Hein−Moeller−Str. 7−11, D−53115 Bonn
E−Mail: catalog@moeller.net, Internet: www.moeller.net, http://catalog.moeller.net
HPL−C2007G V2.1 © 2007 by Moeller GmbH