SIEMENS

Data sheet 3SU1401-1BF60-1AA0

LED MODULE WITH INTEGRATED LED 230V AC, WHITE, SCREW TERMINAL, FOR FRONT PLATE MOUNTING



Figure similar

product brand name	SIRIUS ACT
Product designation	Commanding and signaling devices
Design of the product	LED module

General technical data:	
Product component	
• diode	Yes
• lamp transformer	No
• Light source	Yes
• series resistor	No
Insulation voltage	
• Rated value	320 V
Surge voltage resistance Rated value	4 kV
Consumed current	
• maximum	20 mA
Protection class IP	
• of the enclosure	IP40
• of the terminal	IP20
Degree of pollution	3
Shock resistance	

Changes preserved
© Copyright Siemens AG

• acc. to IEC 60068-2-27	Sinusoidal half-wave 50 g / 11 ms
• for railway applications acc. to DIN EN 61373	Category 1, Class B
Vibration resistance	
• acc. to IEC 60068-2-6	10 ... 500 Hz: 5g
• for railway applications acc. to DIN EN 61373	Category 1, Class B
Operating period typical	100 000 h
Equipment marking	
• acc. to DIN EN 61346-2	P
• acc. to DIN EN 81346-2	P
Operating voltage 1	
• at AC	
— at 50 Hz Rated value	230 V
— at 60 Hz Rated value	230 V
Relative positive tolerance of the operating voltage	20 %
Relative negative tolerance of the operating voltage	20 %

Connections/ Terminals:	
Type of electrical connection	screw-type terminals
Tightening torque	
• with screw-type terminals	0.8 ... 0.9 N·m

Lamp:	
Type of light source	LED
Color of the light source	white

Ambient conditions:	
Ambient temperature	
• during operation	-25 ... +70 °C
• during storage	-40 ... +80 °C
Environmental category during operation acc. to IEC 60721	3K6, 3S2, 3M6

Installation/ mounting/ dimensions:	
Mounting type	
• of modules and accessories	Front plate mounting
Height	33.2 mm
Width	9.8 mm
Depth	29.4 mm

Certificates/ approvals:

Changes preserved
© Copyright Siemens AG

General Product Approval			Declaration of Conformity	other
CCC	CSA	UL	EG-Konf.	Bestätigungen

Further information

Information- and Downloadcenter (Catalogs, Brochures,…)
http://www.siemens.com/industrial-controls/catalogs

Industry Mall (Online ordering system)
https://mall.industry.siemens.com/mall/en/en/Catalog/product?mlfb=3SU14011BF601AA0

Cax online generator
http://support.automation.siemens.com/WW/CAXorder/default.aspx?lang=en&mlfb=3SU14011BF601AA0

Service&Support (Manuals, Certificates, Characteristics, FAQs,...)
https://support.industry.siemens.com/cs/ww/en/ps/3SU14011BF601AA0

Image database (product images, 2D dimension drawings, 3D models, device circuit diagrams, EPLAN macros, ...)
http://www.automation.siemens.com/bilddb/cax_de.aspx?mlfb=3SU14011BF601AA0&lang=en

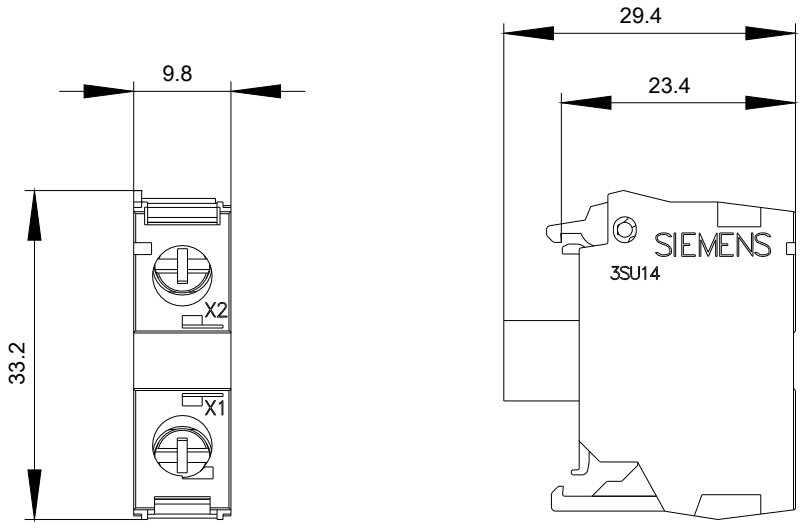

Changes preserved
© Copyright Siemens AG

-P

230 V AC

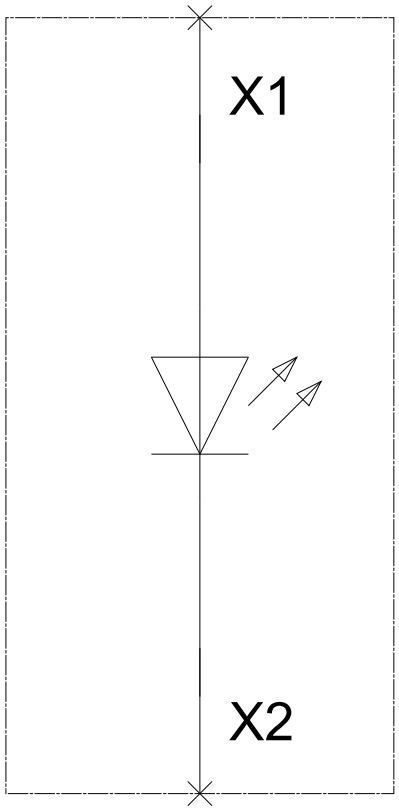

last modified: 12.10.2015

Changes preserved
© Copyright Siemens AG