SIEMENS

Data sheet 3SU1401-1BB40-1AA0

LED MODULE WITH INTEGRATED LED 24V AC/DC, GREEN, SCREW TERMINAL, FOR FRONT PLATE MOUNTING



Figure similar

product brand name	SIRIUS ACT
Product designation	Commanding and signaling devices
Design of the product	LED module

General technical data:	
Product component	
• diode	Yes
• lamp transformer	No
• Light source	Yes
• series resistor	No
Insulation voltage	
• Rated value	320 V
Surge voltage resistance Rated value	4 kV
Consumed current	
• maximum	20 mA
Protection class IP	
• of the enclosure	IP40
• of the terminal	IP20
Degree of pollution	3
Shock resistance	

Changes preserved
© Copyright Siemens AG

• acc. to IEC 60068-2-27	Sinusoidal half-wave 50 g / 11 ms
• for railway applications acc. to DIN EN 61373	Category 1, Class B
Vibration resistance	
• acc. to IEC 60068-2-6	10 ... 500 Hz: 5g
• for railway applications acc. to DIN EN 61373	Category 1, Class B
Operating period typical	100 000 h
Equipment marking	
• acc. to DIN EN 61346-2	P
• acc. to DIN EN 81346-2	P
Operating voltage 1	
• at AC	
— at 50 Hz Rated value	24 V
— at 60 Hz Rated value	24 V
• at DC Rated value	24 V
Relative positive tolerance of the operating voltage	20 %
Relative negative tolerance of the operating voltage	20 %

Connections/ Terminals:	
Type of electrical connection	screw-type terminals
Tightening torque	
• with screw-type terminals	0.8 ... 0.9 N·m

Lamp:	
Type of light source	LED
Color of the light source	green

Ambient conditions:	
Ambient temperature	
• during operation	-25 ... +70 °C
• during storage	-40 ... +80 °C
Environmental category during operation acc. to IEC 60721	3K6, 3S2, 3M6

Installation/ mounting/ dimensions:	
Mounting type	
• of modules and accessories	Front plate mounting
Height	33.2 mm
Width	9.8 mm
Depth	29.4 mm

Certificates/ approvals:

Changes preserved
© Copyright Siemens AG

General Product Approval			Declaration of Conformity	other
CCC	CSA	UL	EG-Konf.	Bestätigungen

Further information

Information- and Downloadcenter (Catalogs, Brochures,…)
http://www.siemens.com/industrial-controls/catalogs

Industry Mall (Online ordering system)
https://mall.industry.siemens.com/mall/en/en/Catalog/product?mlfb=3SU14011BB401AA0

Cax online generator
http://support.automation.siemens.com/WW/CAXorder/default.aspx?lang=en&mlfb=3SU14011BB401AA0

Service&Support (Manuals, Certificates, Characteristics, FAQs,...)
https://support.industry.siemens.com/cs/ww/en/ps/3SU14011BB401AA0

Image database (product images, 2D dimension drawings, 3D models, device circuit diagrams, EPLAN macros, ...)
http://www.automation.siemens.com/bilddb/cax_de.aspx?mlfb=3SU14011BB401AA0&lang=en

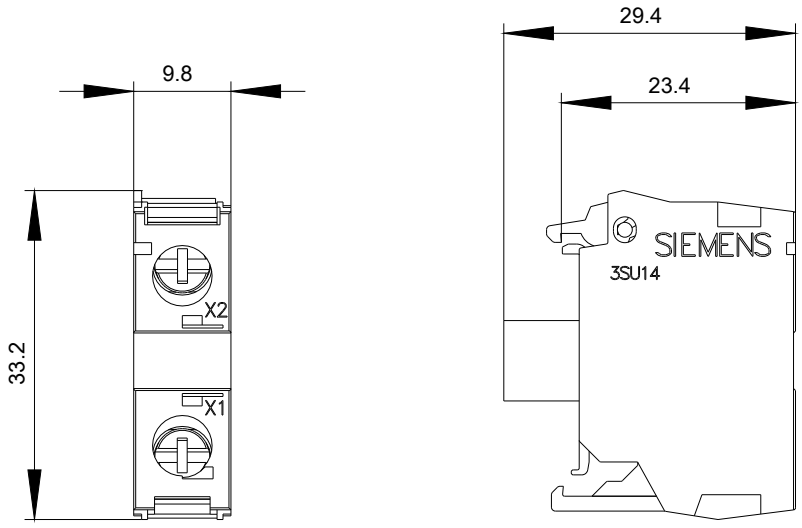

Changes preserved
© Copyright Siemens AG

-P

24 V AC/DC

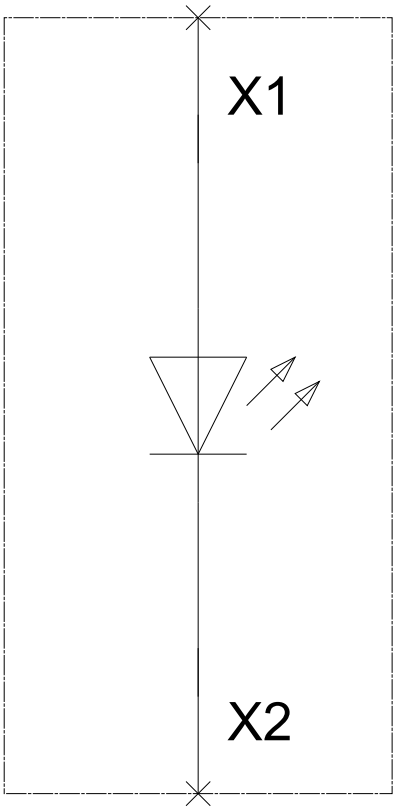

last modified: 12.10.2015

Changes preserved
© Copyright Siemens AG