SIEMENS

Data sheet 3SU1060-4LF21-0AA0



Figure similar

RONIS KEY-OPERATED SWITCH, 30MM, ROUND, METAL, MATT, FRONT RING FOR FLAT INSTALL., LOCK NO. SB30, WITH 2 KEYS, 2 SWITCH POSITIONS O-I, LATCHING, ACTUATING ANGLE 90 DEG., 10:30H/13:30H, KEY REMOVAL POS. I, POSSIBLE SPECIAL LOCKS: SB31, 421, 455

product brand name	SIRIUS ACT
Product designation	Commanding and signaling devices
Design of the product	Key-operated switch
Actuator:	
Design of the operating mechanism	Key-operated switch
Manner of function of the actuating element	latching, 90° (10:30 h/13:30 h)
Product expansion optional Light source	No
Color	
• of the actuating element	Silver
Material of the actuating element	metal
Shape of the actuating element	Key
Outer diameter of the actuating element	38 mm
Number of switching positions	2
Switch position for key distraction	I
Actuating angle	
• clockwise	90°
Lock make	RONIS
Key number	SB30
Front ring:	

Changes preserved
© Copyright Siemens AG

Product component front ring	Yes
Design of the front ring	Standard
Material of the front ring	Metal, matt
Color of the front ring	sand gray

General technical data:

Protection class IP	IP66, IP67, IP69(IP69K)
• of the terminal	IP20
Degree of protection NEMA	NEMA 1, 2, 3, 3R, 4, 4X, 12
Shock resistance	
• acc. to IEC 60068-2-27	Sinusoidal half-wave 50 g / 11 ms
• for railway applications acc. to DIN EN 61373	Category 1, Class B
Vibration resistance	
• acc. to IEC 60068-2-6	10 ... 500 Hz: 5g
• for railway applications acc. to DIN EN 61373	Category 1, Class B
Operating frequency maximum	1 800 1/h
Mechanical service life (switching cycles)	
• typical	300 000
Equipment marking	
• acc. to DIN EN 61346-2	S
• acc. to DIN EN 81346-2	S

Ambient conditions:

Ambient temperature	
• during operation	-25 ... +70 °C
• during storage	-40 ... +80 °C

Installation/ mounting/ dimensions:

Height	44.8 mm
Width	38 mm
Shape of the installation opening	round
Mounting diameter	30 mm
Mounting height	42.7 mm
Installation width	38 mm
Installation depth	32.1 mm

Certificates/ approvals:

General Product Approval		For use in hazardous locations	Declaration of Conformity	other	Railway
CSA	UL	Herstellererklärung	EG-Konf.	Bestätigungen	Bestätigungen

Changes preserved
© Copyright Siemens AG

Further information

Information- and Downloadcenter (Catalogs, Brochures,…)
http://www.siemens.com/industrial-controls/catalogs

Industry Mall (Online ordering system)
https://mall.industry.siemens.com/mall/en/en/Catalog/product?mlfb=3SU10604LF210AA0

Cax online generator
http://support.automation.siemens.com/WW/CAXorder/default.aspx?lang=en&mlfb=3SU10604LF210AA0

Service&Support (Manuals, Certificates, Characteristics, FAQs,...)
https://support.industry.siemens.com/cs/ww/en/ps/3SU10604LF210AA0

Image database (product images, 2D dimension drawings, 3D models, device circuit diagrams, EPLAN macros, ...)
http://www.automation.siemens.com/bilddb/cax_de.aspx?mlfb=3SU10604LF210AA0&lang=en

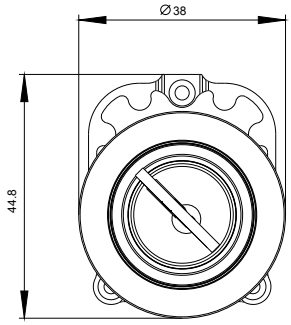

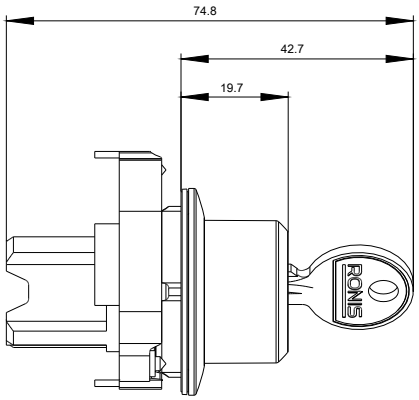

last modified: 15.10.2015

Changes preserved
© Copyright Siemens AG