SIEMENS

Data sheet 3SU1032-2BL40-0AA0

SELECTOR SWITCH, CAN BE ILLUM., 22MM, ROUND, PLASTIC WITH METAL FRONT RING, GREEN, SHORT SELECTOR SWITCH, 3 SWITCH POSITIONS I-O-II, LATCHING, ACTUATING ANGLE 2X45 DEG., 10:30H/12H/13:30H



Figure similar

product brand name	SIRIUS ACT
Product designation	Control and signaling units
Design of the product	Selector switch
Actuator:	
Design of the operating mechanism	Selector switch, short black handle
Manner of function of the actuating element	maintained, 2x45° (10:30h/12h/13:30h)
Product expansion optional Light source	Yes
Color of the actuating element	Green
Material of the actuating element	plastic
Shape of the actuating element	Handle
Outer diameter of the actuating element	32.3 mm
Number of switching positions	3
Actuating angle	
• clockwise	45°
• anticlockwise	45°
Front ring:	
Product component front ring	Yes
Design of the front ring	standard
Material of the front ring	Metal, matt

Changes preserved
© Copyright Siemens AG

Color of the front ring	sand gray

General technical data:

Protection class IP	IP66, IP67, IP69(IP69K)
Degree of protection NEMA	NEMA 1, 2, 3, 3R, 4, 4X, 12
Shock resistance	
• acc. to IEC 60068-2-27	Sinusoidal half-wave 50 g / 11 ms
• for railway applications acc. to DIN EN 61373	Category 1, Class B
Vibration resistance	
• acc. to IEC 60068-2-6	10 ... 500 Hz: 5g
• for railway applications acc. to DIN EN 61373	Category 1, Class B
Operating frequency maximum	1 800 1/h
Mechanical service life (switching cycles)	
• typical	1 000 000
Equipment marking	
• acc. to DIN EN 61346-2	S
• acc. to DIN EN 81346-2	S

Ambient conditions:

Ambient temperature	
• during operation	-25 ... +70 °C
• during storage	-40 ... +80 °C

Installation/ mounting/ dimensions:

Height	32.3 mm
Width	32.3 mm
Shape of the installation opening	round
Mounting diameter	22 mm
Mounting height	28.8 mm
Installation width	32.3 mm
Installation depth	25.4 mm

Certificates/ approvals:

General Product Approval		For use in hazardous locations	Declaration of Conformity	other	Railway
CSA	UL	Herstellererklärung	EG-Konf.	Bestätigungen	Bestätigungen

Further information

Information- and Downloadcenter (Catalogs, Brochures,…)
http://www.siemens.com/industrial-controls/catalogs

Changes preserved
© Copyright Siemens AG

Industry Mall (Online ordering system)
https://mall.industry.siemens.com/mall/en/en/Catalog/product?mlfb=3SU10322BL400AA0

Cax online generator
http://support.automation.siemens.com/WW/CAXorder/default.aspx?lang=en&mlfb=3SU10322BL400AA0

Service&Support (Manuals, Certificates, Characteristics, FAQs,...)
https://support.industry.siemens.com/cs/ww/en/ps/3SU10322BL400AA0

Image database (product images, 2D dimension drawings, 3D models, device circuit diagrams, EPLAN macros, ...)
http://www.automation.siemens.com/bilddb/cax_de.aspx?mlfb=3SU10322BL400AA0&lang=en

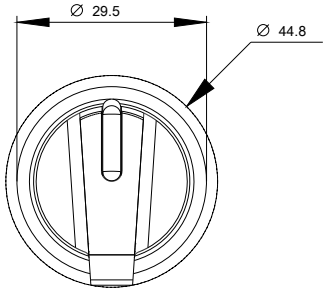

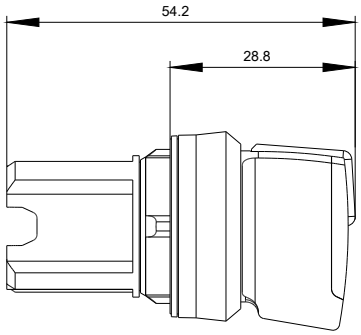

last modified: 15.10.2015

Changes preserved
© Copyright Siemens AG