SIEMENS

Data sheet 3SU1001-6AA00-0AA0

	INDICATOR LIGHT, 22MM, ROUND, PLASTIC, AMBER, SMOOTH LENS
product brand name	SIRIUS ACT
Product designation	Commanding and signaling devices
Design of the product	Pilot Light

Actuator:

Color	
• of the actuating element	Amber
Material of the actuating element	plastic
Shape of the actuating element	round
Outer diameter of the actuating element	29.45 mm

Front ring:

Product component front ring	No

General technical data:

Protection class IP	IP66, IP67, IP69(IP69K)
Degree of protection NEMA	NEMA 1, 2, 3, 3R, 4, 4X, 12
Shock resistance	
• acc. to IEC 60068-2-27	Sinusoidal half-wave 50 g / 11 ms
• for railway applications acc. to DIN EN 61373	Category 1, Class B
Vibration resistance	
• acc. to IEC 60068-2-6	10 ... 500 Hz: 5g
• for railway applications acc. to DIN EN 61373	Category 1, Class B
Equipment marking	
• acc. to DIN EN 61346-2	P
• acc. to DIN EN 81346-2	P

Ambient conditions:

Ambient temperature	
• during operation	-25 ... +70 °C
• during storage	-40 ... +80 °C
Environmental category during operation acc. to IEC 60721	3K6, 3C3, 3S2, 3M6

Installation/ mounting/ dimensions:

Height	29.5 mm
Width	29.5 mm
Shape of the installation opening	round
Mounting diameter	22 mm

Changes preserved
© Copyright Siemens AG

Mounting height	11.8 mm
Installation width	29.5 mm
Installation depth	24.4 mm

Certificates/ approvals:

General Product Approval		Declaration of Conformity	other	Railway
CSA	UL	EG-Konf.	Bestätigungen	Bestätigungen

Further information

Information- and Downloadcenter (Catalogs, Brochures,…)
http://www.siemens.com/industrial-controls/catalogs

Industry Mall (Online ordering system)
https://mall.industry.siemens.com/mall/en/en/Catalog/product?mlfb=3SU10016AA000AA0

Cax online generator
http://support.automation.siemens.com/WW/CAXorder/default.aspx?lang=en&mlfb=3SU10016AA000AA0

Service&Support (Manuals, Certificates, Characteristics, FAQs,...)
https://support.industry.siemens.com/cs/ww/en/ps/3SU10016AA000AA0

Image database (product images, 2D dimension drawings, 3D models, device circuit diagrams, EPLAN macros, ...)
http://www.automation.siemens.com/bilddb/cax_de.aspx?mlfb=3SU10016AA000AA0&lang=en

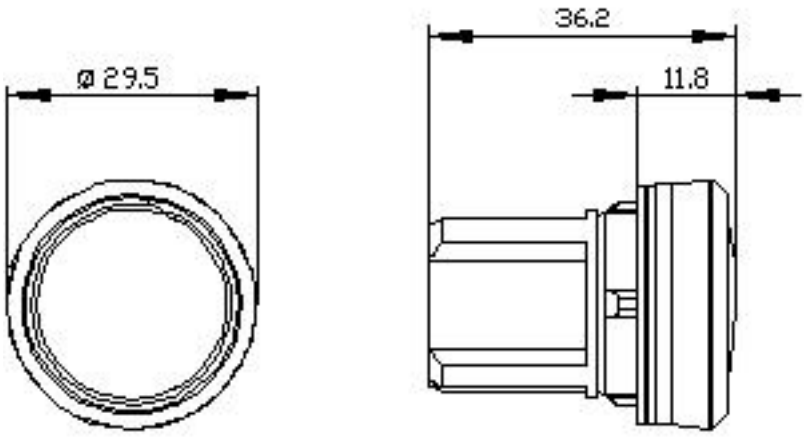

last modified: 15.10.2015

Changes preserved
© Copyright Siemens AG