SIEMENS

## Data sheet 3SU1950-0FC80-0AA0

| | |
|---|---|
| | KEY FOR RONIS KEY-OPERATED SWITCH, LOCK NO. 455 |
| **product brand name** | SIRIUS ACT |
| **Product designation** | Commanding and signaling devices |
| **Design of the product** | Ronis key |

### Actuator:

| | |
|---|---|
| **Key number** | 455 |

### Installation/ mounting/ dimensions:

| | |
|---|---|
| **Height** | 20 mm |
| **Width** | 2 mm |
| **Depth** | 41.7 mm |

### Accessories:

| | |
|---|---|
| **Material of accessory** | Metal |
| **Color of accessory** | Silver |

### Certificates/ approvals:

| General Product Approval | Declaration of Conformity | other |
|---|---|---|
| CSA UL | EG-Konf. | Bestätigungen |

### Further information

**Information- and Downloadcenter (Catalogs, Brochures,…)**
http://www.siemens.com/industrial-controls/catalogs

**Industry Mall (Online ordering system)**
https://mall.industry.siemens.com/mall/en/en/Catalog/product?mlfb=3SU19500FC800AA0

**Cax online generator**
http://support.automation.siemens.com/WW/CAXorder/default.aspx?lang=en&mlfb=3SU19500FC800AA0

**Service&Support (Manuals, Certificates, Characteristics, FAQs,...)**
https://support.industry.siemens.com/cs/ww/en/ps/3SU19500FC800AA0

**Image database (product images, 2D dimension drawings, 3D models, device circuit diagrams, EPLAN macros, ...)**
http://www.automation.siemens.com/bilddb/cax_de.aspx?mlfb=3SU19500FC800AA0&lang=en


Changes preserved
© Copyright Siemens AG

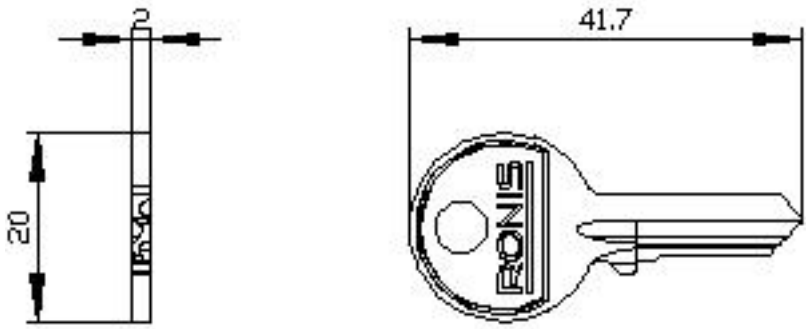


**last modified:** 15.10.2015


Changes preserved
© Copyright Siemens AG