SIEMENS

Data sheet 3SU1950-0FB80-0AA0

	KEY FOR RONIS KEY-OPERATED SWITCH, LOCK NO. SB30
product brand name	SIRIUS ACT
Product designation	Commanding and signaling devices
Design of the product	Ronis key

Actuator:

Key number	SB30

Installation/ mounting/ dimensions:

Height	20 mm
Width	2 mm
Depth	41.7 mm

Accessories:

Material of accessory	Metal
Color of accessory	Silver

Certificates/ approvals:

General Product Approval	Declaration of Conformity	other
CSA UL	EG-Konf.	Bestätigungen

Further information

Information- and Downloadcenter (Catalogs, Brochures,…)
http://www.siemens.com/industrial-controls/catalogs

Industry Mall (Online ordering system)
https://mall.industry.siemens.com/mall/en/en/Catalog/product?mlfb=3SU19500FB800AA0

Cax online generator
http://support.automation.siemens.com/WW/CAXorder/default.aspx?lang=en&mlfb=3SU19500FB800AA0

Service&Support (Manuals, Certificates, Characteristics, FAQs,...)
https://support.industry.siemens.com/cs/ww/en/ps/3SU19500FB800AA0

Image database (product images, 2D dimension drawings, 3D models, device circuit diagrams, EPLAN macros, ...)
http://www.automation.siemens.com/bilddb/cax_de.aspx?mlfb=3SU19500FB800AA0&lang=en

Changes preserved
© Copyright Siemens AG

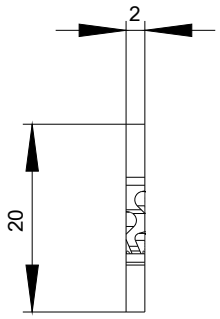

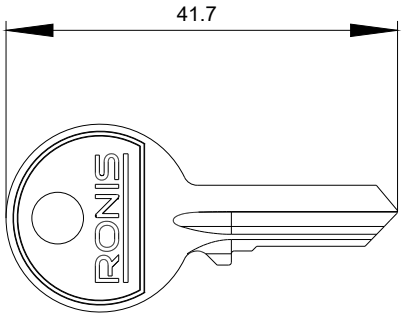

last modified: 15.10.2015

Changes preserved
© Copyright Siemens AG