SIEMENS

Data sheet 3SU1900-0AH10-0AA0

LABEL HOLDER, FLAT, FRAME WITH ROUNDED BOTTOM, BLACK, FOR LABELING PLATE 17.5MM X 27MM



Figure similar

product brand name	SIRIUS ACT
Product designation	Commanding and signaling devices
Design of the product	Label holder for labling plate
Actuator:	
Design of the operating mechanism	Label 17,5 x 27mm
General technical data:	
Protection class IP	IP66, IP67, IP69(IP69K)
Shock resistance	
• for railway applications acc. to DIN EN 61373	Category 1, Class B
Vibration resistance	
• for railway applications acc. to DIN EN 61373	Category 1, Class B
Installation/ mounting/ dimensions:	
Height	49.8 mm
Width	29.8 mm
Accessories:	
Material of accessory	Plastic
Shape of label holder	rounded below
Color of label holder	Black

Changes preserved
© Copyright Siemens AG

Mounting type of label	stick

Certificates/ approvals:

General Product Approval	For use in hazardous locations	Declaration of Conformity	other
CSA UL	Herstellererklärung	EG-Konf.	Bestätigungen

Further information

Information- and Downloadcenter (Catalogs, Brochures,…)
http://www.siemens.com/industrial-controls/catalogs

Industry Mall (Online ordering system)
https://mall.industry.siemens.com/mall/en/en/Catalog/product?mlfb=3SU19000AH100AA0

Cax online generator
http://support.automation.siemens.com/WW/CAXorder/default.aspx?lang=en&mlfb=3SU19000AH100AA0

Service&Support (Manuals, Certificates, Characteristics, FAQs,...)
https://support.industry.siemens.com/cs/ww/en/ps/3SU19000AH100AA0

Image database (product images, 2D dimension drawings, 3D models, device circuit diagrams, EPLAN macros, ...)
http://www.automation.siemens.com/bilddb/cax_de.aspx?mlfb=3SU19000AH100AA0&lang=en

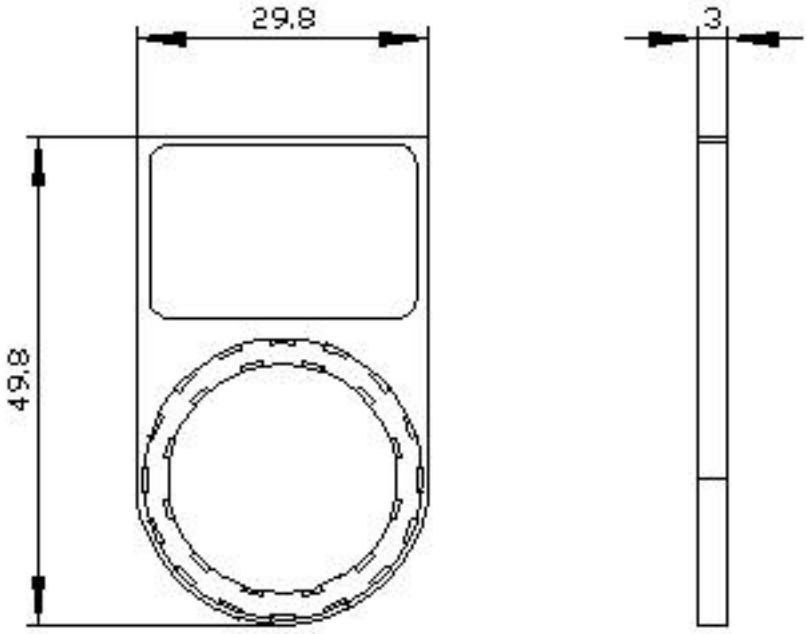

last modified: 15.10.2015

Changes preserved
© Copyright Siemens AG