

Auxiliary contact, operates as an early-make contact, 2N/O early

Part no. VHI20-PKZ0
Article no. 203595
Catalog No. XTPAXFAEM20

Powering Business Worldwide

Delivery programme

Product range			Accessories
Accessories			Auxiliary contacts, early-make
Contacts			
N/O = Normally open			2 N/O
Contact sequence			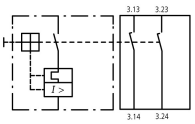
For use with			PKZM0 PKZM0-T PKM0 PKZM4

Notes

Can be fitted to front on motor-protective circuit-breaker, 45 mm width of the motor-protective circuit-breaker remains unchanged.

For early energization of undervoltage release, e.g. in Emergency-Stop circuits to EN 60204.

VHI20-PKZ0 cannot be used in combination with PKZ0-X(R)M.

Technical data

Auxiliary contacts

Rated impulse withstand voltage	U_{imp}	V AC	4000
Overvoltage category/pollution degree			III/3
Rated operational voltage	U_e	V	
	U_e	V AC	440
	U_e	V DC	250
Safe isolation to EN 61140			
Between auxiliary contacts and main contacts		V AC	690
Rated operational current	I_e	A	
AC-15			
220 - 240 V	I_e	A	1
DC-13 L/R - 100 ms			
24 V	I_e	A	2
Lifespan		S	
Lifespan, mechanical	Operations	x 10^6	> 0.1
Lifespan, electrical	Operations	x 10^6	0.1
Short-circuit rating without welding			
Fuse		A gG/gL	10

Terminal capacities

Solid or flexible conductor, with ferrule		mm^2	0,75 - 1,5
Solid or stranded		AWG	18 - 16

Data for design verification according to IEC/EN 61439

Technical data for design verification			
Rated operational current for specified heat dissipation	I_n	A	1
Heat dissipation per pole, current-dependent	P_{vid}	W	0.03
Equipment heat dissipation, current-dependent	P_{vid}	W	0
Static heat dissipation, non-current-dependent	P_{vs}	W	0
Heat dissipation capacity	P_{diss}	W	0
IEC/EN 61439 design verification			
10.2 Strength of materials and parts			

10.2.2 Corrosion resistance			Meets the product standard's requirements.
10.2.3.1 Verification of thermal stability of enclosures			Meets the product standard's requirements.
10.2.3.2 Verification of resistance of insulating materials to normal heat			Meets the product standard's requirements.
10.2.3.3 Verification of resistance of insulating materials to abnormal heat and fire due to internal electric effects			Meets the product standard's requirements.
10.2.4 Resistance to ultra-violet (UV) radiation			Meets the product standard's requirements.
10.2.5 Lifting			Does not apply, since the entire switchgear needs to be evaluated.
10.2.6 Mechanical impact			Does not apply, since the entire switchgear needs to be evaluated.
10.2.7 Inscriptions			Meets the product standard's requirements.
10.3 Degree of protection of ASSEMBLIES			Does not apply, since the entire switchgear needs to be evaluated.
10.4 Clearances and creepage distances			Meets the product standard's requirements.
10.5 Protection against electric shock			Does not apply, since the entire switchgear needs to be evaluated.
10.6 Incorporation of switching devices and components			Does not apply, since the entire switchgear needs to be evaluated.
10.7 Internal electrical circuits and connections			Is the panel builder's responsibility.
10.8 Connections for external conductors			Is the panel builder's responsibility.
10.9 Insulation properties			
10.9.2 Power-frequency electric strength			Is the panel builder's responsibility.
10.9.3 Impulse withstand voltage			Is the panel builder's responsibility.
10.9.4 Testing of enclosures made of insulating material			Is the panel builder's responsibility.
10.10 Temperature rise			The panel builder is responsible for the temperature rise calculation. Eaton will provide heat dissipation data for the devices.
10.11 Short-circuit rating			Is the panel builder's responsibility. The specifications for the switchgear must be observed.
10.12 Electromagnetic compatibility			Is the panel builder's responsibility. The specifications for the switchgear must be observed.
10.13 Mechanical function			The device meets the requirements, provided the information in the instruction leaflet (IL) is observed.

Technical data ETIM 5.0

Low-voltage industrial components (EG000017) / Auxiliary contact block (EC000041)			
Electric engineering, automation, process control engineering / Low-voltage switch technology / Component for low-voltage switching technology / Auxiliary switch block (ecl@ss8-27-37-13-02 [AKN342009])			
Number of contacts as change-over contact			0
Number of contacts as normally open contact			2
Number of contacts as normally closed contact			0
Rated operation current Ie at AC-15, 230 V		A	1
Type of electric connection			Screw connection
Mounting method			Front fastening

Approvals

Product Standards			UL 508; CSA-C22.2 No. 14; IEC60947-4-1; CE marking
UL File No.			E36332
UL Category Control No.			NLRV
CSA File No.			165628
CSA Class No.			3211-05
North America Certification			UL listed, CSA certified
Specially designed for North America			No

Dimensions

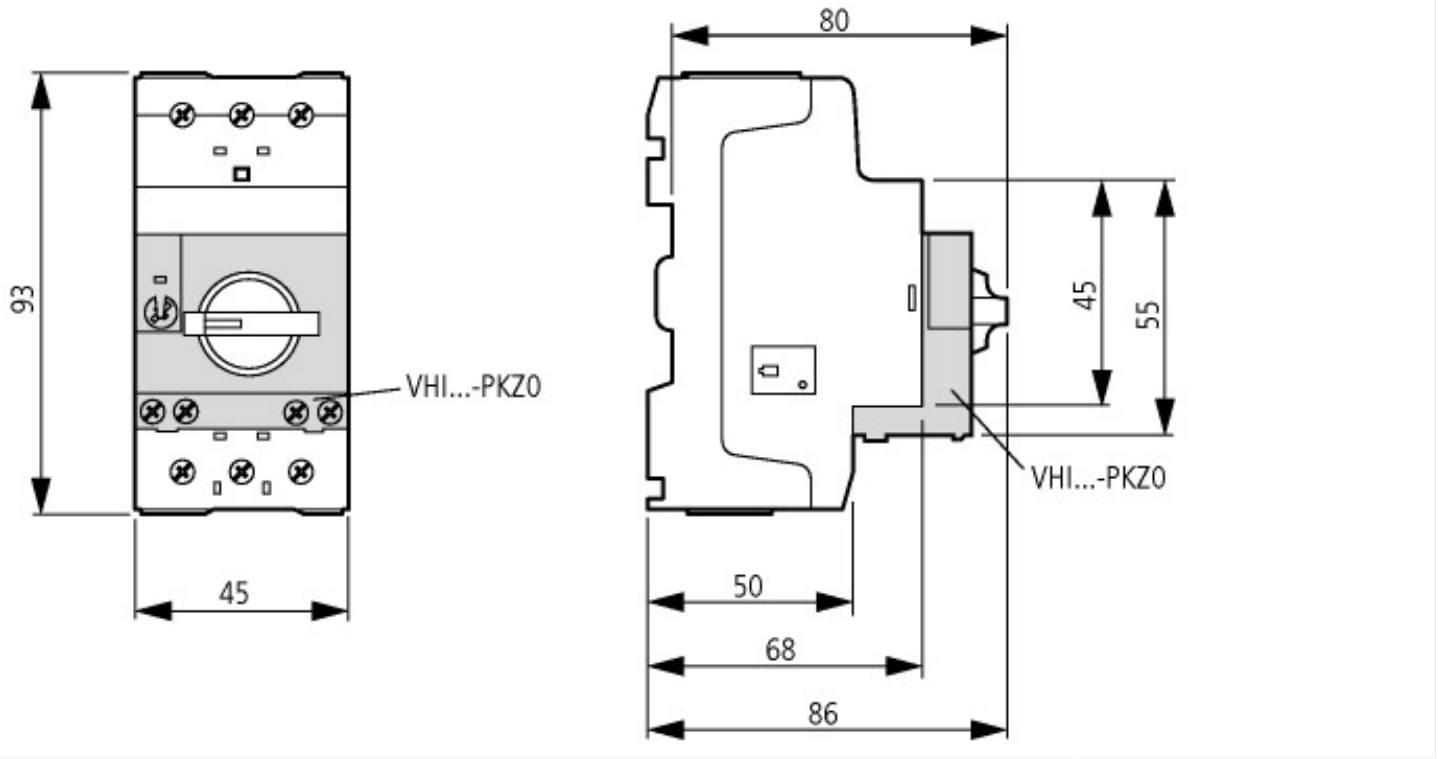

Additional product information (links)

IL03402033Z (AWA1210-1659) Early-make auxiliary contact	
IL03402033Z (AWA1210-1659) Early-make auxiliary contact	ftp://ftp.moeller.net/DOCUMENTATION/AWA_INSTRUCTIONS/IL03402033Z2013_05.pdf
Motor starters and "Special Purpose Ratings" for the North American market	http://www.moeller.net/binary/ver_techpapers/ver953en.pdf
Busbar Component Adapters for modern Industrial control panels	http://www.moeller.net/binary/ver_techpapers/ver960en.pdf

© 12/2014 by Eaton Industries GmbH