

Tunnel terminal 4p 2x240mm2 w. cover

Part no. NZM3-4-XKA2
Article no. 271462

Powering Business Worldwide™

Delivery programme

Accessories			Tunnel terminal
Number of conductors			4 pole
Rated current	I_n	A	630
For use with			NZM3(-4), PN3(-4), N(S)3(-4)
Terminal capacities			
Type of conductor			
Cu/Al cable			Copper cable Al cable
Terminal capacities			
flexible		mm^2	1 x 50 - 240 2 x 50 - 240
AWG/kcmil			
flexible		mm^2	1 x 0 - 500 2 x 0 - 500

Notes

Type contains parts for a terminal located at top or bottom for 3 or 4-pole circuit-breakers.

A standard with control circuit terminal for 1 x 0.75 - 2.5 mm^2 (18 - 14 AWG) or 2 x 0.75 - 1.5 mm^2 (18 - 16 AWG) copper conductors.

Fitted outside the switch housing

Use with flexible and highly flexible conductors ferrules. Maximum specified cross-section can only be connected when stranded and without ferrules.

Mounting of the cover NZM3(-4)-XKSA obligatory (supplied).

Technical data ETIM 4.0

Suitable for number of poles			4
Type			-

Dimensions

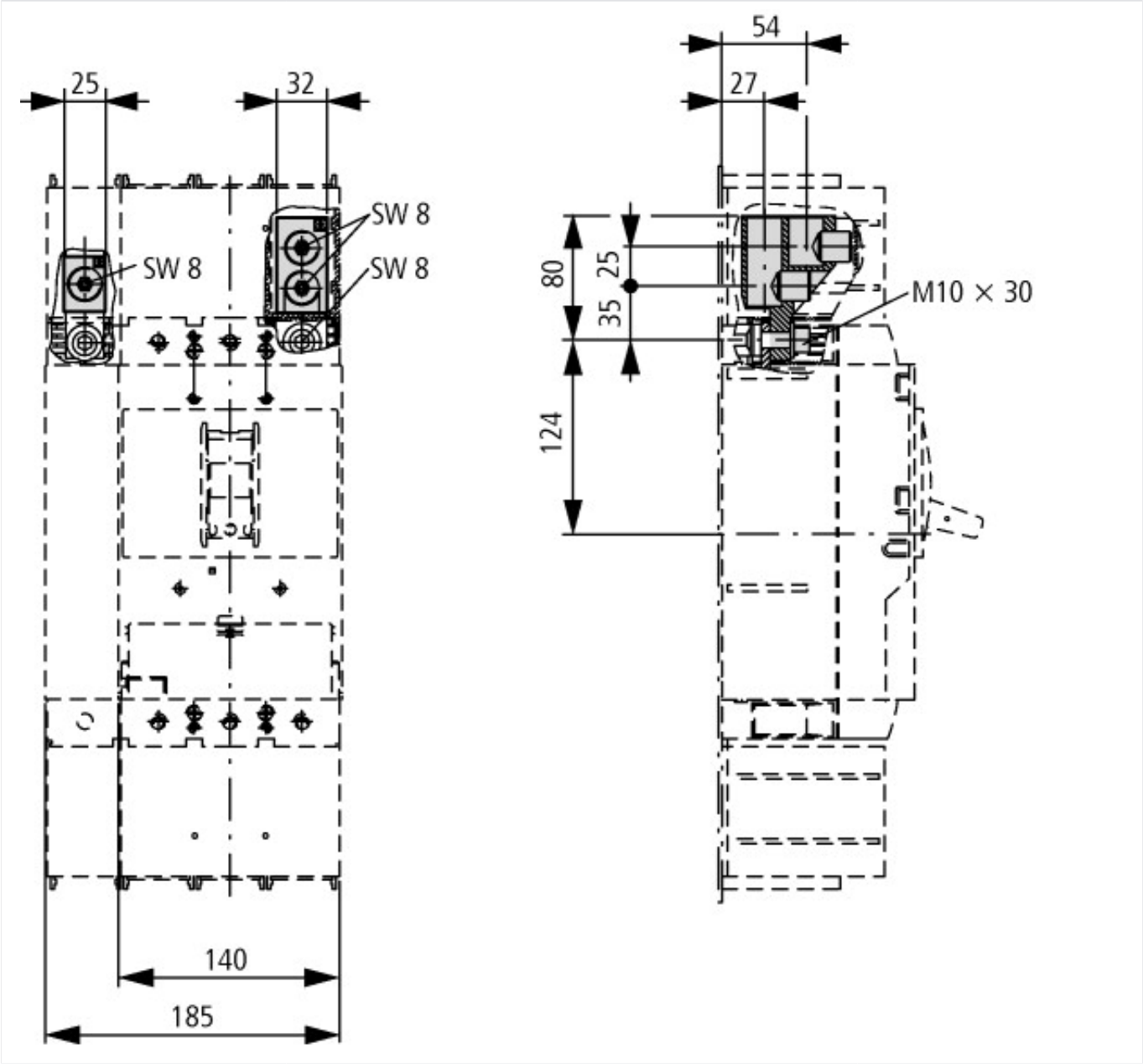

Additional product information (links)

IL01210007Z (AWA1230-2050) Tunnel terminal	
IL01210007Z (AWA1230-2050) Tunnel terminal	ftp://ftp.moeller.net/DOCUMENTATION/AWA_INSTRUCTIONS/IL01210007Z2012_02.pdf

© 11/2012 by Eaton Industries GmbH