

LED flashing light, red 230V

Part no. SL7-BL230-R
Article no. 171398
Catalog No. SL7-BL230-R

Powering Business Worldwide

Delivery programme

Product range			SL7 signal towers
Basic function			Flashing light module
Degree of Protection			IP66
Rated operational voltage	U_e	V	230/240 V AC
Type of light			Flashing light
Light elements			LED
Colour			
			Red
			
Function			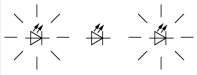
Connection to SmartWire-DT			no

Technical data

General

Standards			IEC/EN 60947-5-1
Climatic proofing			Damp heat, constant, to IEC 60068-2-78 Damp heat, cyclic, to IEC 60069-2-30
Mounting position			As required
Mechanical shock resistance		g	> 15 according to IEC 60068-2-27 Shock duration 11 ms Sinusoidal
IEC degree of protection			IP66 IEC/EN 60529
Protection type UL			Type 4, 4X, 13
Material			Enclosure: Polycarbonate (PC), black Cap: Polycarbonate (PC)
Cap colour			
			Red
Ambient temperature		°C	-30 - +60
Number of signal elements			Max. 5 with standard base Max. 10 with base for mounting on both sides
Weight		g	80

Contacts

Rated impulse withstand voltage	U_{imp}	V AC	4000
Rated insulation voltage	U_i	V	250
Overvoltage category/pollution degree			III/3

modules

Type of light			Flashing light
Light elements			LED
Flashing/strobe frequency			2 Hz
Leakage current		A	< 0.003
lifespan		h	> 100000
Transmission angle			360°
Current-/power consumption			
230 /240V AC		A	0.030 - 0.031
Voltage levels			230/240 V AC ± 10 %

Technical data ETIM 5.0

Low-voltage industrial components (EG000017) / Optical module for signal tower (EC000232)

Electric engineering, automation, process control engineering / Low-voltage switch technology / Command and alarm device / Optical module for signal tower (ecl@ss8-27-37-12-20 [AKF038010])

Function		Blinker light
Colour		Red
Outer diameter	mm	73
Degree of protection (IP)		IP66
Operating voltage at AC 50 Hz	V	230 - 240
Operating voltage at AC 60 Hz	V	230 - 240
Operating voltage at DC	V	0 - 0
Voltage type		AC
Type of lamp		LED
Colour housing		Black

Approvals

Product Standards		IEC/EN 60947-5-1; UL 508; CSA-C22.2 No. 14-10; CSA-C22.2 No. 94-91; CE marking
UL File No.		E29184
UL Category Control No.		NKCR
CSA File No.		UL report applies to both US and Canada
CSA Class No.		NKCR7
North America Certification		UL listed, certified by UL for use in Canada
Degree of Protection		UL Type 4, 4X, 13

Dimensions

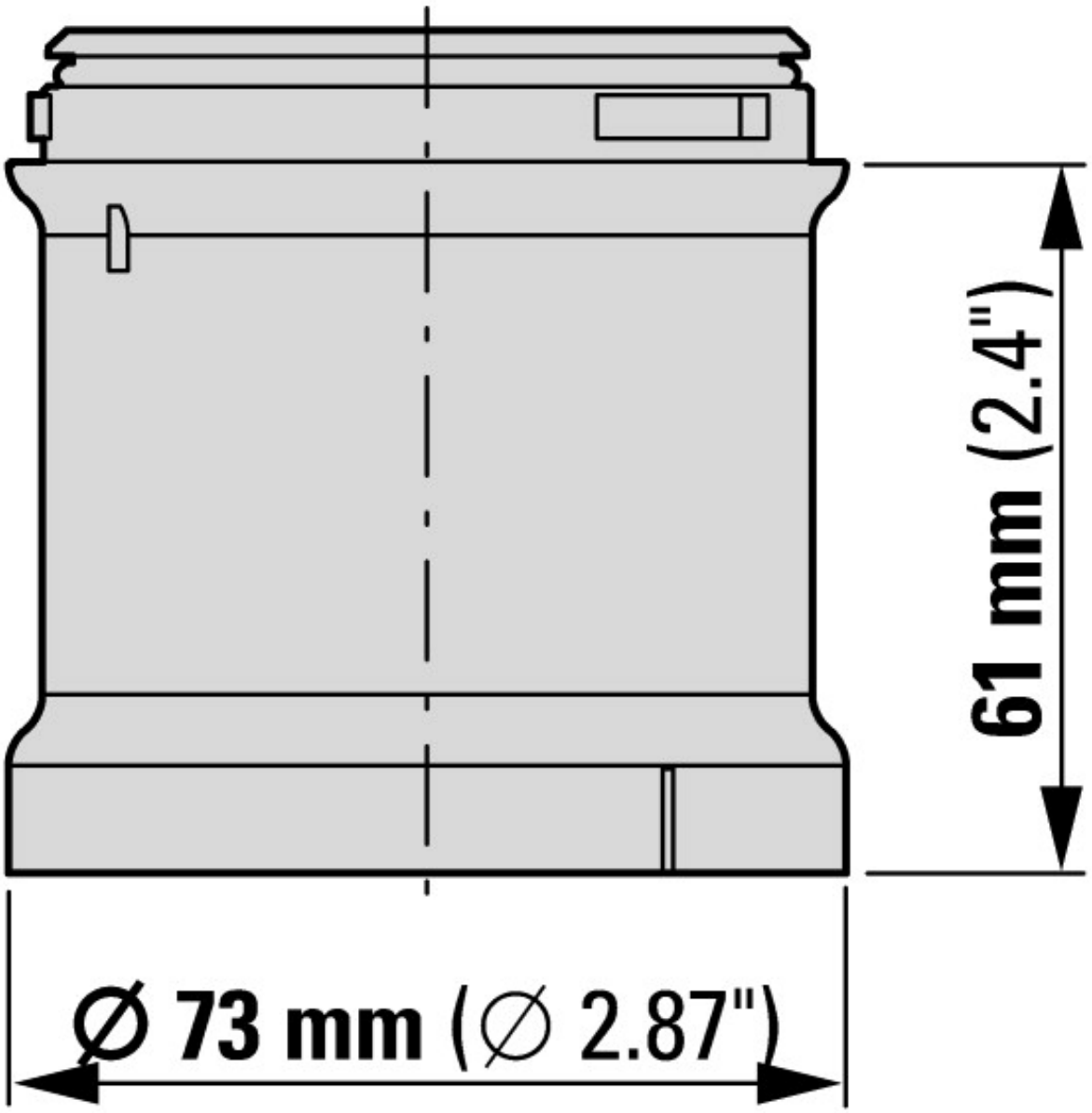

Additional product information (links)

IL047004ZU SL7 Light Modules, Tone Modules	
IL047004ZU SL7 Light Modules, Tone Modules	ftp://ftp.moeller.net/DOCUMENTATION/AWA_INSTRUCTIONS/IL047004ZU2013_02.pdf
IL047004ZU SL7, modules lumineux, modules sonores	ftp://ftp.moeller.net/DOCUMENTATION/AWA_INSTRUCTIONS/IL047004ZU2013_02.pdf

© 12/2014 by Eaton Industries GmbH