

Switch-disconnector, 3p+N, 63A, +rotary handle

Part no. DMM-63/1
Article no. 1314161

Powering Business Worldwide

Delivery programme

Product range			Switch-disconnector Main switch maintenance switch
Part group reference			DMM
			With black rotary handle and drive shaft Vertical connection
Notes			auxiliary contact fitted by user
Number of poles			3 pole + N
Auxiliary contacts			
		N/O	0
		N/C	0
Locking facility			Lockable in the 0 (Off) position 1 padlock, Ø 5 mm
Degree of Protection			IP20
Design			surface mounting
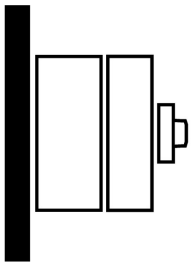			
Rated uninterrupted current	I_u	A	63

Technical data

General

Standards			IEC/EN 60947, VDE 0660, IEC/EN 60204, Switch-disconnector according to IEC/EN 60947-3
Certifications			CE, RoHs, KEMA, GOST-R, Lloyds
Ambient temperature		°C	
Operation	ϑ	°C	-25 - +55
Storage	ϑ	°C	-30 - +80
Overvoltage category/pollution degree			III/3
Rated impulse withstand voltage	U_{imp}	V AC	6000
Rated insulation voltage	U_i	V AC	1000
Mounting position			As required
Protection against direct contact when actuated from front (EN 50274)			Finger and back-of-hand proof

Contacts

Mechanical variables			
Number of poles			3 pole + N
Auxiliary contacts			
		N/O	0
		N/C	0
Electrical characteristics			
Rated operational voltage	U_e	V AC	690
Rated uninterrupted current	I_u	A	63

Note on rated uninterrupted current $!_u$			Rated uninterrupted current Iu is specified for max. cross-section.
Short-circuit rating			
fuse			80/50
Rated conditional short-circuit current	Iq	kA	In = 80: 50 In = 50: 100
Breaking current		kA	In = 80: 9.7 In = 50: 9.6
max. let-through energy		kA^2s	In = 80: 44 In = 50: 10
Rated short-time withstand current (1 s current)	I_{cw}	A_{rms}	1500
Note on rated short-time withstand current Icw			Current for a time of 1 second

Switching capacity

Rated breaking capacity cos φ to IEC 60947-3		A	
400/415 V		A	504
500 V		A	264
690 V		A	200
Safe isolation to EN 61140			
Current heat loss per contact at I_e		W	6
Lifespan, mechanical	Operations		8500
AC			
AC-21A			
Rated operational current switch			
400 V 415 V	I_e	A	63
500 V	I_e	A	63
690 V	I_e	A	63
AC-22A			
Rated operational current switch			
400 V 415 V	I_e	A	63
500 V	I_e	A	63
690 V	I_e	A	63
AC-23A			
Rated operational current switch			
400 V 415 V	I_e	A	63
500 V	I_e	A	33
690 V	I_e	A	25
Motor rating AC-23A, 50 - 60 Hz	P	kW	
400 V 415 V	P	kW	30
500 V	P	kW	22
690 V	P	kW	22

Terminal capacities

Flexible with ferrules to DIN 46228		mm^2	
flexible		mm^2	1.5 - 25
Max. tightening torque		Nm	3

Technical safety parameters:

Notes			$B10_d$ values as per EN ISO 13849-1, table C1

Data for design verification according to IEC/EN 61439

Technical data for design verification			
Rated operational current for specified heat dissipation	I_n	A	63
Heat dissipation per pole, current-dependent	P_{vid}	W	6
Equipment heat dissipation, current-dependent	P_{vid}	W	0
Static heat dissipation, non-current-dependent	P_{vs}	W	0
Heat dissipation capacity	P_{diss}	W	0
IEC/EN 61439 design verification			
10.2 Strength of materials and parts			

10.2.2 Corrosion resistance			Meets the product standard's requirements.
10.2.3.1 Verification of thermal stability of enclosures			Meets the product standard's requirements.
10.2.3.2 Verification of resistance of insulating materials to normal heat			Meets the product standard's requirements.
10.2.3.3 Verification of resistance of insulating materials to abnormal heat and fire due to internal electric effects			Meets the product standard's requirements.
10.2.4 Resistance to ultra-violet (UV) radiation			Meets the product standard's requirements.
10.2.5 Lifting			Does not apply, since the entire switchgear needs to be evaluated.
10.2.6 Mechanical impact			Does not apply, since the entire switchgear needs to be evaluated.
10.2.7 Inscriptions			Meets the product standard's requirements.
10.3 Degree of protection of ASSEMBLIES			Does not apply, since the entire switchgear needs to be evaluated.
10.4 Clearances and creepage distances			Meets the product standard's requirements.
10.5 Protection against electric shock			Does not apply, since the entire switchgear needs to be evaluated.
10.6 Incorporation of switching devices and components			Does not apply, since the entire switchgear needs to be evaluated.
10.7 Internal electrical circuits and connections			Is the panel builder's responsibility.
10.8 Connections for external conductors			Is the panel builder's responsibility.
10.9 Insulation properties			
10.9.2 Power-frequency electric strength			Is the panel builder's responsibility.
10.9.3 Impulse withstand voltage			Is the panel builder's responsibility.
10.9.4 Testing of enclosures made of insulating material			Is the panel builder's responsibility.
10.10 Temperature rise			The panel builder is responsible for the temperature rise calculation. Eaton will provide heat dissipation data for the devices.
10.11 Short-circuit rating			Is the panel builder's responsibility. The specifications for the switchgear must be observed.
10.12 Electromagnetic compatibility			Is the panel builder's responsibility. The specifications for the switchgear must be observed.
10.13 Mechanical function			The device meets the requirements, provided the information in the instruction leaflet (IL) is observed.

Technical data ETIM 5.0

Low-voltage industrial components (EG000017) / Switch disconnector (EC000216)

Electric engineering, automation, process control engineering / Low-voltage switch technology / Off-load switch, circuit breaker, control switch / Switch disconnector (ecl@ss8-27-37-14-03 [AKF060009])

Version as switch disconnector compact			Yes
Version as main switch			No
Version as maintenance-/service switch			No
Version as safety switch			No
Version as emergency stop installation			No
Max. rated operation voltage Ue AC		V	690
Rated permanent current Iu		A	63
Rated operation power AC-3, 400 V		kW	0
Rated operation power at AC-23, 400 V		kW	30
Conditioned rated short-circuit current Iq		kA	0
Number of poles			3
Number of auxiliary contacts as normally closed contact			0
Number of auxiliary contacts as normally open contact			0
Number of auxiliary contacts as change-over contact			0
Motor drive optional			No
Motor drive integrated			No
Voltage release optional			No
Device construction			Built-in device fixed built-in technique
Suitable for ground mounting			Yes
Suitable for front mounting			No
Suitable for front mounting center			No
Suitable for distribution board installation			Yes
Suitable for intermediate mounting			No
Type of control element			Toggle
Interlockable			No
Connection type main current circuit			Screw connection

Degree of protection (IP), front side			IP20

Dimensions

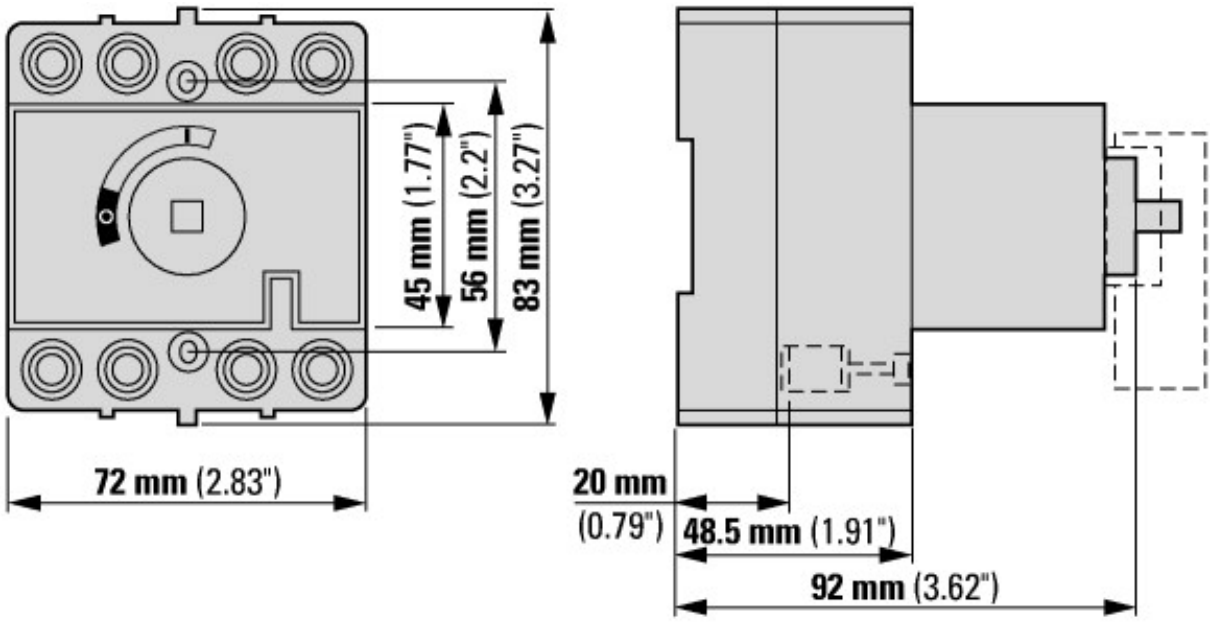

Additional product information (links)

Technical overview cam switch, switch-disconnector	http://de.ecat.moeller.net/flip-cat/?edition=HPLTEv1&startpage=4.2
System overview cam switch T	http://de.ecat.moeller.net/flip-cat/?edition=HPLTEv1&startpage=4.4
System overview switch-disconnector P	http://de.ecat.moeller.net/flip-cat/?edition=HPLTEv1&startpage=4.6
Key to part numbers Cam switch	http://de.ecat.moeller.net/flip-cat/?edition=HPLTEv1&startpage=4.8
Key to part numbers Switch-disconnector	http://de.ecat.moeller.net/flip-cat/?edition=HPLTEv1&startpage=4.8
Switches for ATEX Zone 22	http://www.coopercrouse-hinds.eu/en/products/10-ex-safety-and-main-current-switches.html

© 12/2014 by Eaton Industries GmbH