MOELLER

Type: **NZM3–XKV70**
Article No.: **100514**
Sales text **Connection extension 3–pole**



Ordering information			
Rated current	/<subscript>n</subscript>	A	630
For use with			
Motor rating AC–3 at 400 V 50/60 Hz			NZM3(–4), PN3(–4), N(S)3(–4)
Motor rating AC–3 at 400 V 50/60 Hz			Three– and four–pole
Terminal capacities			
Type of conductor			Copper cable lugs Aluminium cable lug
Terminal capacities		mm^2	2 × 300
AWG/kcmil		mm^2	2 × 500
Cu strip (number of segments × width × segment thickness)		mm^2	(2 ×) 10 × 50 × 1.0
Copper busbar width × thickness	Width	mm	(2 ×) 10 × 50

Note concerning the product

The following applies for the rated current: The values have been determined conform to IEC/EN 60947 (switchgear standard) and generally relate to the max. defined cross–sections and are intended for the purpose of orientation.

The engineering standards which apply in each case must be observed.

Product view

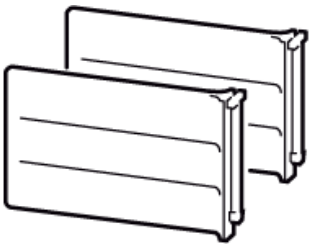

Notes concerning the product group

Type contains parts for a terminal located at top or bottom for3 or 4 pole circuit–breakers.

Central drill holes, e.g. for up to 2 cable lugs per phase.

Can be fitted to circuit–breaker with screw termination

Phase isolator supplied.

Distance between pole centres with NZM3(–4)–XKV70: 70 mm

Drill hole available for control cable.

Connection terminals NZM3(–4)–XK300 and NZM3(–4)–XK22X21 can be installed.

Note concerning the product

The following applies for the rated current: The values have been determined conform to IEC/EN 60947 (switchgear standard) and generally relate to the max. defined cross–sections and are intended for the purpose of orientation.

The engineering standards which apply in each case must be observed.

Dimensions

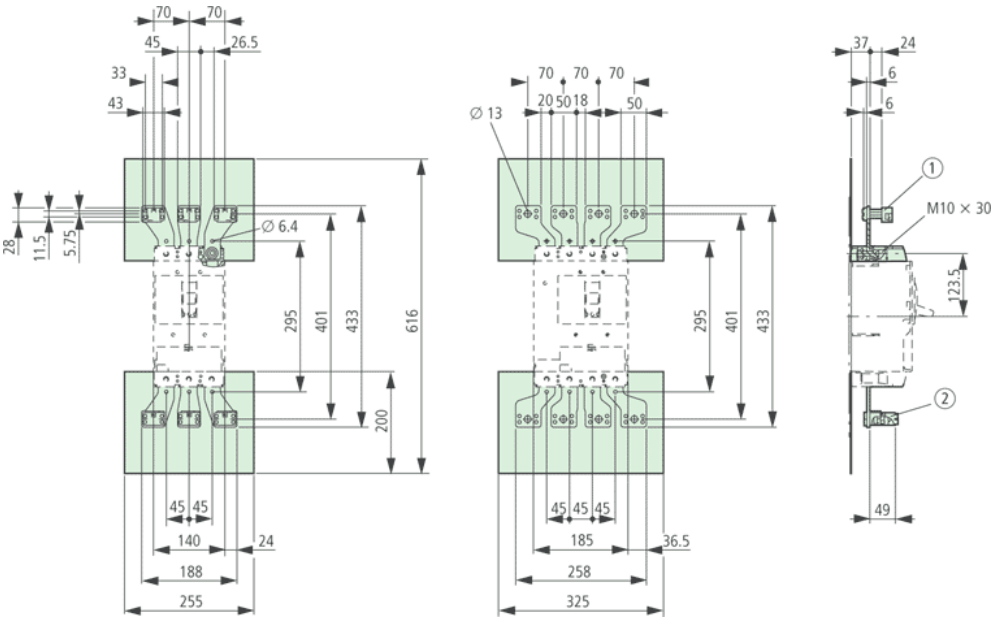

NZM3(−4)−XK22X21
NZM3(−4)−XK300
Length with phase isolators approx. 599 mm

Moeller GmbH, Hein−Moeller−Str. 7−11, D−53115 Bonn
E−Mail: catalog@moeller.net, Internet: www.moeller.net, http://catalog.moeller.net
HPL−C2007G V2.1 © 2007 by Moeller GmbH