

Series element, 12-240VAC/DC, for LED 12-30V

Part no. M22-XLED-T
Article no. 231079
Catalog No. M22-XLED-TQ

Powering Business Worldwide

Delivery programme

Product range			RMQ-Titan (drilling dimensions 22.5 mm)
Basic function			LED elements
Single unit/Complete unit			Single unit
Description			LED test elements
Function			for de-coupled function test (lamp test)
Connection technique			Screw terminals
Rated operational voltage	U_e	V	12 - 240 V AC/DC
Degree of Protection			IP20
Front ring			- N/A -
Connection to SmartWire-DT			no

Notes

For pushbutton actuators, indicator lights, illuminated pushbuttons and illuminated selector switch actuators, the following applies:

M22…-R only in combination with M22-LED…-R

M22…-G only in combination with M22-LED…-G

M22…-W only in combination with M22-LED…-W

M22…-Y only in combination with M22-LED…-W

M22…-B in combination with M22-LED…-W or M22-LED…-B

Approvals

Product Standards	IEC/EN 60947-5; UL 508; CSA-C22.2 No. 14-05; CSA-C22.2 No. 94-91; CE marking
UL File No.	E29184
UL Category Control No.	NKCR
CSA File No.	012528
CSA Class No.	3211-03
North America Certification	UL listed, CSA certified
Degree of Protection	UL/CSA Type: -

Data for design verification according to IEC/EN 61439

IEC/EN 61439 design verification	
10.2 Strength of materials and parts	
10.2.2 Corrosion resistance	Meets the product standard's requirements.
10.2.3.1 Verification of thermal stability of enclosures	Meets the product standard's requirements.
10.2.3.2 Verification of resistance of insulating materials to normal heat	Meets the product standard's requirements.
10.2.3.3 Verification of resistance of insulating materials to abnormal heat and fire due to internal electric effects	Meets the product standard's requirements.
10.2.4 Resistance to ultra-violet (UV) radiation	Meets the product standard's requirements.
10.2.5 Lifting	Does not apply, since the entire switchgear needs to be evaluated.
10.2.6 Mechanical impact	Does not apply, since the entire switchgear needs to be evaluated.
10.2.7 Inscriptions	Meets the product standard's requirements.
10.3 Degree of protection of ASSEMBLIES	Does not apply, since the entire switchgear needs to be evaluated.
10.4 Clearances and creepage distances	Meets the product standard's requirements.
10.5 Protection against electric shock	Does not apply, since the entire switchgear needs to be evaluated.
10.6 Incorporation of switching devices and components	Does not apply, since the entire switchgear needs to be evaluated.
10.7 Internal electrical circuits and connections	Is the panel builder's responsibility.
10.8 Connections for external conductors	Is the panel builder's responsibility.
10.9 Insulation properties	
10.9.2 Power-frequency electric strength	Is the panel builder's responsibility.
10.9.3 Impulse withstand voltage	Is the panel builder's responsibility.

10.9.4 Testing of enclosures made of insulating material		Is the panel builder's responsibility.
10.10 Temperature rise		The panel builder is responsible for the temperature rise calculation. Eaton will provide heat dissipation data for the devices.
10.11 Short-circuit rating		Is the panel builder's responsibility. The specifications for the switchgear must be observed.
10.12 Electromagnetic compatibility		Is the panel builder's responsibility. The specifications for the switchgear must be observed.
10.13 Mechanical function		The device meets the requirements, provided the information in the instruction leaflet (IL) is observed.

Technical data ETIM 5.0

Low-voltage industrial components (EG000017) / Accessories for control circuit devices (EC002024)		
Electric engineering, automation, process control engineering / Low-voltage switch technology / Low-voltage switch technology (accessories) / Control circuit devices (accessories) (ecl@ss8-27-37-92-16 [ACO043007])		
Type of electrical accessory		Resistor block
Type of mechanical accessory		-

Dimensions

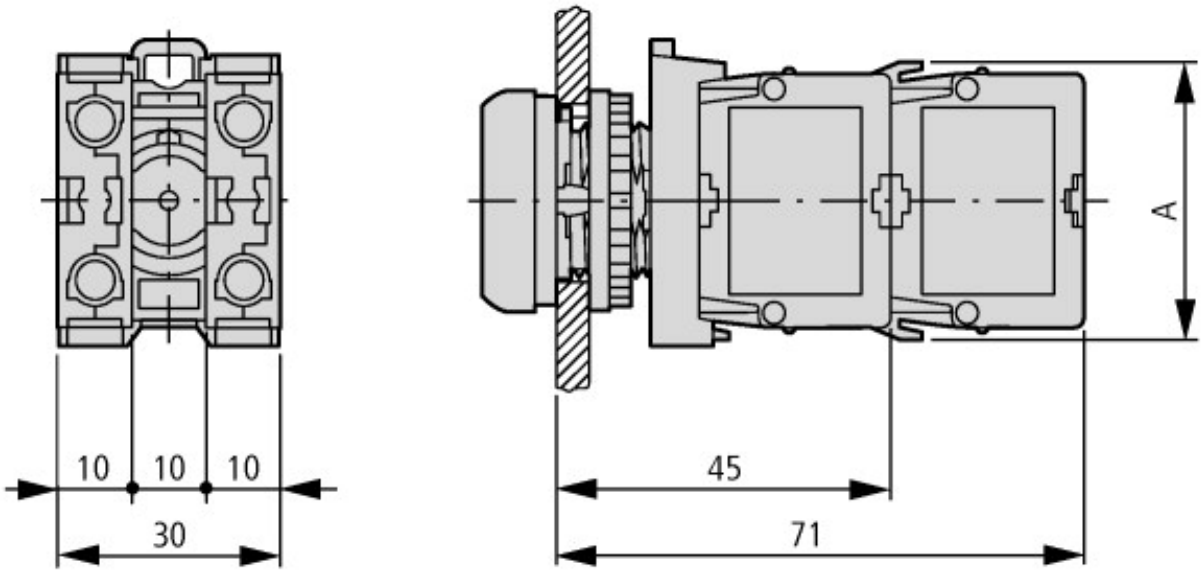

Pushbutton with M22-(C)K…
Pushbutton with M22-(C) LED… + M22-XLED…

Additional product information (links)

IL04716009Z (AWA1160-1747) Series element RMQ-Titan	
IL04716009Z (AWA1160-1747) Series element RMQ-Titan	ftp://ftp.moeller.net/DOCUMENTATION/AWA_INSTRUCTIONS/IL04716009Z2011_02.pdf

© 10/2014 by Eaton Industries GmbH