

Contactor for 3ph three-phase capacitors, 50kVAR

Part no. DILK50-10(400V50HZ,440V60HZ)
Article no. 294078
Catalog No. XTCC050D10N

Powering Business Worldwide

Delivery programme

Product range			DILK Contactors for capacitors
Application			Contactors for power factor correction
Three-phase capacitors 50 - 60 Hz			
Open			
230 V		kVAr	25
400 V		kVAr	50
525 V		kVAr	65
690 V		kVAr	85
Contact sequence			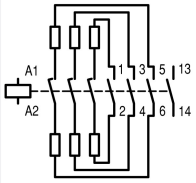
Actuating voltage			400 V 50 Hz, 440 V 60 Hz

Technical data

General

Standards			IEC/EN 60947
Ambient temperature		°C	
Open		°C	- 25 - 60
Enclosed		°C	- 25 - 40
Mounting position			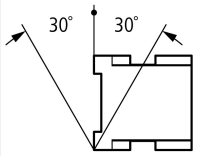
Degree of Protection			IP00
Protection against direct contact when actuated from front (EN 50274)			Finger and back-of-hand proof
Weight basic unit			
AC operated		kg	1
Terminal capacity main cable			
Solid		mm^2	1 x (2.5 - 16)
Flexible with ferrule		mm^2	1 x (2.5 - 35)
Stranded		mm^2	1 x (16 - 50)
Solid or stranded		AWG	12 - 2
Flat conductor	Lamellenzahl x Breite x Dicke	mm	1 x (6 x 9 x 0.8)

Rated power of three-phase capacitors			
230 V		kVAr	25
400 V		kVAr	50
525 V		kVAr	65
690 V		kVAr	85
Rated operational current I_e of three-phase capacitors			
Open			
230 V	I_e	A	72

400 V	I_e	A	72
525 V	I_e	A	72
690 V	I_e	A	72
of three-phase capacitors enclosed	I_e		
230 V	I_e	A	65
400 V	I_e	A	65
525 V	I_e	A	65
690 V	I_e	A	65
Making capacity (i-peak value) without damping		x I_e	180
Component lifespan	Operations	x 10^6	0.15
Maximum operating frequency		Ops./h	
Max. operating frequency		Ops/h	120

Magnet systems

Voltage tolerance		x U_c	
AC operated	Pick-up	x U_c	0.8 - 1.15
Drop-out voltage AC operated	Drop-out	x U_c	0.3 - 0.6
Power consumption of the coil in a cold state and 1.0 x U_c			
50 Hz	Pick-up	VA	45
50 Hz	Sealing	VA	1.5
50 Hz	Sealing	W	1.5
60 Hz	Pick-up	VA	45
60 Hz	Sealing	VA	1.5
60 Hz	Sealing	W	1.5
50/60 Hz	Pick-up	VA	45 45
50/60 Hz	Sealing	VA	1.5 1.5
50/60 Hz	Sealing	W	1.5
Duty factor		% DF	100
Switching times at 100 % U_c (approximate values)			
Main contacts			
AC operated			
Closing delay		ms	
Switching times of main contacts AC operated Closing delay, min.		ms	50
Opening delay		ms	
Switching times of main contacts AC operated Opening delay, min.		ms	40
Arcing time		ms	10

Electromagnetic compatibility (EMC)

Emitted interference			according to EN 60947-1
Interference immunity			according to EN 60947-1

Additional technical data

like the contactar	DIL		M65

Data for design verification according to IEC/EN 61439

Technical data for design verification			
Equipment heat dissipation, current-dependent	P_{vid}	W	0
Static heat dissipation, non-current-dependent	P_{vs}	W	1.5
Heat dissipation capacity	P_{diss}	W	0
IEC/EN 61439 design verification			
10.2 Strength of materials and parts			
10.2.2 Corrosion resistance			Meets the product standard's requirements.
10.2.3.1 Verification of thermal stability of enclosures			Meets the product standard's requirements.
10.2.3.2 Verification of resistance of insulating materials to normal heat			Meets the product standard's requirements.
10.2.3.3 Verification of resistance of insulating materials to abnormal heat and fire due to internal electric effects			Meets the product standard's requirements.
10.2.4 Resistance to ultra-violet (UV) radiation			Meets the product standard's requirements.

10.2.5 Lifting			Does not apply, since the entire switchgear needs to be evaluated.
10.2.6 Mechanical impact			Does not apply, since the entire switchgear needs to be evaluated.
10.2.7 Inscriptions			Meets the product standard's requirements.
10.3 Degree of protection of ASSEMBLIES			Does not apply, since the entire switchgear needs to be evaluated.
10.4 Clearances and creepage distances			Meets the product standard's requirements.
10.5 Protection against electric shock			Does not apply, since the entire switchgear needs to be evaluated.
10.6 Incorporation of switching devices and components			Does not apply, since the entire switchgear needs to be evaluated.
10.7 Internal electrical circuits and connections			Is the panel builder's responsibility.
10.8 Connections for external conductors			Is the panel builder's responsibility.
10.9 Insulation properties			
10.9.2 Power-frequency electric strength			Is the panel builder's responsibility.
10.9.3 Impulse withstand voltage			Is the panel builder's responsibility.
10.9.4 Testing of enclosures made of insulating material			Is the panel builder's responsibility.
10.10 Temperature rise			The panel builder is responsible for the temperature rise calculation. Eaton will provide heat dissipation data for the devices.
10.11 Short-circuit rating			Is the panel builder's responsibility. The specifications for the switchgear must be observed.
10.12 Electromagnetic compatibility			Is the panel builder's responsibility. The specifications for the switchgear must be observed.
10.13 Mechanical function			The device meets the requirements, provided the information in the instruction leaflet (IL) is observed.

Technical data ETIM 5.0

Low-voltage industrial components (EG000017) / Capacitor magnet contactor (EC001079)			
Electric engineering, automation, process control engineering / Low-voltage switch technology / Contactor (LV) / Capacitor contactor (ecl@ss8-27-37-10-06 [AGZ569011])			
Rated control supply voltage Us at AC 50HZ		V	400 - 400
Rated control supply voltage Us at AC 60HZ		V	440 - 440
Rated control supply voltage Us at DC		V	0 - 0
Voltage type for actuating			AC
Number of auxiliary contacts as normally open contact			1
Number of auxiliary contacts as normally closed contact			0
Connection type main current circuit			Screw connection
Number of main contacts as normally open contact			3
Number of normally closed contacts as main contact			0
Rated blind power at 400 V, 50 Hz		kvar	50

Approvals

Product Standards			IEC/EN 60947-4-1; UL 508; CSA-C22.2 No. 14-05; CE marking
UL File No.			E29096
UL Category Control No.			NLDX
CSA File No.			012528
CSA Class No.			3211-04
North America Certification			UL listed, CSA certified
Specially designed for North America			No

Dimensions

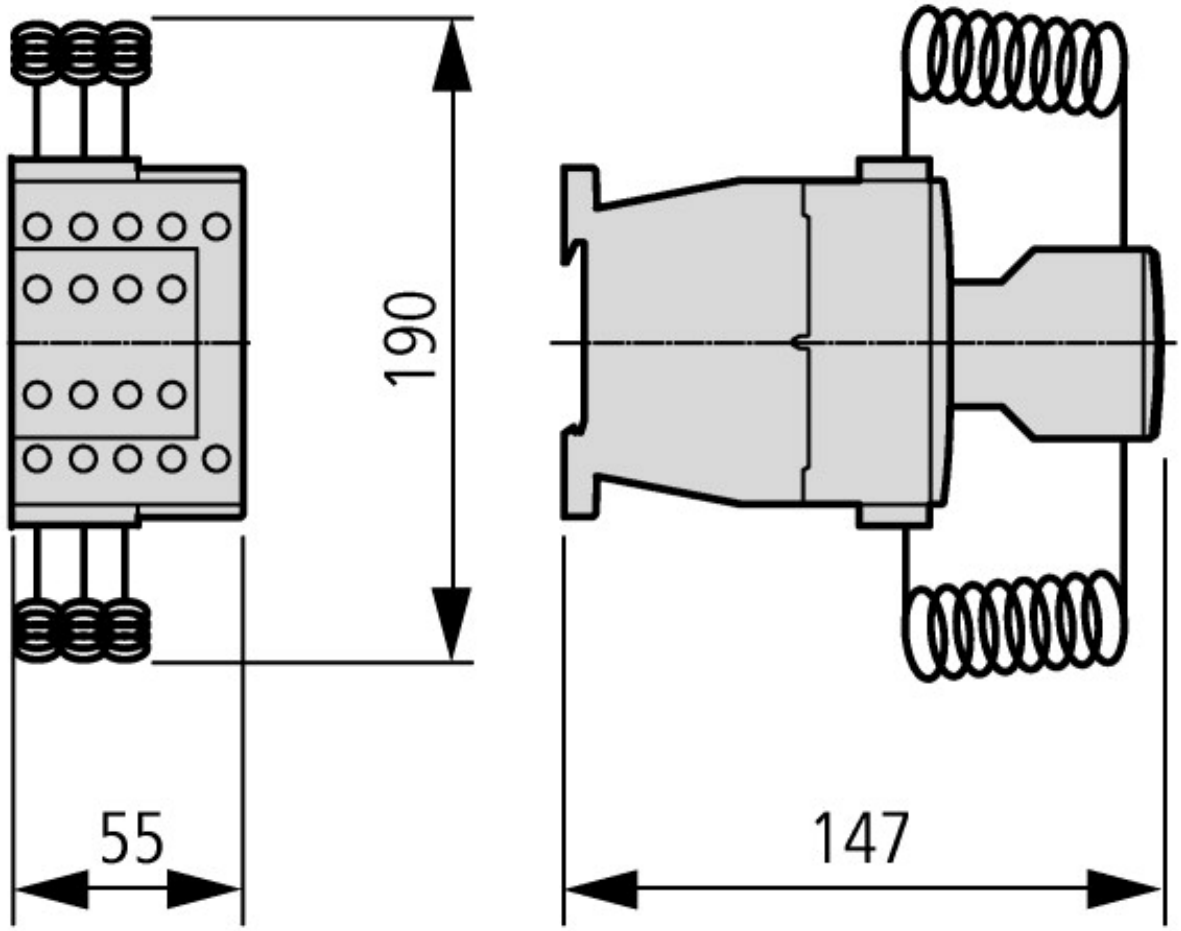

Contactors for capacitors with series resistors

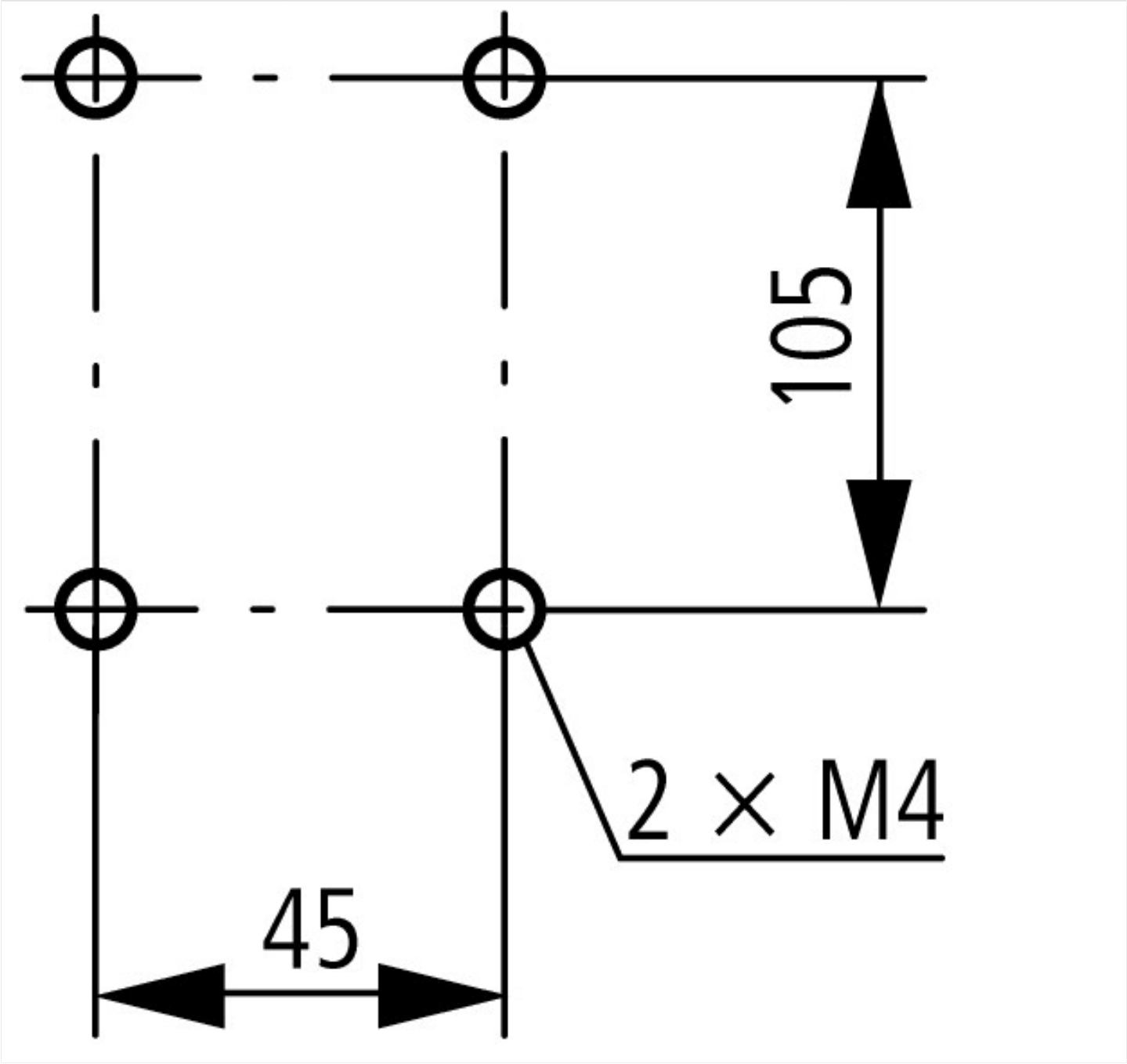

Additional product information (links)

IL03407038Z (AWA2100-2272) Contactor for capacitors	
IL03407038Z (AWA2100-2272) Contactor for capacitors	ftp://ftp.moeller.net/DOCUMENTATION/AWA_INSTRUCTIONS/IL03407038Z2010_10.pdf
UL/CSA: UL/CSA: Special Purpose Rating	http://de.ecat.moeller.net/flip-cat/?edition=HPLTE&startpage=5.85

© 12/2014 by Eaton Industries GmbH