

**Insulated Terminal**

**Part no.** **K50/1**

**Article no.** **098573**

Powering Business Worldwide™

## Delivery programme

| | | | |
|---|---|---|---|
| Accessories | | | Insulated individual terminals 32 - 100 A |
| Description | | | New version: Replaces previous individual terminals K10/1, K25/1, K50/1.<br>Finger-proof on all sides<br>For snap-fitting on mounting rail to IEC/EN 60715<br>Can be screwed onto mounting plates and directly on CI/CI-K enclosure stacking mandrels<br>Can be grouped with additional K50/1 terminals<br>With L, N, and protective conductor markings |
| Circuit | | | 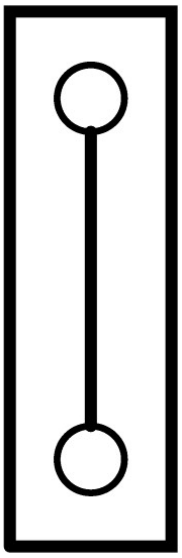 |
| For use with | | | CI<br>CI-K<br>T cam switch<br>P switch-disconnectors<br>NZM Circuit-Breakers<br>CU-BAND3X9x0.8-BK |

## General

| | | | |
|---|---|---|---|
| Standards | | | VDE approval in accordance with DIN EN 60947-7-1<br>The product complies with the EC's RoHS Directives |
| Colour | | | |
| | | | RAL 7035 light grey |
| Material | | | |
| Material | | | Terminal body: Brass (CuZn39Pb2), bare<br>Enclosure: PA 6 (halogen-free)<br>Screws: Steel, Zn, thick-film passivated |
| Flame retardant | | | self-extinguishing |
| mechanical values | | | Stripping length 50 $mm^2$, 16 mm<br>Screw heads internal hex, 5 mm |

## Electrical data

| | | | |
|---|---|---|---|
| Rated uninterrupted current | $I_u$ | A | 150 |
| Rated operational voltage | $U_e$ | V | 690 |

| | | | |
|---|---|---|---|
| Terminal capacity | | $mm^2$ | 2 x 50 $mm^2$<br>Solid Cu round conductor, 1.5-·-50·$mm^2$<br>Stranded Cu round conductor, 1.5 - 50 $mm^2$<br>Flexible Cu round conductor, flexible with ferrule, 1.5-·-35·$mm^2$<br>Cu ribbon cable, 3 x 9 x 0.8 mm |
| Note for table header | | | ○ solid<br>stranded<br>flexible with ferrule<br>Flat cable |

## Dimensions

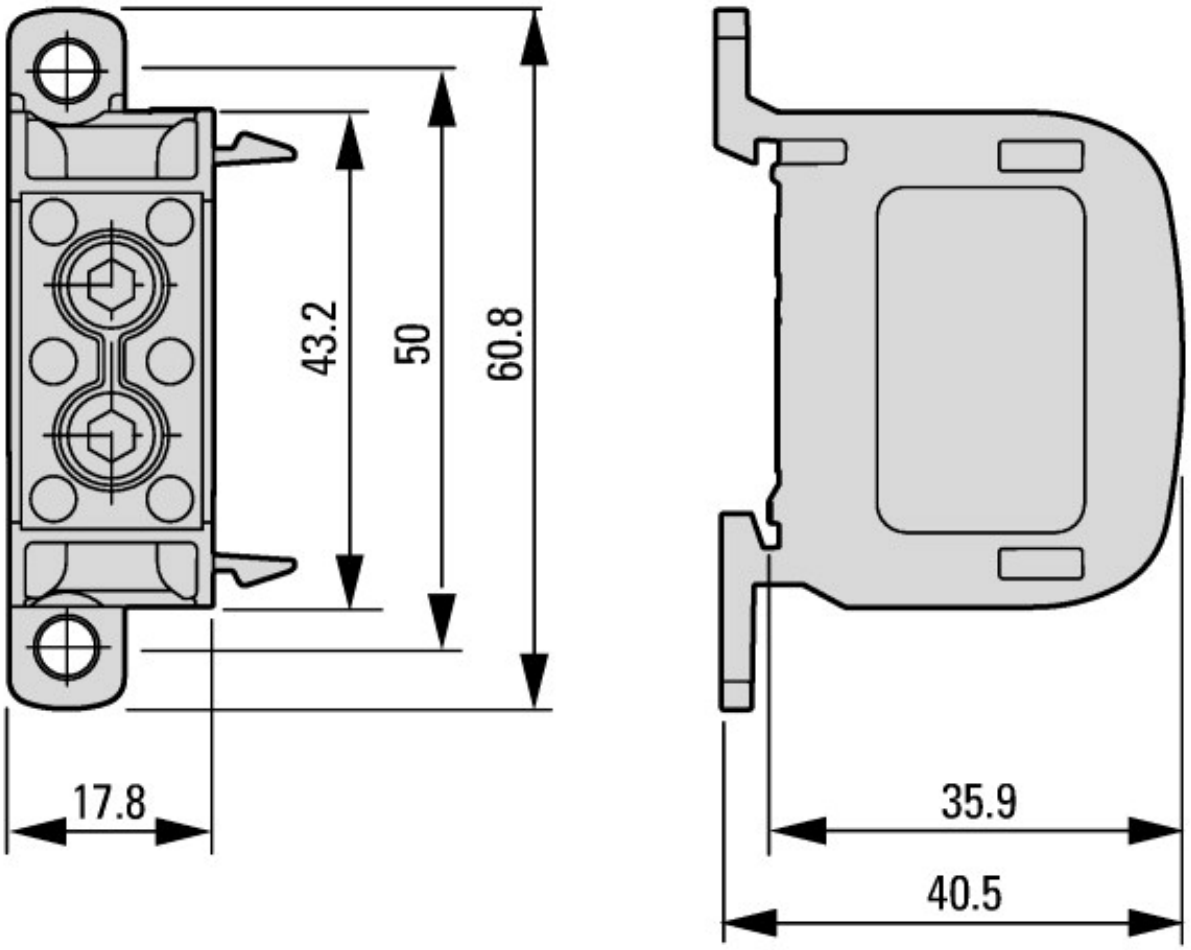



© 11/2012 by Eaton Industries GmbH