Product data sheet
Characteristics

HMISCU8B5
5”7 color touch controller panel - Dig 8 inputs/8 outputs +Ana 4 In/2 Out



Main

Range of product	Magelis SCU
Product or component type	Small touch HMI controller
Display size	5.7 inch
Display type	Backlit LED colour TFT LCD
Pixel resolution	320 x 240 pixels QVGA
Touch panel	Analogue

Complementary

Backlight lifespan	Lifespan: 50000 hours with 65000 colours
Brightness	16 levels via touch panel
View angle horiz x vert	60° bottom 40° top 60° right 60° left
Character font	ASCII Chinese (simplified Chinese) Japanese (ANK, Kanji) Korean Taiwanese (traditional Chinese)
Supply	External source
[Us] rated supply voltage	24 V at 20.4...28.8 V DC
Immunity to microbreaks	<= 10 ms
Inrush current	<= 30 A
Power consumption	24 W
Local signalling	No indicator
Number of pages	Limited by internal memory capacity
Software designation	SoMachine
Operating system	Magelis
Processor name	CPU RISC
Processor frequency	333 MHz
Memory description	128 MB application run memory, type: DRAM 128 kB internal data storage memory, type: FRAM 128 MB flash memory, type: NAND
Integrated connection type	CANopen master bus, connector type: SUB-D 9 1 USB (V2.0) port, connector type: USB A 1 USB (V2.0) port, connector type: mini B USB 1 serial link, communication ports RS485/RS232, connector type: RJ45, transmission rate: <= 115.2 kbits/s 1 Ethernet TCP/IP, connector type: RJ45
Realtime clock	Built-in
Downloadable protocols	Modbus Modbus TCP/IP Third party protocols Uni-TE CANopen
Fixing mode	By 1 nut - diameter: Ø 22 mm, mounting on: 1...6 mm thick panel
Enclosure material	PC/PBT and PAA
Shock resistance	294 m/s² (duration=6 ms) conforming to IEC 60068-2-27 on panel mounting 147 m/s² (duration=11 ms) conforming to IEC 60068-2-27 on DIN rail

The information provided in this documentation contains general descriptions and/or technical characteristics of the performance of the products contained herein.
This documentation is not intended as a substitute for and is not to be used for determining suitability or reliability of these products for specific user applications.
It is the duty of any such user or integrator to perform the appropriate and complete risk analysis, evaluation and testing of the products with respect to the relevant specific application or use thereof.
Neither Schneider Electric Industries SAS nor any of its affiliates or subsidiaries shall be responsible or liable for misuse of the information contained herein.

Vibration resistance	1 gn (f=9...150 Hz) conforming to IEC 60068-2-6 +/- 3.5 mm (f=5...9 Hz) conforming to IEC 60068-2-6
Electromagnetic compatibility	Radiated emission - test level: 30 MHz...1 GHz conforming to EN 55011 Conducted emission - test level: 150 kHz...30 MHz conforming to EN 55011 Conducted RF disturbances - test level: 10 V, 0.15...80 MHz conforming to IEC 61000-4-6 Surge immunity test - test level: 0.5 kV differential mode, digital I/O conforming to IEC 61000-4-5 Surge immunity test - test level: 1 kV common mode, digital I/O conforming to IEC 61000-4-5 Surge immunity test - test level: 1 kV, power supply (differential mode) conforming to IEC 61000-4-5 Surge immunity test - test level: 2 kV, power supply (common mode) conforming to IEC 61000-4-5 Electrical fast transient/burst immunity test - test level: 1 kV, CAN line conforming to IEC 61000-4-4 Electrical fast transient/burst immunity test - test level: 1 kV, COM line conforming to IEC 61000-4-4 Electrical fast transient/burst immunity test - test level: 1 kV, Ethernet line conforming to IEC 61000-4-4 Electrical fast transient/burst immunity test - test level: 2 kV, relay wires conforming to IEC 61000-4-4 Electrical fast transient/burst immunity test - test level: 1 kV, between analogue I/O and operating voltage conforming to IEC 61000-4-4 Electrical fast transient/burst immunity test - test level: 2 kV, power lines conforming to IEC 61000-4-4 Susceptibility to electromagnetic fields - test level: 10 V/m, 80 MHz...3 GHz conforming to IEC 61000-4-3 Electrostatic discharge immunity test - test level: 6 kV, contact discharge conforming to IEC 61000-4-2 Electrostatic discharge immunity test - test level: 8 kV, air discharge conforming to IEC 61000-4-2
Discrete input number	6 for digital input conforming to IEC 61131-2 Type 1 2 for fast input (normal mode) conforming to IEC 61131-2 Type 1
Discrete input voltage	24 V DC discrete input logic:sink or source (positive/negative)
Number of common point	1 for digital input 1 for fast input (HSC mode)
Discrete input current	5 mA for digital 7.83 mA for fast input
Input impedance	4.7 kOhm 2.81 kOhm
Sensor power supply	15...28.8 V DC, voltage (state 1): >= 15 V, current (state 1): >= 2.5 mA, voltage (state 0): <= 5 V, current (state 0): <= 1 mA 15...28.8 V DC, voltage (state 1): >= 15 V, current (state 1): >= 5 mA, voltage (state 0): <= 5 V, current (state 0): <= 1.5 mA
Configurable filtering time	3...12 ms integrator (none/run/stop) 0.004...0.04 ms bounce filter (latch/event and cumulative filter by step Nx0.5ms (64>=N>=2)) 0 ms no filter (none)
Input frequency	100 kHz for fast input - control type pulse/direction 100 kHz for fast input - control type single phase 100 kHz for fast input (encoder mode) - control type A/B
Cable length	50 m unshielded cable for digital input 100 m shielded cable for digital input 10 m shielded cable for fast input
Connection pitch	3.5 mm
Overvoltage protection	With
Isolation between channels and internal logic	500 V DC
Isolation between channels	None
Discrete output number	6 digital output, output logic: source 2 fast output (normal mode), output logic: source
Discrete output voltage	220 V AC (voltage limit: 100...250 V) with relay discrete output(s) 24 V DC (voltage limit: 5...30 V) with relay discrete output(s) 24 V DC (voltage limit: 19.2...28.8 V) with transistor discrete output(s)
Input/Output number	6 for digital output, terminal(s): DQ0...DQ5 6 for digital input, terminal(s): DI0...DI5 2 for fast output, terminal(s): FQ0...FQ1 2 for fast input, terminal(s): FI0...FI1

Discrete output current	2 A (current per output common:4 A), response time 2 ms with closing contact for digital output 2 A (current per output common:4 A), response time 5 ms with opening contact for digital output 50 mA, response time 2 ms for fast output (PWM or PTO mode) 300 mA, response time 2 ms for fast output (normal mode)
Insulation resistance	> 10 MOhm between power supply and earth > 10 MOhm between the I/O and internal logic
Output frequency	<= 1 kHz for fast output (PWM mode) <= 100 kHz for fast output (PTO mode)
Absolute accuracy error	+/- 15 % of full scale of cyclic ratio 30...70% for fast output (PWM or PTO mode) +/- 10 % of full scale of cyclic ratio 20...80% for fast output (PWM or PTO mode) +/- 5 % of full scale of cyclic ratio 10...90% for fast output (PWM or PTO mode) 1 % of full scale of cyclic ratio 1...99% for fast output (PWM or PTO mode) +/- 0.1 % of full scale of cyclic ratio 1...99% for fast output (PWM or PTO mode)
Analogue input number	2 for RTDs 2 for analog input
Analogue input range	-10...+10 V or 0...10 V - resolution: 12 bits + sign, input impedance: >= 1 MOhm 0...20 mA/4...20 mA - resolution: 12 bits, input impedance: 250 Ohm (tolerance: +/- 1 %)
Analogue input type	RTD at - 200...1300 °C - resolution: 16 bits (thermocouple N) RTD at - 200...900 °C - resolution: 16 bits (thermocouple E) RTD at - 200...400 °C - resolution: 16 bits (thermocouple T) RTD at 0...1600 °C - resolution: 16 bits (thermocouple S) RTD at 200...1800 °C - resolution: 16 bits (thermocouple B) RTD at 0...1600 °C - resolution: 16 bits (thermocouple R) RTD at - 240...1370 °C - resolution: 16 bits (thermocouple K) RTD at - 200...760 °C - resolution: 16 bits (thermocouple J) RTD at - 50...200 °C - resolution: 16 bits temperature probe: Ni 100/Ni 1000 RTD at - 200...600 °C - resolution: 16 bits temperature probe: Pt 100/Pt 1000
Analogue output number	2 resistive load for 12 bits + sign
Analogue output range	-10...10 V/0...10 V (> 2 kOhm) for short-circuit 0...20 mA/4...20 mA (> 300 Ohm) for open-circuit
Height	129.4 mm
Width	163 mm
Depth	76.22 mm
Product weight	0.803 kg

Environment

Standards	EN 61131-2 FCC Class A IEC 61000-6-2 RoHS compliant UL 508 ANSI/ISA 12-12-01 WEEE directive 2002/96/EC CSA C22.2 No 213 Class I Division 2 RoHS China SJ/T 11363-2006
Product certifications	C-Tick CULus 508 GOST CUL 1604 Class 1 Division 2 KCC CULus CSA 22-2 No 142
Marking	CE
Ambient air temperature for operation	0...50 °C
Ambient air temperature for storage	-20...60 °C
Relative humidity	5...85 % without condensation
Operating altitude	<= 2000 m
Storage altitude	<= 10000 m
Maximum pressure	800...1114 hPa
IP degree of protection	IP65 for front panel conforming to IEC 60529 IP20 for rear panel conforming to IEC 60529
NEMA degree of protection	NEMA 4X for front panel
Pollution degree	2 conforming to IEC 60664
Environmental characteristic	Corrosive gas free

HMISCU8B5

Dimensions

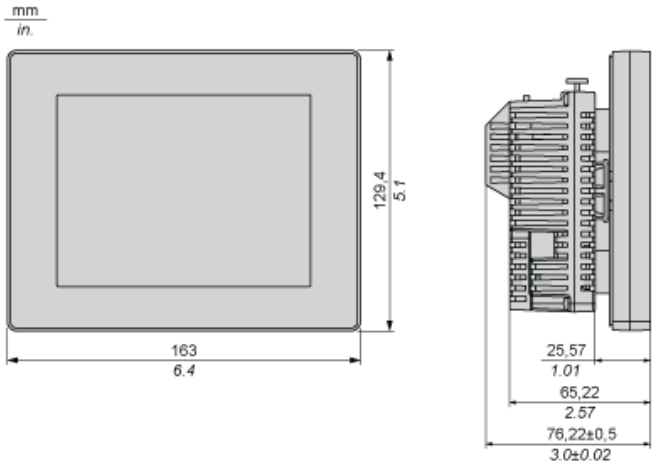

Recommended Mounting position

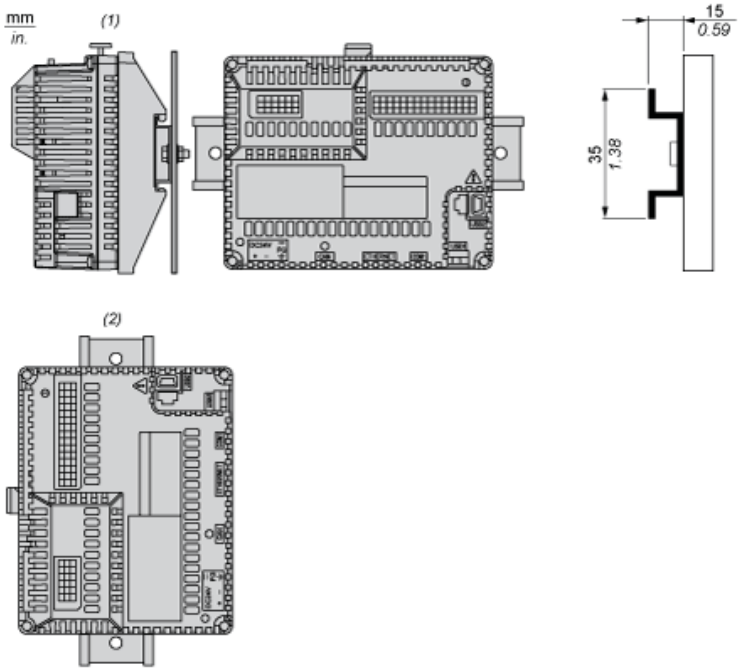

(1) Horizontal mounting
(2) Vertical mounting

No Recommended Mounting Position

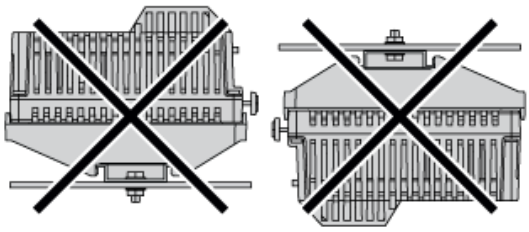

Clearance

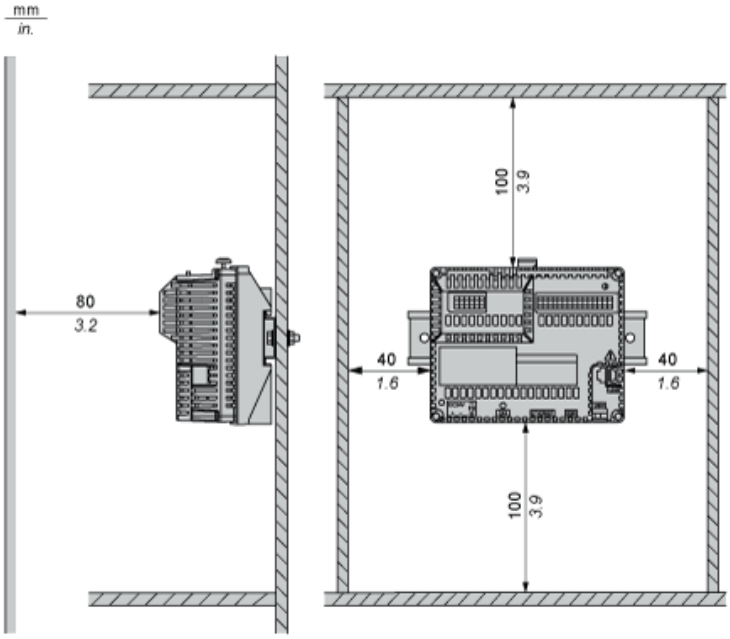

Keep adequate spacing for proper ventilation to maintain an ambient temperature between 0...50 °C (32...122 °F) for horizontal installation and 0...40 °C (32...104 °F) for vertical installation.

Wiring Diagram

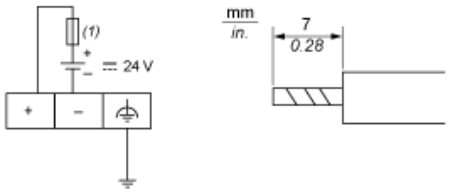

(1) Slow-blow 2A type T fuse

Wiring Diagram of the Analog Inputs and Analog Outputs

Voltage for Analog Inputs

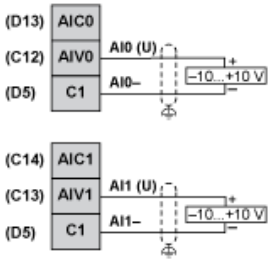

Current for Analog Inputs

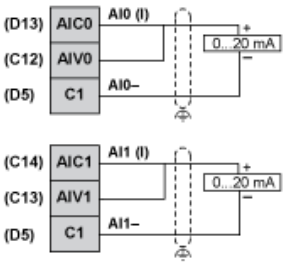

Voltage and Current for Analog Outputs

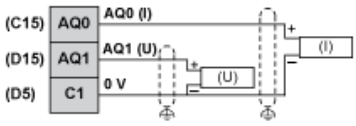

3 Wiring for Analog Inputs PT100

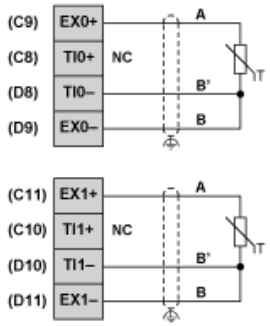

2 Wiring for Analog Inputs PT100

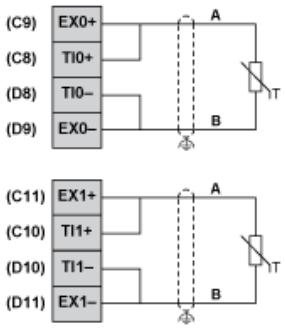

Thermocouple

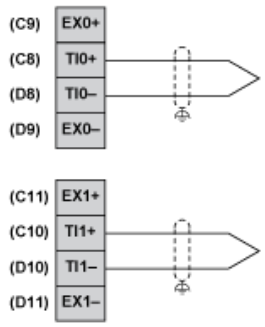

Wiring Diagram of Digital Inputs

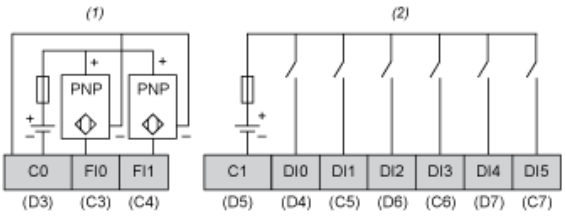

(1) HSC inputs with pin assignment of terminal blocks C,D.
(2) Digital inputs with pin assignment of terminal blocks C,D.

Wiring Diagram of Digital Outputs

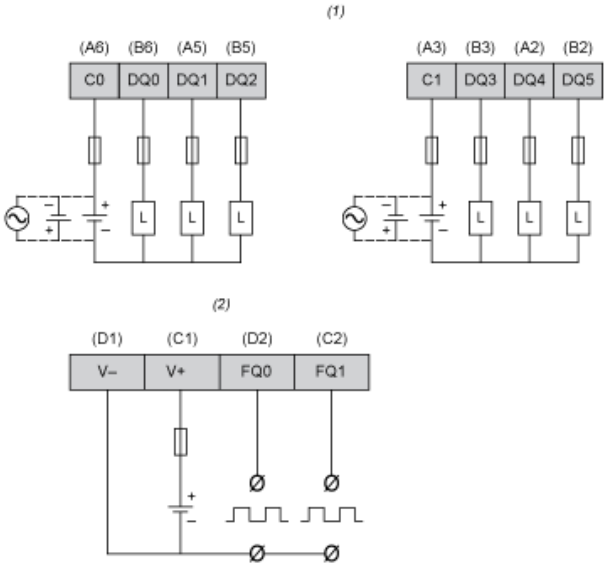

(1) Digital outputs with pin assignment of terminal blocks A,B.
(2) PWM outputs with pin assignment of terminal blocks C,D.