Product data sheet
Characteristics

TM241C24T
controller M241 24 IO transistor PNP



Main

Range of product	Modicon M241
Product or component type	Logic controller
Discrete input number	14 discrete input including 8 fast input conforming to IEC 61131-2 Type 1
Discrete output type	Transistor
Discrete output number	10 transistor including 4 fast output
Discrete output voltage	24 V DC for transistor output
Discrete output current	0.1 A with Q0...Q3 terminal(s) for fast output (PTO mode) 0.5 A with Q0...Q9 terminal(s) for transistor output
[Us] rated supply voltage	24 V DC

Complementary

Discrete I/O number	24
Discrete input logic	Sink or source
Discrete input voltage	24 V
Discrete input voltage type	DC
Voltage state1 guaranteed	>= 15 V for input
Current state 1 guaranteed	>= 5 mA for fast input >= 2.5 mA for input
Voltage state 0 guaranteed	<= 5 V for input
Current state 0 guaranteed	<= 1.5 mA for fast input <= 1 mA for input
Discrete input current	10.7 mA for fast input 5 mA for input
Input impedance	2.81 kOhm for fast input 4.7 kOhm for input
Response time	<= 2 µs turn-off operation with Q0...Q3 terminal(s) for fast output <= 2 µs turn-on operation with Q0...Q3 terminal(s) for fast output <= 250 µs turn-off operation with Q0...Q9 terminal(s) for output <= 34 µs turn-on operation with Q0...Q9 terminal(s) for output <= 2 µs turn-off operation with I0...I7 terminal(s) for fast input <= 2 µs turn-on operation with I0...I7 terminal(s) for fast input 50 µs turn-off operation with I0...I13 terminal(s) for input 50 µs turn-on operation with I0...I13 terminal(s) for input
Configurable filtering time	12 ms for input 4 ms for input 1 ms for input 0 ms for input 12 ms for fast input 1 µs for fast input
Number of I/O expansion module	14 (remote I/O architecture) 7 (local I/O architecture)
Discrete output logic	Positive logic (source)
Output voltage limits	30 V DC
Output frequency	<= 1 kHz for output <= 100 kHz for fast output (PLS mode) <= 20 kHz for fast output (PWM mode)
Accuracy	+/- 1 % at 100 Hz...1 kHz for fast output +/- 0.1 % at 20...100 Hz for fast output
Leakage current	<= 5 µA for output
Voltage drop	<= 1 V

The information provided in this documentation contains general descriptions and/or technical characteristics of the performance of the products contained herein.
This documentation is not intended as a substitute for and is not to be used for determining suitability or reliability of these products for specific user applications.
It is the duty of any such user or integrator to perform the appropriate and complete risk analysis, evaluation and testing of the products with respect to the relevant specific application or use thereof.
Neither Schneider Electric Industries SAS nor any of its affiliates or subsidiaries shall be responsible or liable for misuse of the information contained herein.

Tungsten load	<= 2.4 W
Protection type	Reverse polarity protection for fast output Short-circuit and overload protection with automatic reset Short-circuit protection
Reset time	12 s fast output 10 ms output
Current per output common	1 A with Q8...Q9 terminal for output 2 A with Q4...Q7 terminal for output 2 A with Q0...Q3 terminal for fast output
Execution time for 1 KInstruction	0.7 ms for other instruction 0.3 ms for event and periodic task
Memory capacity	64 MB for system memory RAM 8 MB for program
Data backed up	128 MB built-in flash memory for backup of user programs
Data storage equipment	<= 32 GB SD card optional
Battery type	BR2032 lithium non-rechargeable, battery life: 4 yr
Backup time	2 years at 25 °C
Application structure	8 event tasks 4 cyclic master tasks 3 cyclic master tasks + 1 freewheeling task 8 external event tasks
Realtime clock	With
Clock drift	<= 60 s/month at 25 °C
Positioning functions	PWM/PTO function 4 channel(s) (positioning frequency: 100 kHz)
Control signal type	Single phase signal at 200 kHz for fast input (HSC mode) Pulse/Direction signal at 200 kHz for fast input (HSC mode) A/B signal at 100 kHz for fast input (HSC mode)
Counting input number	4 fast input (HSC mode)
Integrated connection type	USB port with connector mini B USB 2.0 Non isolated serial link "serial 2" with connector removable screw terminal block and interface RS485 Non isolated serial link "serial 1" with connector RJ45 and interface RS232/ RS485
Supply	Serial link supply "serial 1" at 5 V, 200 mA
Transmission rate	480 Mbit/s for bus length of 3 m - communication protocol: USB 1.2...115.2 kbit/s (115.2 kbit/s by default) for bus length of 3 m - communication protocol: RS232 1.2...115.2 kbit/s (115.2 kbit/s by default) for bus length of 15 m - communication protocol: RS485
Communication port protocol	Modbus non isolated serial link with master/slave method
Supply voltage limits	20.4...28.8 V
Inrush current	<= 50 A
Power consumption in W	32.6...40.4 W
Cable length	<= 3 m shielded cable for fast output <= 50 m unshielded cable for output <= 10 m shielded cable for fast input <= 50 m unshielded cable for input
Local signalling	1 LED per channel green for I/O state 1 LED red for bus fault on TM4 (TM4) 1 LED green for SL2 1 LED green for SL1 1 LED red for BAT 1 LED green for SD card access (SD) 1 LED red for I/O error (I/O) 1 LED red for module error (ERR) 1 LED green for RUN 1 LED green for PWR
Electrical connection	Removable screw terminal block for connecting the 24 V DC power supply (pitch 5.08 mm) Removable screw terminal block for inputs and outputs (pitch 5.08 mm)
Insulation	500 V AC between fast output and internal logic Non-insulated between outputs 500 V AC between output and internal logic 500 V AC between fast input and internal logic Non-insulated between inputs 500 V AC between input and internal logic Non-insulated between supply and ground 500 V AC between supply and internal logic

Marking	CE
Surge withstand	1 kV for transistor output in common mode conforming to EN/IEC 61000-4-5 1 kV for input in common mode conforming to EN/IEC 61000-4-5 1 kV for relay output in differential mode conforming to EN/IEC 61000-4-5 0.5 kV for power lines (DC) in differential mode conforming to EN/IEC 61000-4-5 1 kV for shielded cable in common mode conforming to EN/IEC 61000-4-5 1 kV for power lines (DC) in common mode conforming to EN/IEC 61000-4-5
Mounting support	Plate or panel with fixing kit Top hat type TH35-7.5 rail conforming to IEC 60715 Top hat type TH35-15 rail conforming to IEC 60715
Height	90 mm
Depth	95 mm
Width	150 mm
Product weight	0.53 kg

Environment

Standards	CSA C22.2 No 142 UL 1604 UL 508 ANSI/ISA 12-12-01 CSA C22.2 No 213 EN/IEC 61131-2 : 2007 Marine specification (LR, ABS, DNV, GL)
Product certifications	CSA CULus IACS E10 RCM
Resistance to electrostatic discharge	4 kV on contact conforming to EN/IEC 61000-4-2 8 kV in air conforming to EN/IEC 61000-4-2
Resistance to electromagnetic fields	1 V/m (2 GHz...3 GHz) conforming to EN/IEC 61000-4-3 3 V/m (1.4 GHz...2 GHz) conforming to EN/IEC 61000-4-3 10 V/m (80 MHz...1 GHz) conforming to EN/IEC 61000-4-3
Resistance to fast transients	1 kV for transistor output conforming to EN/IEC 61000-4-4 1 kV for input conforming to EN/IEC 61000-4-4 1 kV for serial link conforming to EN/IEC 61000-4-4 2 kV for power lines conforming to EN/IEC 61000-4-4
Resistance to conducted disturbances, induced by radio frequency fields	10 V (spot frequency (2, 3, 4, 6.2, 8.2, 12.6, 16.5, 18.8, 22, 25 MHz)) conforming to Marine specification (LR, ABS, DNV, GL) 3 V (0.1...80 MHz) conforming to Marine specification (LR, ABS, DNV, GL) 10 V (0.15...80 MHz) conforming to EN/IEC 61000-4-6
Electromagnetic emission	Radiated emissions, test level: 47 dBµV/m QP with class A (radio frequency: 230 MHz...1 GHz) conforming to EN/IEC 55011 Radiated emissions, test level: 40 dBµV/m QP with class A (radio frequency: 30...230 MHz) conforming to EN/IEC 55011 Conducted emissions, test level: 63 dBµV/m QP, condition of test: power lines (radio frequency: 1.5...30 MHz) conforming to EN/IEC 55011 Conducted emissions, test level: 79...63 dBµV/m QP, condition of test: power lines (radio frequency: 150 kHz...1.5 MHz) conforming to EN/IEC 55011 Conducted emissions, test level: 120...69 dBµV/m QP, condition of test: power lines (radio frequency: 10...150 kHz) conforming to EN/IEC 55011
Immunity to microbreaks	10 ms
Ambient air temperature for operation	-10...55 °C for horizontal installation -10...50 °C for vertical installation
Ambient air temperature for storage	-25...70 °C
Relative humidity	10...95 % without condensation in storage 10...95 % without condensation in operation
IP degree of protection	IP20 with protective cover in place
Pollution degree	2
Operating altitude	0...2000 m
Storage altitude	0...3000 m
Vibration resistance	3 gn (vibration frequency: 8.4...150 Hz) on panel mounting 3.5 mm (vibration frequency: 5...8.4 Hz) on panel mounting 3 gn (vibration frequency: 8.4...150 Hz) on symmetrical rail 3.5 mm (vibration frequency: 5...8.4 Hz) on symmetrical rail
Shock resistance	15 gn for 11 ms

Offer Sustainability

Sustainable offer status	Green Premium product
RoHS (date code: YYWW)	Compliant - since 1330 - Schneider Electric declaration of conformity
REACh	Reference not containing SVHC above the threshold
Product environmental profile	Available Download Product Environmental
Product end of life instructions	Available Download End Of Life Manual

Dimensions Drawings

Dimensions

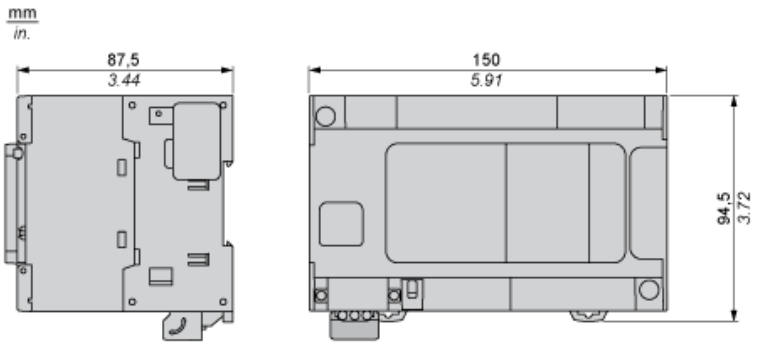

Clearance

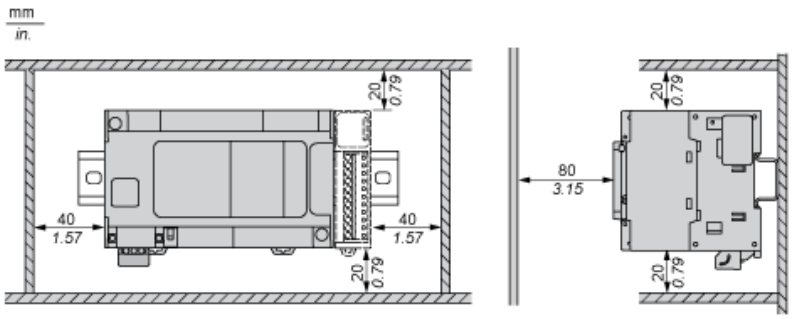

Mounting Position

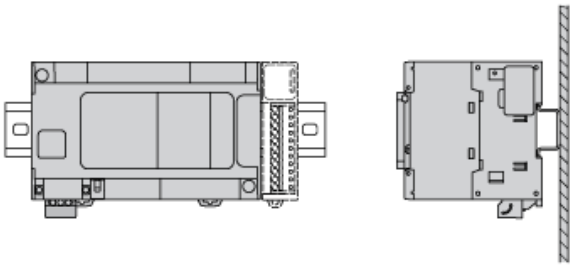

Acceptable Mounting

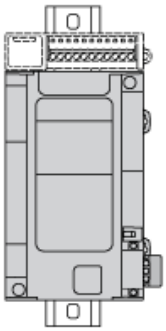

NOTE: Expansion modules must be mounted above the logic controller.

Incorrect Mounting

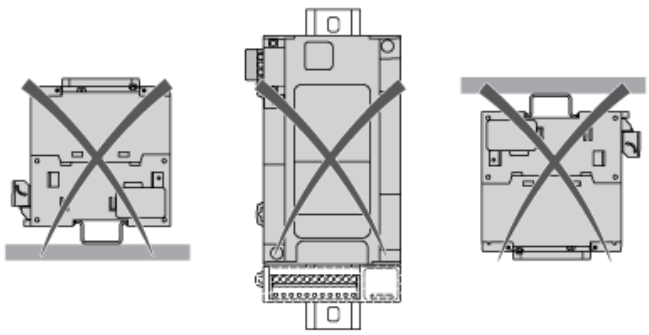

Direct Mounting On a Panel Surface

Mounting Hole Layout

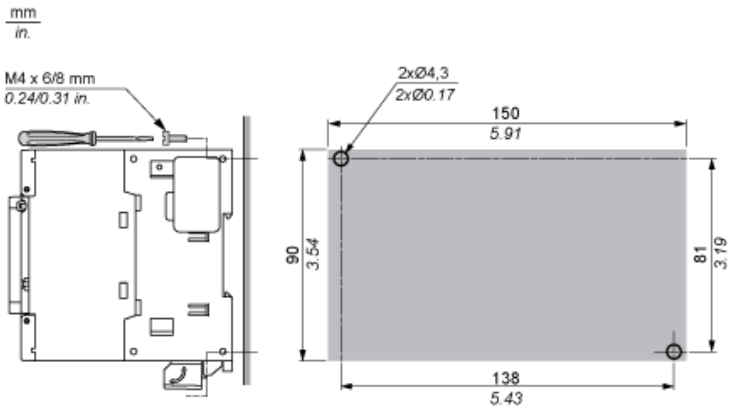

Digital Inputs

Wiring Diagram

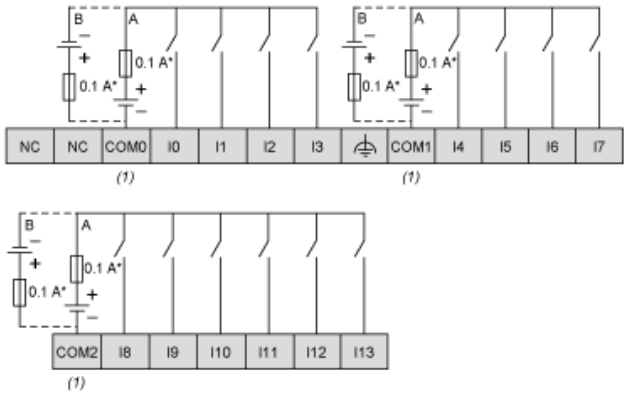

(*) : Type T fuse
(1) : The COM0, COM1 and COM2 terminals are not connected internally
(A) : Sink wiring (positive logic)
(B) : Source wiring (negative logic)

Fast Input Wiring (I0...I7)

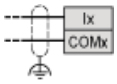

Fast Transistor Outputs

Wiring Diagram

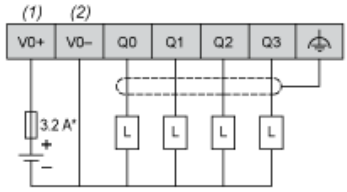

(*) : Type T fuse
(1) The V0+, V1+, V2+ and V3+ terminals are not connected internally.
(2) The V0-, V1-, V2- and V3- terminals are not connected internally.

Transistor Outputs

Wiring Diagram

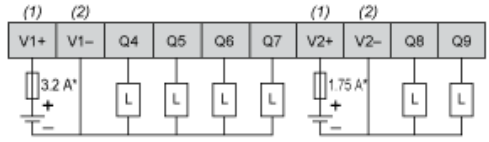

(*) : Type T fuse
(1) : The V1+ and V2+ terminals are not connected internally.
(2) : The V1– and V2– terminals are not connected internally.

USB Mini-B Connection

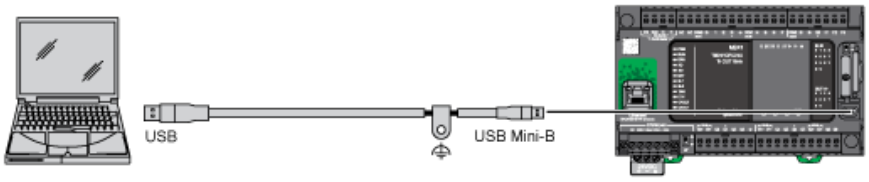
USB
USB Mini-B