Product data sheet
Characteristics

TM3XTRA1
remote transmitter module TM3 - bus



Main

Range of product	Modicon TM3
Product or component type	Remote transmitter module
Range compatibility	Modicon M221 Modicon M241 Modicon M251

Complementary

Current consumption	30 mA at 5 V DC via bus connector at state off 100 mA at 5 V DC via bus connector at state on
Power dissipation in W	<= 0.6 W
Cable length	0.5...5 m extension cable with 2 RJ45 conductor between receiver and transmitter
Local signalling	1 LED green for link status 1 LED green for power supply
Electrical connection	Screw connector terminal for connecting the functional ground RJ45 connector for connecting the bus receiver
Marking	CE
Resistance to electrostatic discharge	6 kV on contact - EN/IEC 61000-4-2 8 kV in air - EN/IEC 61000-4-2
Resistance to electromagnetic fields	1 V/m (2...2.7 GHz) - EN/IEC 61000-4-3 3 V/m (1.4 GHz...2 GHz) - EN/IEC 61000-4-3 10 V/m (80 MHz...1 GHz) - EN/IEC 61000-4-3
Resistance to conducted disturbances, induced by radio frequency fields	3 Vrms (spot frequency (2, 3, 4, 6.2, 8.2, 12.6, 16.5, 18.8, 22, 25 MHz)) - Marine specification (LR, ABS, DNV, GL) 10 Vrms (0.15...80 MHz) - EN/IEC 61000-4-6
Electromagnetic emission	Radiated emissions - EN/IEC 55011 class A 10 m, 230 MHz...1 GHz : 47 dBµV/m QP Radiated emissions - EN/IEC 55011 class A 10 m, 30...230 MHz : 40 dBµV/m QP
Mounting support	Plate or panel with fixing kit Top hat type TH35-7.5 rail conforming to IEC 60715 Top hat type TH35-15 rail conforming to IEC 60715
Height	90 mm
Depth	73.3 mm
Width	23.65 mm
Product weight	0.065 kg

The information provided in this documentation contains general descriptions and/or technical characteristics of the performance of the products contained herein.
This documentation is not intended as a substitute for and is not to be used for determining suitability or reliability of these products for specific user applications.
It is the duty of any such user or integrator to perform the appropriate and complete risk analysis, evaluation and testing of the products with respect to the relevant specific application or use thereof.
Neither Schneider Electric Industries SAS nor any of its affiliates or subsidiaries shall be responsible or liable for misuse of the information contained herein.

Environment

Standards	UL 508 IEC 61131-2 CSA C22.2 No 142 UL 1604 (Class I Division 2 Groups A/B/C) CSA C22.2 No 213 (Class I Division 2 Groups A/B/C/D)
Product certifications	CSA HazLoc C-Tick GOST Merchant Navy
Ambient air temperature for operation	-10...50 °C for vertical installation -10...55 °C for horizontal installation
Ambient air temperature for storage	-40...70 °C
Relative humidity	5...95 % without condensation
IP degree of protection	IP20 with protective cover in place
Pollution degree	2
Operating altitude	0...2000 m
Storage altitude	0...3000 m
Vibration resistance	3 gn (vibration frequency: 8.4...150 Hz) on panel 3.5 mm (vibration frequency: 5...8.4 Hz) on panel 3 gn (vibration frequency: 8.4...150 Hz) on DIN rail 3.5 mm (vibration frequency: 5...8.4 Hz) on DIN rail
Shock resistance	15 gn (test wave duration:11 ms)

Offer Sustainability

Sustainable offer status	Green Premium product
RoHS (date code: YYWW)	Compliant - since 1408 - Schneider Electric declaration of conformity
REACh	Reference not containing SVHC above the threshold
Product environmental profile	Available Download Product Environmental
Product end of life instructions	Available Download End Of Life Manual

Dimensions

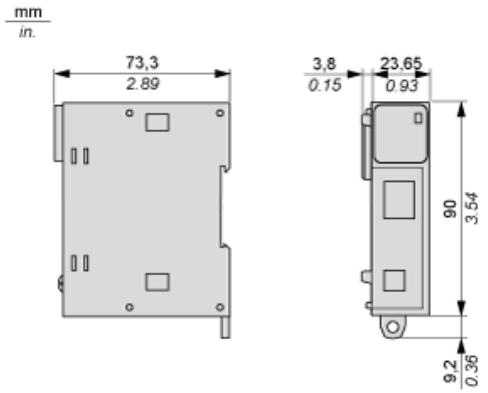

Spacing Requirements

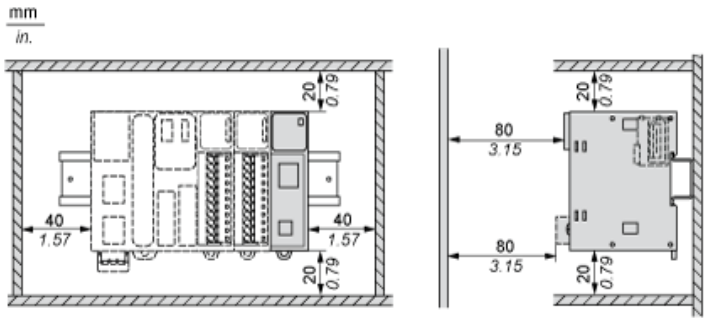

Mounting on a Rail

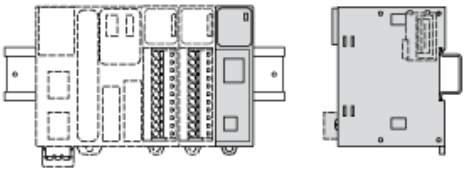

Vertical Mounting

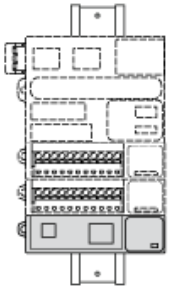

Incorrect Mounting

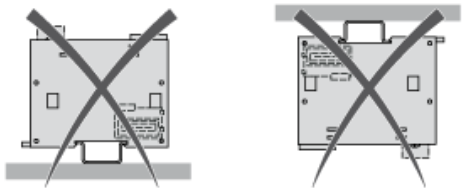

Mounting on a Panel Surface

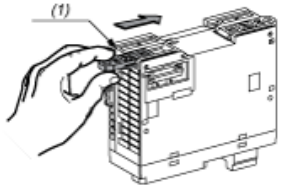

(1) Install a mounting strip

Mounting Hole Layout

