Product data sheet
Characteristics

TM3DQ8TG
module TM3 - 8 outputs transistor PNP spring



Main

Range of product	Modicon TM3
Product or component type	Discrete output module
Range compatibility	Modicon M221 Modicon M241 Modicon M251
Discrete output type	Transistor
Discrete output number	8
Discrete output logic	Positive logic (source)
Discrete output voltage	24 V DC for transistor output
Discrete output current	50 mA for transistor output

Complementary

Discrete I/O number	8
Current consumption	10 mA at 5 V DC via bus connector at state on 20 mA at 24 V DC via bus connector at state on 0 mA at 24 V DC via bus connector at state off 5 mA at 5 V DC via bus connector at state off
Response time	450 µs for turn-off 450 µs for turn-on
Leakage current	0.1 mA for transistor output
Voltage drop	0.4 V
Tungsten load	3 W for transistor output
Local signalling	1 LED per channel green for output status
Electrical connection	Removable spring terminal block pitch 5.08 mm with 11 terminal(s) of 2.5 mm² connection capacity for outputs
Cable length	<= 30 m unshielded cable for transistor output
Insulation	Non-insulated between outputs 500 V AC between output and internal logic
Marking	CE
Mounting support	Plate or panel with fixing kit Top hat type TH35-7.5 rail conforming to IEC 60715 Top hat type TH35-15 rail conforming to IEC 60715
Height	90 mm
Depth	84.6 mm
Width	27.4 mm
Product weight	0.76 kg

Environment

Standards	EN/IEC 61131-2 EN/IEC 61010-2-201
Product certifications	C-Tick CULus
Resistance to electrostatic discharge	4 kV (on contact) conforming to EN/IEC 61000-4-2 8 kV (in air) conforming to EN/IEC 61000-4-2
Resistance to electromagnetic fields	1 V/m at 2 GHz...3 GHz conforming to EN/IEC 61000-4-3 3 V/m at 1.4 GHz...2 GHz conforming to EN/IEC 61000-4-3 10 V/m at 80 MHz...1 GHz conforming to EN/IEC 61000-4-3
Resistance to fast transients	1 kV for I/O conforming to EN/IEC 61000-4-4
Surge withstand	1 kV for I/O (DC) in common mode conforming to EN/IEC 61000-4-5

The information provided in this documentation contains general descriptions and/or technical characteristics of the performance of the products contained herein.
This documentation is not intended as a substitute for and is not to be used for determining suitability or reliability of these products for specific user applications.
It is the duty of any such user or integrator to perform the appropriate and complete risk analysis, evaluation and testing of the products with respect to the relevant specific application or use thereof.
Neither Schneider Electric Industries SAS nor any of its affiliates or subsidiaries shall be responsible or liable for misuse of the information contained herein.

Resistance to conducted disturbances, induced by radio frequency fields	3 Vrms at spot frequency (2, 3, 4, 6.2, 8.2, 12.6, 16.5, 18.8, 22, 25 MHz) conforming to Marine specification (LR, ABS, DNV, GL) 10 Vrms at 0.15...80 MHz conforming to EN/IEC 61000-4-6
Electromagnetic emission	Radiated emissions, test level: 47 dBµV/m QP with class A, condition of test: 10 m (radio frequency: 230 MHz...1 GHz) conforming to EN/IEC 55011 Radiated emissions, test level: 40 dBµV/m QP with class A, condition of test: 10 m (radio frequency: 30...230 MHz) conforming to EN/IEC 55011
Ambient air temperature for operation	-10...55 °C for horizontal installation -10...35 °C for vertical installation
Ambient air temperature for storage	-25...70 °C
Relative humidity	10...95 % without condensation in storage 10...95 % without condensation in operation
IP degree of protection	IP20 with protective cover in place
Pollution degree	2
Operating altitude	0...2000 m
Storage altitude	0...3000 m
Vibration resistance	3 gn (vibration frequency: 8.4...150 Hz) on panel 3.5 mm (vibration frequency: 5...8.4 Hz) on panel 3 gn (vibration frequency: 8.4...150 Hz) on DIN rail 3.5 mm (vibration frequency: 5...8.4 Hz) on DIN rail
Shock resistance	15 gn (test wave duration:11 ms)

Offer Sustainability

Sustainable offer status	Green Premium product
RoHS (date code: YYWW)	Compliant - since 1348 - Schneider Electric declaration of conformity
REACh	Reference not containing SVHC above the threshold
Product environmental profile	Available Download Product Environmental
Product end of life instructions	Available Download End Of Life Manual

Dimensions

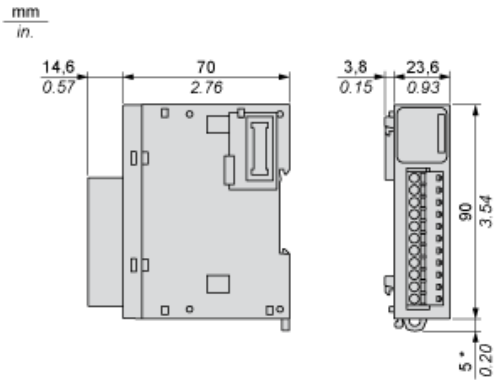

(*) 8.5 mm/0.33 in. when the clamp is pulled out.

Spacing Requirements

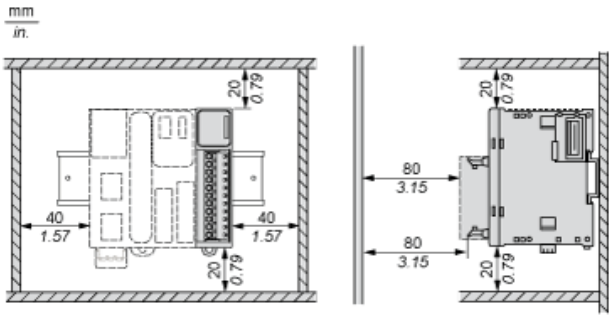

Mounting on a Rail

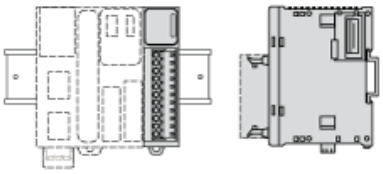

Incorrect Mounting

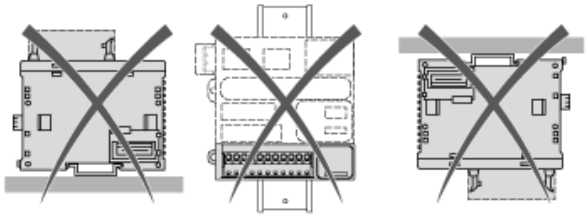

Mounting on a Panel Surface

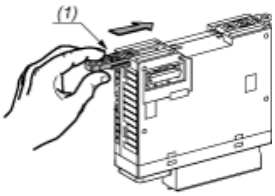

(1) Install a mounting strip

Mounting Hole Layout

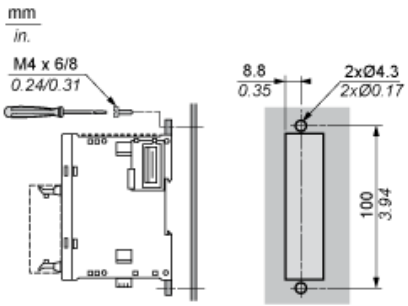

Digital Transistor Output Module (8-channel, Source)

Wiring Diagram

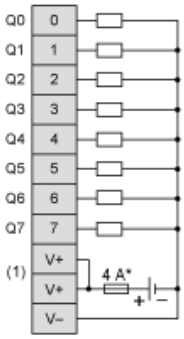

(*) Type T fuse
(1) The V+ terminals are connected internally.