# Product data sheet
## Characteristics

# TM3DQ32TK
## module TM3 - 32 outputs transistor PNP HE10



## Main

| | |
|---|---|
| Range of product | Modicon TM3 |
| Product or component type | Discrete output module |
| Range compatibility | Modicon M221<br>Modicon M241<br>Modicon M251 |
| Discrete output type | Transistor |
| Discrete output number | 32 |
| Discrete output logic | Positive logic (source) |
| Discrete output voltage | 24 V DC for transistor output |
| Discrete output current | 100 mA for transistor output |

## Complementary

| | |
|---|---|
| Discrete I/O number | 32 |
| Current consumption | 40 mA at 24 V DC via bus connector at state on<br>25 mA at 5 V DC via bus connector at state on<br>0 mA at 24 V DC via bus connector at state off<br>5 mA at 5 V DC via bus connector at state off |
| Response time | 450 µs for turn-off<br>450 µs for turn-on |
| Leakage current | 0.1 mA for transistor output |
| Voltage drop | 0.4 V |
| Tungsten load | 1.2 W for transistor output |
| Local signalling | 1 LED per channel green for output status |
| Electrical connection | HE-10 connector for outputs |
| Cable length | <= 5 m unshielded cable for transistor output |
| Insulation | Non-insulated between outputs<br>500 V AC between output and internal logic |
| Marking | CE |
| Mounting support | Plate or panel with fixing kit<br>Top hat type TH35-7.5 rail conforming to IEC 60715<br>Top hat type TH35-15 rail conforming to IEC 60715 |
| Height | 90 mm |
| Depth | 81.3 mm |
| Width | 33.5 mm |
| Product weight | 0.112 kg |

## Environment

| | |
|---|---|
| Standards | EN/IEC 61131-2<br>EN/IEC 61010-2-201 |
| Product certifications | C-Tick<br>CULus |
| Resistance to electrostatic discharge | 4 kV (on contact) conforming to EN/IEC 61000-4-2<br>8 kV (in air) conforming to EN/IEC 61000-4-2 |
| Resistance to electromagnetic fields | 1 V/m at 2 GHz...3 GHz conforming to EN/IEC 61000-4-3<br>3 V/m at 1.4 GHz...2 GHz conforming to EN/IEC 61000-4-3<br>10 V/m at 80 MHz...1 GHz conforming to EN/IEC 61000-4-3 |
| Resistance to fast transients | 1 kV for I/O conforming to EN/IEC 61000-4-4 |
| Surge withstand | 1 kV for I/O (DC) in common mode conforming to EN/IEC 61000-4-5 |

The information provided in this documentation contains general descriptions and/or technical characteristics of the performance of the products contained herein.
This documentation is not intended as a substitute for and is not to be used for determining suitability or reliability of these products for specific user applications.
It is the duty of any such user or integrator to perform the appropriate and complete risk analysis, evaluation and testing of the products with respect to the relevant specific application or use thereof.
Neither Schneider Electric Industries SAS nor any of its affiliates or subsidiaries shall be responsible or liable for misuse of the information contained herein.

| | |
|---|---|
| Resistance to conducted disturbances, induced by radio frequency fields | 3 Vrms at spot frequency (2, 3, 4, 6.2, 8.2, 12.6, 16.5, 18.8, 22, 25 MHz) conforming to Marine specification (LR, ABS, DNV, GL)<br>10 Vrms at 0.15...80 MHz conforming to EN/IEC 61000-4-6 |
| Electromagnetic emission | Radiated emissions, test level: 47 dBµV/m QP with class A, condition of test: 10 m (radio frequency: 230 MHz...1 GHz) conforming to EN/IEC 55011<br>Radiated emissions, test level: 40 dBµV/m QP with class A, condition of test: 10 m (radio frequency: 30...230 MHz) conforming to EN/IEC 55011 |
| Ambient air temperature for operation | -10...55 °C for horizontal installation<br>-10...35 °C for vertical installation |
| Ambient air temperature for storage | -25...70 °C |
| Relative humidity | 10...95 % without condensation in storage<br>10...95 % without condensation in operation |
| IP degree of protection | IP20 with protective cover in place |
| Pollution degree | 2 |
| Operating altitude | 0...2000 m |
| Storage altitude | 0...3000 m |
| Vibration resistance | 3 gn (vibration frequency: 8.4...150 Hz) on panel<br>3.5 mm (vibration frequency: 5...8.4 Hz) on panel<br>3 gn (vibration frequency: 8.4...150 Hz) on DIN rail<br>3.5 mm (vibration frequency: 5...8.4 Hz) on DIN rail |
| Shock resistance | 15 gn (test wave duration:11 ms) |

## Offer Sustainability

| | |
|---|---|
| Sustainable offer status | Green Premium product |
| RoHS (date code: YYWW) | Compliant - since 1348 - Schneider Electric declaration of conformity |
| REACh | Reference not containing SVHC above the threshold |
| Product environmental profile | Available Download Product Environmental |
| Product end of life instructions | Available Download End Of Life Manual |

## Dimensions

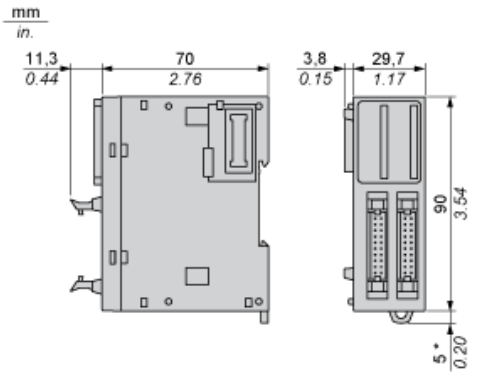


(*) 8.5 mm/0.33 in. when the clamp is pulled out.

## Spacing Requirements

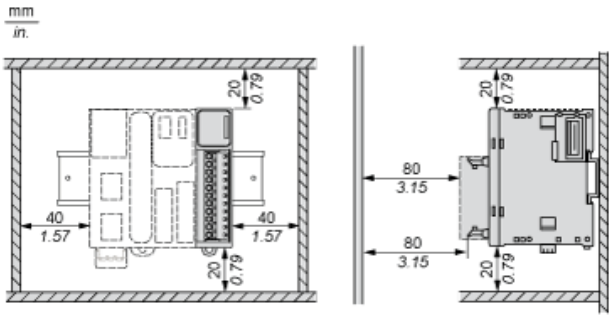


## Mounting on a Rail

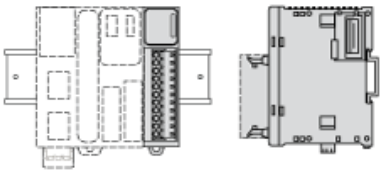

### Incorrect Mounting

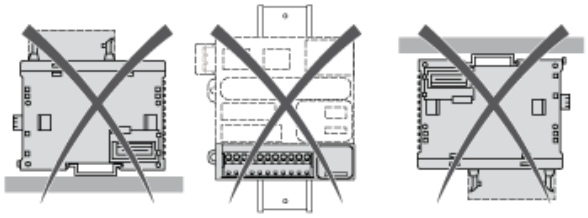

## Mounting on a Panel Surface

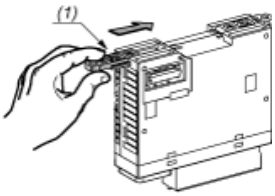


(1) Install a mounting strip

### Mounting Hole Layout

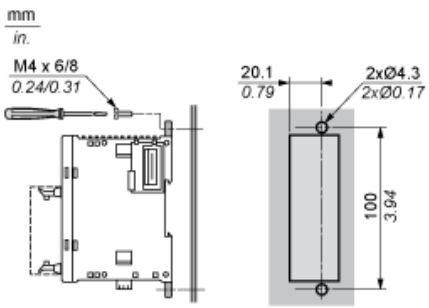

## Digital Transistor Output Module (32-channel, Source)

### Wiring Diagram

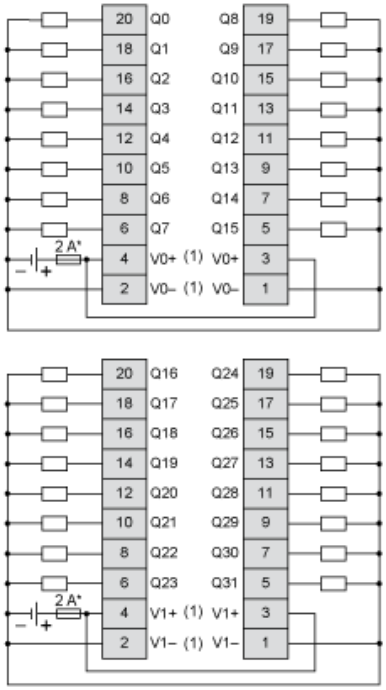


(*) Type T fuse
(1) The V0+ terminals are connected internally.
The V0- terminals are connected internally.
The V1+ terminals are connected internally.
The V1- terminals are connected internally.
The V0+ and V1+ terminals are not connected internally.
The V0- and V1- terminals are not connected internally.