Product data sheet
Characteristics

TM3DM8R
module TM3 - 8 IO relays



Main

Range of product	Modicon TM3
Product or component type	Discrete I/O module
Range compatibility	Modicon M221 Modicon M241 Modicon M251
Discrete input number	4 input conforming to IEC 61131-2 Type 1
Discrete input logic	Sink or source (positive/negative)
Discrete input voltage	24 V
Discrete input current	7 mA for input
Discrete output type	Relay normally open
Discrete output number	4
Discrete output logic	Positive or negative
Discrete output voltage	240 V AC for relay output 24 V DC for relay output
Discrete output current	2000 mA for relay output

Complementary

Discrete I/O number	8
Current consumption	25 mA at 5 V DC via bus connector at state on 0 mA at 24 V DC via bus connector at state off 0 mA at 24 V DC via bus connector at state on 5 mA at 5 V DC via bus connector at state off
Discrete input voltage type	DC
Voltage state1 guaranteed	15...28.8 V for input
Current state 1 guaranteed	>= 2.5 mA for input
Voltage state 0 guaranteed	0...5 V for input
Current state 0 guaranteed	<= 1 mA for input
Input impedance	3.4 kOhm
Response time	4 ms for turn-off 4 ms for turn-on
Current per output common	7 A
Mechanical durability	20000000 cycles
Minimum load	10 mA at 5 V DC for relay output
Local signalling	1 LED per channel green for I/O state
Electrical connection	Removable screw terminal block pitch 5.08 mm with 11 terminal(s) of 2.5 mm² connection capacity for inputs and outputs
Cable length	<= 30 m unshielded cable for regular input
Insulation	Non-insulated between outputs 500 V AC between output and internal logic 750 V AC between open contact 1500 V AC between input groups and output groups Non-insulated between inputs 500 V AC between input and internal logic
Marking	CE
Mounting support	Plate or panel with fixing kit Top hat type TH35-7.5 rail conforming to IEC 60715 Top hat type TH35-15 rail conforming to IEC 60715
Height	90 mm
Depth	84.6 mm

The information provided in this documentation contains general descriptions and/or technical characteristics of the performance of the products contained herein.
This documentation is not intended as a substitute for and is not to be used for determining suitability or reliability of these products for specific user applications.
It is the duty of any such user or integrator to perform the appropriate and complete risk analysis, evaluation and testing of the products with respect to the relevant specific application or use thereof.
Neither Schneider Electric Industries SAS nor any of its affiliates or subsidiaries shall be responsible or liable for misuse of the information contained herein.

Width	27.4 mm
Product weight	0.95 kg

Environment

Standards	EN/IEC 61131-2 EN/IEC 61010-2-201
Product certifications	C-Tick CULus
Resistance to electrostatic discharge	4 kV (on contact) conforming to EN/IEC 61000-4-2 8 kV (in air) conforming to EN/IEC 61000-4-2
Resistance to electromagnetic fields	1 V/m at 2 GHz...3 GHz conforming to EN/IEC 61000-4-3 3 V/m at 1.4 GHz...2 GHz conforming to EN/IEC 61000-4-3 10 V/m at 80 MHz...1 GHz conforming to EN/IEC 61000-4-3
Resistance to fast transients	2 kV for relay output conforming to EN/IEC 61000-4-4 1 kV for I/O conforming to EN/IEC 61000-4-4
Surge withstand	1 kV for input in common mode conforming to EN/IEC 61000-4-5 2 kV for output in common mode conforming to EN/IEC 61000-4-5
Resistance to conducted disturbances, induced by radio frequency fields	3 Vrms at spot frequency (2, 3, 4, 6.2, 8.2, 12.6, 16.5, 18.8, 22, 25 MHz) conforming to Marine specification (LR, ABS, DNV, GL) 10 Vrms at 0.15...80 MHz conforming to EN/IEC 61000-4-6
Electromagnetic emission	Radiated emissions, test level: 47 dBµV/m QP with class A, condition of test: 10 m (radio frequency: 230 MHz...1 GHz) conforming to EN/IEC 55011 Radiated emissions, test level: 40 dBµV/m QP with class A, condition of test: 10 m (radio frequency: 30...230 MHz) conforming to EN/IEC 55011
Ambient air temperature for operation	-10...55 °C for horizontal installation -10...35 °C for vertical installation
Ambient air temperature for storage	-25...70 °C
Relative humidity	10...95 % without condensation in storage 10...95 % without condensation in operation
IP degree of protection	IP20 with protective cover in place
Pollution degree	2
Operating altitude	0...2000 m
Storage altitude	0...3000 m
Vibration resistance	3 gn (vibration frequency: 8.4...150 Hz) on panel 3.5 mm (vibration frequency: 5...8.4 Hz) on panel 3 gn (vibration frequency: 8.4...150 Hz) on DIN rail 3.5 mm (vibration frequency: 5...8.4 Hz) on DIN rail
Shock resistance	15 gn (test wave duration:11 ms)

Offer Sustainability

Sustainable offer status	Green Premium product
RoHS (date code: YYWW)	Compliant - since 1348 - Schneider Electric declaration of conformity
REACh	Reference not containing SVHC above the threshold
Product environmental profile	Available Download Product Environmental
Product end of life instructions	Available Download End Of Life Manual

Dimensions Drawings

Dimensions

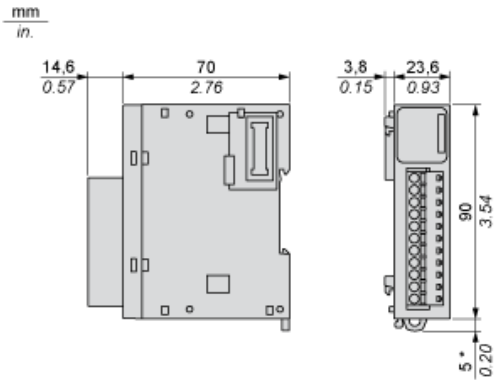

(*) 8.5 mm/0.33 in. when the clamp is pulled out.

Spacing Requirements

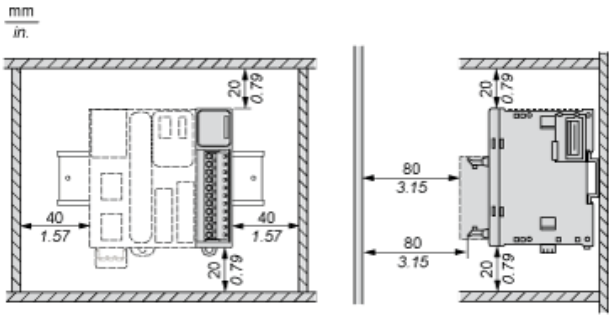

Mounting on a Rail

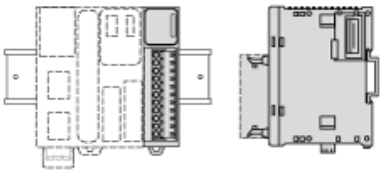

Incorrect Mounting

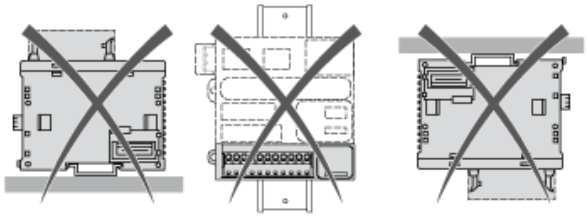

Mounting on a Panel Surface

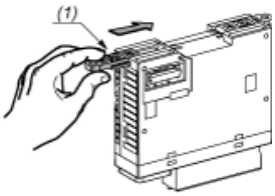

(1) Install a mounting strip

Mounting Hole Layout

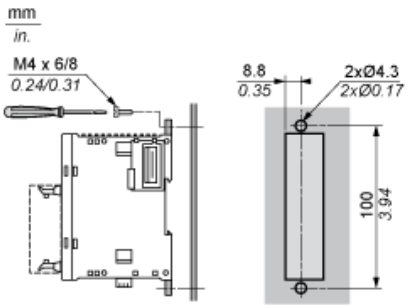

Digital Mixed I/O Module (8-channel)

Wiring Diagram (Sink / Source)

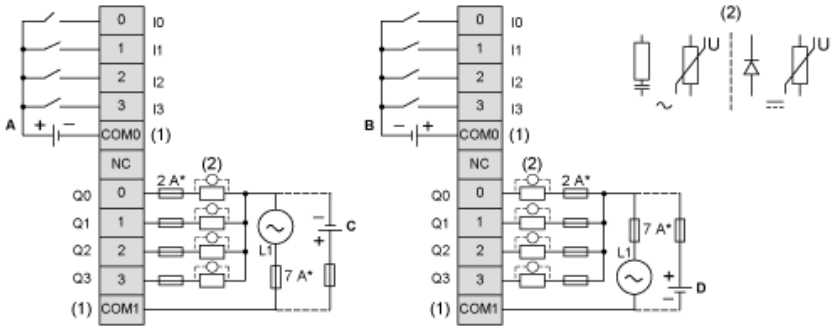

(*) Type T fuse
(1) The COM0 and COM1 terminals are not connected internally.
(2) To improve the life time of the contacts, and to protect from potential inductive load damage, it is recommended to connect a free wheeling diode in parallel to each inductive DC load or an RC snubber in parallel of each inductive AC load.
(A) Sink wiring (positive logic)
(B) Source wiring (negative logic)
(C) Source wiring (positive logic)
(D) Sink wiring (negative logic)