Product data sheet
Characteristics

TM3XTYS4
module TM3 tesys interface 4XRJ45



Main

Range of product	Modicon TM3
Product or component type	Parallel interface module
Product specific application	TeSys Quickfit TeSys U TeSys D
Range compatibility	Modicon M221 Modicon M241 Modicon M251
[Us] rated supply voltage	24 V DC by external supply (- 15...20 %)
Number of input channels	12
Number of output channels	8

Complementary

Current consumption	1200 mA at 24 V DC external power supply at state on 10 mA at 24 V DC via bus connector at state off 0 mA at 24 V DC via bus connector at state on 35 mA at 5 V DC via bus connector at state off 5 mA at 5 V DC via bus connector at state on
Input voltage limits	19.2...28.8 V per input
Input current limits	5 mA per input
Response time	< 10 ms turn-off for input < 10 ms turn-on for input
Output voltage	24 V DC (transistor output)
Maximum load current	300 mA per channel in normal mode 800 mA per channel in starting mode during 100 ms
Insulation	Non-insulated between RJ45 connectors Between the RJ45 connectors and internal logic : 500 V AC
Output protection type	Against overload by current limiter
Reset	Automatic reset
Local signalling	2 LEDs green per channel for output status 3 LEDs green per channel for input status
Electrical connection	4 RJ45 connectors for connecting the motor starters Removable screw terminal block with pitch 5.08 mm, clamping capacity 2.5 mm², 3 terminals for connecting the 24 V DC power supply
Standards	EN/IEC 61131-2 EN/IEC 61010-2-201
Product certifications	C-Tick CULus
Marking	CE
Resistance to electrostatic discharge	4 kV on contact - EN/IEC 61000-4-2 8 kV in air - EN/IEC 61000-4-2
Resistance to electromagnetic fields	1 V/m (2 GHz...3 GHz) - EN/IEC 61000-4-3 3 V/m (1.4 GHz...2 GHz) - EN/IEC 61000-4-3 10 V/m (80 MHz...1 GHz) - EN/IEC 61000-4-3
Resistance to magnetic fields	30 A/m (50...60 Hz) - EN/IEC 61000-4-8
Resistance to fast transients	1 kV for output - EN/IEC 61000-4-4 1 kV for input - EN/IEC 61000-4-4
Surge withstand	1 kV for output in common mode - EN/IEC 61000-4-5 1 kV for input in common mode - EN/IEC 61000-4-5

The information provided in this documentation contains general descriptions and/or technical characteristics of the performance of the products contained herein.
This documentation is not intended as a substitute for and is not to be used for determining suitability or reliability of these products for specific user applications.
It is the duty of any such user or integrator to perform the appropriate and complete risk analysis, evaluation and testing of the products with respect to the relevant specific application or use thereof.
Neither Schneider Electric Industries SAS nor any of its affiliates or subsidiaries shall be responsible or liable for misuse of the information contained herein.

Resistance to conducted disturbances, induced by radio frequency fields	3 Vrms (spot frequency (2, 3, 4, 6.2, 8.2, 12.6, 16.5, 18.8, 22, 25 MHz)) - Marine specification (LR, ABS, DNV, GL) 10 Vrms (0.15...80 MHz) - EN/IEC 61000-4-6
Electromagnetic emission	Radiated emissions - EN/IEC 55011 class A 10 m, 230 MHz...1 GHz : 47 dBµV/m QP Radiated emissions - EN/IEC 55011 class A 10 m, 30...230 MHz : 40 dBµV/m QP
Vibration resistance	3 gn (f = 8.4...150 Hz) on panel 3.5 mm (f = 5...8.4 Hz) on panel 3 gn (f = 8.4...150 Hz) on DIN rail 3.5 mm (f = 5...8.4 Hz) on DIN rail
Shock resistance	15 gn during 11 ms
Mounting support	Plate or panel with fixing kit Rail top hat type TH35-7.5 conforming to IEC 60715 Rail top hat type TH35-15 conforming to IEC 60715
Height	90 mm
Depth	85 mm
Width	30 mm
Product weight	0.115 kg

Environment

Ambient air temperature for operation	Horizontal installation : -10...55 °C Vertical installation : -10...35 °C
Ambient air temperature for storage	-25...70 °C
Relative humidity	10...95 % without condensation in storage 10...95 % without condensation in operation
IP degree of protection	IP20 with protective cover in place
Pollution degree	2
Operating altitude	0...2000 m
Storage altitude	0...3000 m

Offer Sustainability

Sustainable offer status	Green Premium product
RoHS (date code: YYWW)	Compliant - since 1348 - Schneider Electric declaration of conformity
REACh	Reference not containing SVHC above the threshold
Product environmental profile	Available Download Product Environmental
Product end of life instructions	Available Download End Of Life Manual

Dimensions

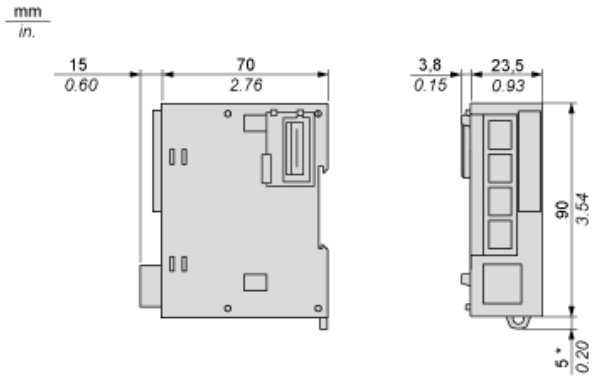

(*) 8.5 mm/0.33 in when the clamp is pulled out.

Spacing Requirements

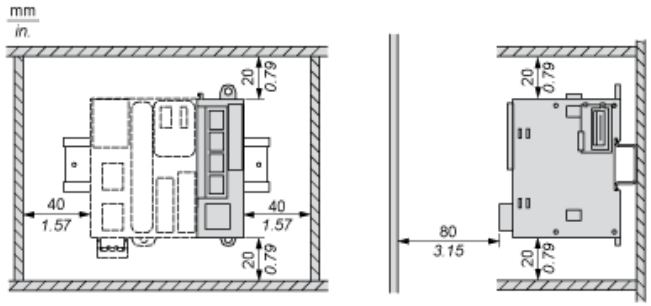

Mounting on a Rail

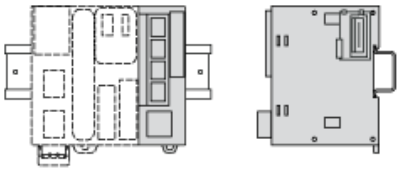

Incorrect Mounting

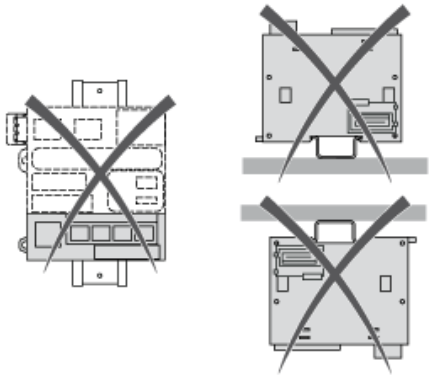

Mounting on a Panel Surface

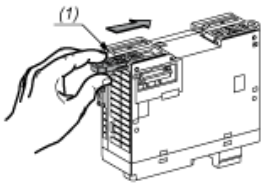

(1) Install a mounting strip

Mounting Hole Layout

