# Product data sheet
## Characteristics

# TM241C24R
## controller M241 24 IO relay



## Main

| | |
|---|---|
| Range of product | Modicon M241 |
| Product or component type | Logic controller |
| Discrete input number | 14 discrete input including 8 fast input conforming to IEC 61131-2 Type 1 |
| Discrete output type | Relay<br>Transistor |
| Discrete output number | 4 transistor including 4 fast output<br>6 relay |
| Discrete output voltage | 24 V DC for transistor output<br>5...250 V AC for relay output<br>5...125 V DC for relay output |
| Discrete output current | 0.5 A with TR0...TR3 terminal(s) for transistor output<br>0.1 A with TR0...TR3 terminal(s) for fast output (PTO mode)<br>2 A with Q4...Q9 terminal(s) for relay output |
| [Us] rated supply voltage | 100...240 V AC |

## Complementary

| | |
|---|---|
| Discrete I/O number | 24 |
| Discrete input logic | Sink or source |
| Discrete input voltage | 24 V |
| Discrete input voltage type | DC |
| Voltage state1 guaranteed | >= 15 V for input |
| Current state 1 guaranteed | >= 5 mA for fast input<br>>= 2.5 mA for input |
| Voltage state 0 guaranteed | <= 5 V for input |
| Current state 0 guaranteed | <= 1.5 mA for fast input<br><= 1 mA for input |
| Discrete input current | 5 mA for input |
| Input impedance | 4.7 kOhm for input |
| Response time | 50 µs turn-on operation with I0...I13 terminal(s) for input |
| Configurable filtering time | 1 µs for fast input |
| Number of I/O expansion module | 14 (remote I/O architecture)<br>7 (local I/O architecture) |
| Discrete output logic | Positive logic (source) |
| Output voltage limits | 277 V AC relay output<br>30 V DC transistor output<br>125 V DC relay output |
| Output frequency | <= 100 kHz for fast output (PLS mode)<br><= 20 kHz for fast output (PWM mode)<br><= 1 kHz for transistor output |
| Accuracy | +/- 1 % at 100 Hz...1 kHz for fast output<br>+/- 0.1 % at 20...100 Hz for fast output |
| Protection type | Without protection for relay output<br>Reverse polarity protection for transistor output<br>Short-circuit and overload protection with automatic reset for transistor output<br>Short-circuit protection for transistor output |
| Reset time | 12 s fast output<br>10 ms output |
| Execution time for 1 KInstruction | 0.7 ms for other instruction<br>0.3 ms for event and periodic task |

The information provided in this documentation contains general descriptions and/or technical characteristics of the performance of the products contained herein.
This documentation is not intended as a substitute for and is not to be used for determining suitability or reliability of these products for specific user applications.
It is the duty of any such user or integrator to perform the appropriate and complete risk analysis, evaluation and testing of the products with respect to the relevant specific application or use thereof.
Neither Schneider Electric Industries SAS nor any of its affiliates or subsidiaries shall be responsible or liable for misuse of the information contained herein.

| | |
|---|---|
| Memory capacity | 64 MB for system memory RAM<br>8 MB for program |
| Data backed up | 128 MB built-in flash memory for backup of user programs |
| Data storage equipment | <= 32 GB SD card optional |
| Battery type | BR2032 lithium non-rechargeable, battery life: 4 yr |
| Backup time | 2 years at 25 °C |
| Application structure | 8 event tasks<br>4 cyclic master tasks<br>3 cyclic master tasks + 1 freewheeling task<br>8 external event tasks |
| Realtime clock | With |
| Clock drift | <= 60 s/month at 25 °C |
| Positioning functions | PWM/PTO function 4 channel(s) (positioning frequency: 100 kHz) |
| Control signal type | Single phase signal at 200 kHz for fast input (HSC mode)<br>Pulse/Direction signal at 200 kHz for fast input (HSC mode)<br>A/B signal at 100 kHz for fast input (HSC mode) |
| Counting input number | 4 fast input (HSC mode) |
| Integrated connection type | USB port with connector mini B USB 2.0<br>Non isolated serial link "serial 2" with connector removable screw terminal block and interface RS485<br>Non isolated serial link "serial 1" with connector RJ45 and interface RS232/ RS485 |
| Supply | Serial link supply "serial 1" at 5 V, 200 mA |
| Transmission rate | 480 Mbit/s for bus length of 3 m - communication protocol: USB<br>1.2...115.2 kbit/s (115.2 kbit/s by default) for bus length of 3 m - communication protocol: RS232<br>1.2...115.2 kbit/s (115.2 kbit/s by default) for bus length of 15 m - communication protocol: RS485 |
| Communication port protocol | Modbus non isolated serial link with master/slave method |
| Supply voltage limits | 85...264 V |
| Network frequency | 50/60 Hz |
| Sensor power supply | 24 V DC at 400 mA supplied by the controller |
| Cable length | <= 3 m shielded cable for fast output<br><= 50 m unshielded cable for output<br><= 10 m shielded cable for fast input<br><= 50 m unshielded cable for input |
| Local signalling | 1 LED per channel green for I/O state<br>1 LED red for bus fault on TM4 (TM4)<br>1 LED green for SL2<br>1 LED green for SL1<br>1 LED red for BAT<br>1 LED green for SD card access (SD)<br>1 LED red for I/O error (I/O)<br>1 LED red for module error (ERR)<br>1 LED green for RUN<br>1 LED green for PWR |
| Electrical connection | Removable screw terminal block for connecting the 24 V DC power supply (pitch 5.08 mm)<br>Removable screw terminal block for inputs and outputs (pitch 5.08 mm) |
| Insulation | Non-insulated between supply and ground<br>500 V AC between supply and internal logic |
| Marking | CE |
| Surge withstand | 1 kV for transistor output in common mode conforming to EN/IEC 61000-4-5<br>1 kV for input in common mode conforming to EN/IEC 61000-4-5<br>1 kV for relay output in differential mode conforming to EN/IEC 61000-4-5<br>1 kV for power lines (AC) in differential mode conforming to EN/IEC 61000-4-5<br>1 kV for shielded cable in common mode conforming to EN/IEC 61000-4-5<br>2 kV for relay output in common mode conforming to EN/IEC 61000-4-5<br>2 kV for power lines (AC) in common mode conforming to EN/IEC 61000-4-5 |
| Mounting support | Plate or panel with fixing kit<br>Top hat type TH35-7.5 rail conforming to IEC 60715<br>Top hat type TH35-15 rail conforming to IEC 60715 |
| Height | 90 mm |
| Depth | 95 mm |
| Width | 150 mm |
| Product weight | 0.53 kg |

## Environment

| | |
|---|---|
| Standards | CSA C22.2 No 142<br>UL 1604<br>UL 508<br>ANSI/ISA 12-12-01<br>CSA C22.2 No 213<br>EN/IEC 61131-2 : 2007<br>Marine specification (LR, ABS, DNV, GL) |
| Product certifications | CSA<br>CULus<br>IACS E10<br>RCM |
| Resistance to electrostatic discharge | 4 kV on contact conforming to EN/IEC 61000-4-2<br>8 kV in air conforming to EN/IEC 61000-4-2 |
| Resistance to electromagnetic fields | 1 V/m (2 GHz...3 GHz) conforming to EN/IEC 61000-4-3<br>3 V/m (1.4 GHz...2 GHz) conforming to EN/IEC 61000-4-3<br>10 V/m (80 MHz...1 GHz) conforming to EN/IEC 61000-4-3 |
| Resistance to fast transients | 1 kV for transistor output conforming to EN/IEC 61000-4-4<br>1 kV for input conforming to EN/IEC 61000-4-4<br>1 kV for serial link conforming to EN/IEC 61000-4-4<br>2 kV for relay output conforming to EN/IEC 61000-4-4<br>2 kV for power lines conforming to EN/IEC 61000-4-4 |
| Resistance to conducted disturbances, induced by radio frequency fields | 10 V (spot frequency (2, 3, 4, 6.2, 8.2, 12.6, 16.5, 18.8, 22, 25 MHz)) conforming to Marine specification (LR, ABS, DNV, GL)<br>3 V (0.1...80 MHz) conforming to Marine specification (LR, ABS, DNV, GL)<br>10 V (0.15...80 MHz) conforming to EN/IEC 61000-4-6 |
| Electromagnetic emission | Radiated emissions, test level: 47 dBµV/m QP with class A, condition of test: 10 m (radio frequency: 230 MHz...1 GHz) conforming to EN/IEC 55011<br>Radiated emissions, test level: 40 dBµV/m QP with class A, condition of test: 10 m (radio frequency: 30...230 MHz) conforming to EN/IEC 55011<br>Conducted emissions, test level: 73 dBµV/m QP/60 dBµV/m AV, condition of test: power lines (radio frequency: 0.5...300 MHz) conforming to EN/IEC 55011<br>Conducted emissions, test level: 79 dBµV/m QP/66 dBµV/m AV, condition of test: power lines (radio frequency: 0.15...0.5 MHz) conforming to EN/IEC 55011<br>Conducted emissions, test level: 63 dBµV/m QP, condition of test: power lines (radio frequency: 1.5...30 MHz) conforming to EN/IEC 55011<br>Conducted emissions, test level: 79...63 dBµV/m QP, condition of test: power lines (radio frequency: 150 kHz...1.5 MHz) conforming to EN/IEC 55011<br>Conducted emissions, test level: 120...69 dBµV/m QP, condition of test: power lines (radio frequency: 10...150 kHz) conforming to EN/IEC 55011 |
| Immunity to microbreaks | 10 ms |
| Ambient air temperature for operation | -10...55 °C for horizontal installation<br>-10...50 °C for vertical installation |
| Ambient air temperature for storage | -25...70 °C |
| Relative humidity | 10...95 % without condensation in storage<br>10...95 % without condensation in operation |
| IP degree of protection | IP20 with protective cover in place |
| Pollution degree | 2 |
| Operating altitude | 0...2000 m |
| Storage altitude | 0...3000 m |
| Vibration resistance | 3 gn (vibration frequency: 8.4...150 Hz) on panel mounting<br>3.5 mm (vibration frequency: 5...8.4 Hz) on panel mounting<br>3 gn (vibration frequency: 8.4...150 Hz) on symmetrical rail<br>3.5 mm (vibration frequency: 5...8.4 Hz) on symmetrical rail |
| Shock resistance | 15 gn for 11 ms |

## Offer Sustainability

| | |
|---|---|
| Sustainable offer status | Green Premium product |
| RoHS (date code: YYWW) | Compliant - since 1350 - Schneider Electric declaration of conformity |
| REACh | Reference not containing SVHC above the threshold |
| Product environmental profile | Available |
| Product end of life instructions | Available |

## Dimensions Drawings

### Dimensions

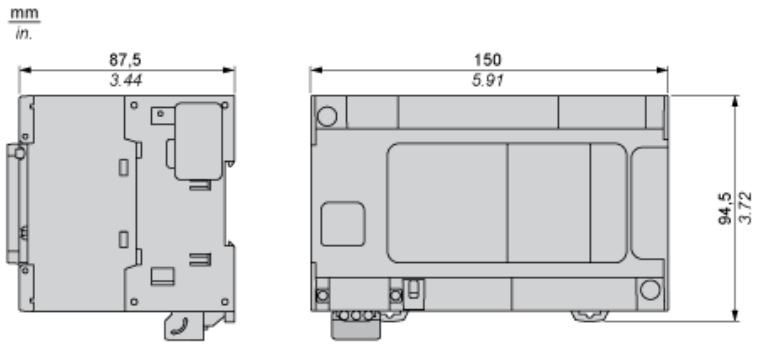

## Clearance

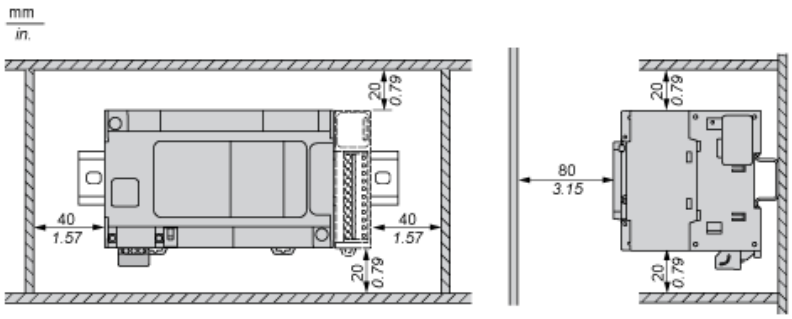


## Mounting Position

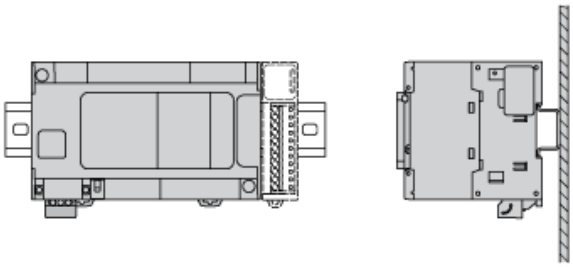

### Acceptable Mounting

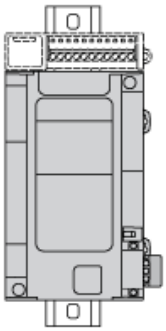

NOTE: Expansion modules must be mounted above the logic controller.

### Incorrect Mounting

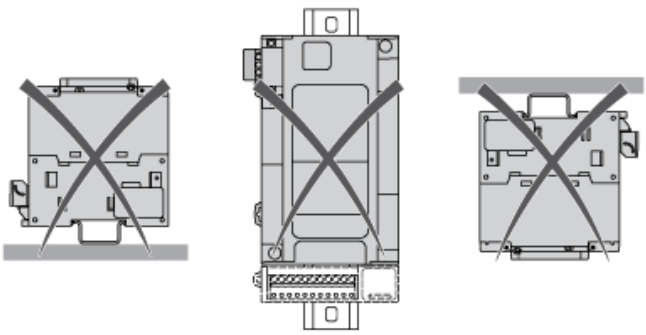

## Direct Mounting On a Panel Surface

## Mounting Hole Layout

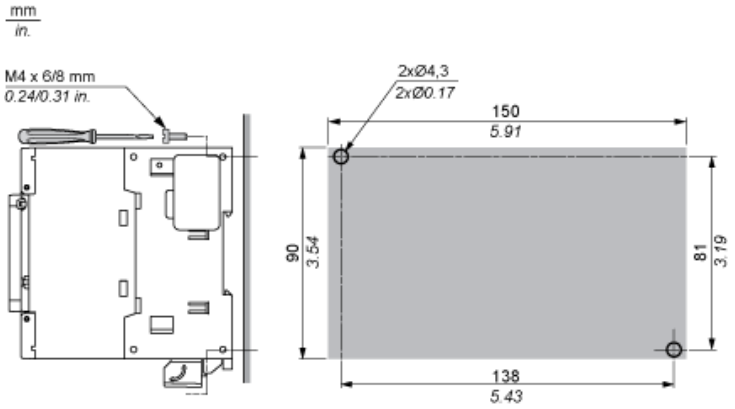

## Digital Inputs

### Wiring Diagram (Positive Logic)

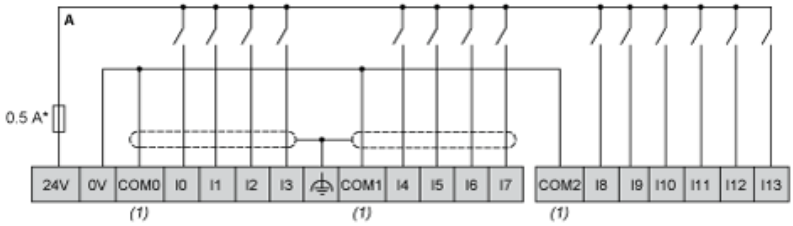


(*) : Type T fuse
(1) : The COM0, COM1 and COM2 terminals are not connected internally.

### Wiring Diagram (Negative Logic)

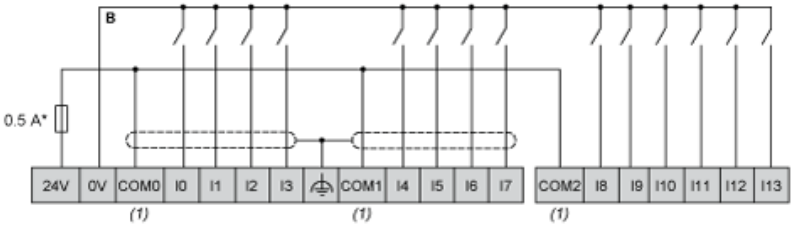


(*) : Type T fuse
(1) : The COM0, COM1 and COM2 terminals are not connected internally.

## Fast Transistor Outputs

### Wiring Diagram

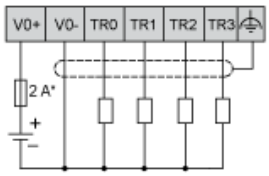


(*) : 2 A fast-blow fuse

## Relay Outputs

### Wiring Diagram

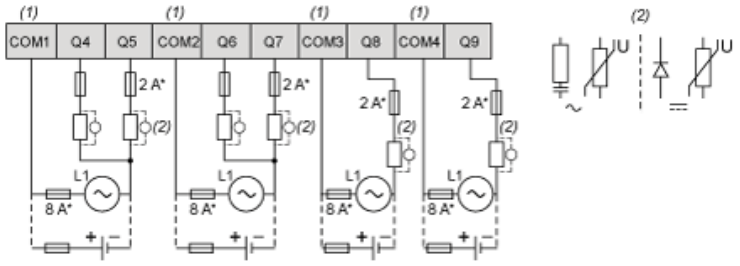


(*) : Type T fuse
(1) : The terminals COM1 to COM4 are not connected internally.
(2) : To improve the life time of the contacts, and to protect from potential inductive load damage, you must connect a free wheeling diode in parallel to each inductive DC load or an RC snubber in parallel of each inductive AC load

## USB Mini-B Connection

