

Pressure switch, 3p, 7bar

Part no. MCSN4
Article no. 057679
Catalog No. MCSN4

Powering Business Worldwide

Delivery programme

Product range			Pressure switches with main contacts
Degree of Protection			IP65
Pole			3 pole
Cut-in pressure and cut-out pressure: separate stepless adjustment. All the intersection points within the diagram area can be set.			
			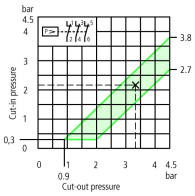
			Min. switching differential: 0.6 bar Example: Cut-out pressure 3.3 bar Cut-in pressure 2.2 bar
			Variable switching differential
Max. operating pressure		bar	7

Notes

Features

:

- With terminal cover as standard
- 1 insulated protective conductor terminal
- 1 insulated N terminal
- 2 cable entry knockouts for M20, without cable gland
- IP65 in conjunction with V-M20 cable gland
- Pressure pipe flange R ½"
- please enquire: Pressure pipe flange R ¼"
- Neoprene membrane

R ¼" corresponds to G ¼

R ½" corresponds to G ½ as per ISO 228-1

For use as a motor load switch as per IEC/EN 60947-4-1 for:

Three-phase current

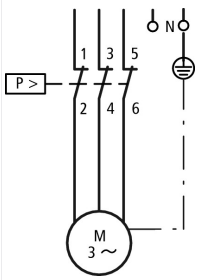

Single-phase current

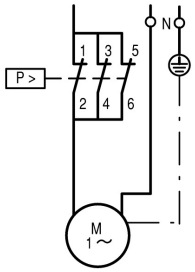

Direct current DC-3

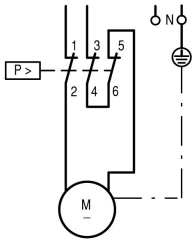

For use as control switch:

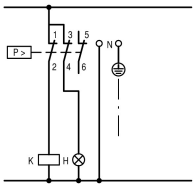

Cut-in and cut-out pressures are factory-preset as specified with type suffix → 203948

Technical data

General

Standards			IEC/EN 60947-4-1
Test pressure		bar	32
Rupturing pressure		bar	90
Operating frequency	Operations/h		1500
Climatic proofing			Damp heat, constant, to IEC 60068-2-78 Damp heat, cyclic, to IEC 60068-2-30
Ambient temperature			-25 - 70
Degree of Protection			IP65
Mounting position			As required
Mechanical shock resistance to IEC 60068-2-27	Half-sinusoidal shock 20 ms	g	> 10
Vibration resistance acc. to IEC/EN 60068-2-6	Amplitude 1 mm	Hz	36
lifespan	Operations	x 10^6	0.5
Terminal capacities		mm^2	
Solid		mm^2	1 x (0.75 - 2.5) 2 x (0.75 - 1.5)
Flexible with ferrules to DIN 46228		mm^2	1 x (0.5 - 1.5) 2 x (0.5 - 1.5)
Terminations			Flat terminal with clamping washer
Terminal screw			M4
Tightening torque of terminal screw		Nm	1.2

Contacts/switching capacity

Rated impulse withstand voltage	U_{imp}	V AC	4000
Rated insulation voltage	U_i	V	400
Overvoltage category/pollution degree			III/3
Max. short-circuit protective device			

Fuseless		Type	PKZM0-20
Fuse	gG/gL	A	20
Type of coordination			1
Rated short-circuit current	I_q (= Current r)	kA	1
AC-3			
Rated operational current			
230 V		A	15
400 V		A	11.5
Rated power P			
230 V		kW	4
400 V		kW	5.5
DC - 3			
Rated operational current			
24 V		A	16
110 V		A	12.5
250 V		A	2
Rated frequency	f	Hz	50

Design verification as per IEC/EN 61439

Technical data for design verification			
Operating ambient temperature min.		°C	-25
Operating ambient temperature max.		°C	70

Technical data ETIM 6.0

Low-voltage industrial components (EG000017) / Pressure switch (EC000243)

Electric engineering, automation, process control engineering / Low-voltage switch technology / Monitoring equipment (low-voltage switch technology) / Pressure monitoring equipment (ecl@ss8.1-27-37-18-14 [AKF108011])

Suitable as guard			Yes
Suitable as 2-point controller			Yes
Suitable as limiter			No
Max. operation pressure		hPa	7000
Engaging pressure		bar	0 - 3.8
Initial setting		hPa	0 - 0
Switch off pressure		bar	0 - 4.5
End setting		hPa	0 - 0
Pressure-switching differential		bar	0
Max. test pressure		bar	32
Bursting pressure		bar	90
Medium temperature		°C	-25 - 80
Type of pressure connection			R 1/2 inch
Rated voltage Ue at AC 50 Hz		V	0 - 400
Rated voltage Ue at AC 60 Hz		V	0 - 400
Rated voltage Ue at DC		V	0 - 250
Initial value measuring range pressure		Pa	0
End value measuring range pressure		Pa	0
Rated operation power at AC-3, 400 V		kW	5.5
Switching capacity at AC-3, 240 V		kA	0
Rated operation current Ie at AC-1, 400 V		A	0
Rated operation current Ie at AC-3, 400 V		A	11.5
Number of auxiliary contacts as normally open contact			0
Number of auxiliary contacts as normally closed contact			0
Number of auxiliary contacts as change-over contact			0
Type of electric connection			Screw connection
Number of normally closed contacts as main contact			3
Number of main contacts as normally open contact			0

Adjustable current range	A	0 - 0
With hand operation		No
With manual on/off switch		No
Degree of protection (IP)		IP65
Electronic version		No
Explosion-proof		No

Approvals

Product Standards	CSA-CC22.2 No. 14
CSA File No.	12528
CSA Class No.	3211-06
North America Certification	CSA certified

Dimensions

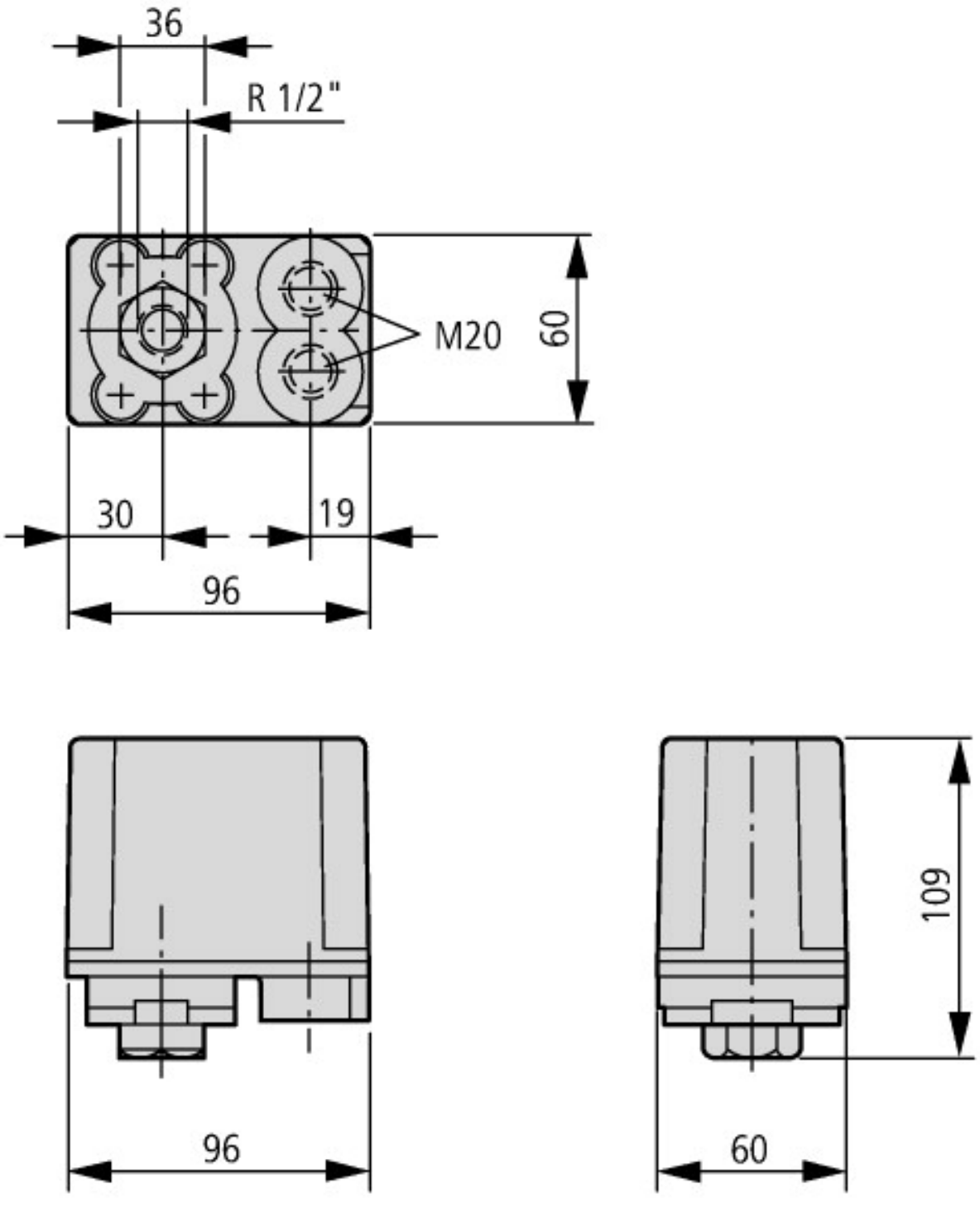

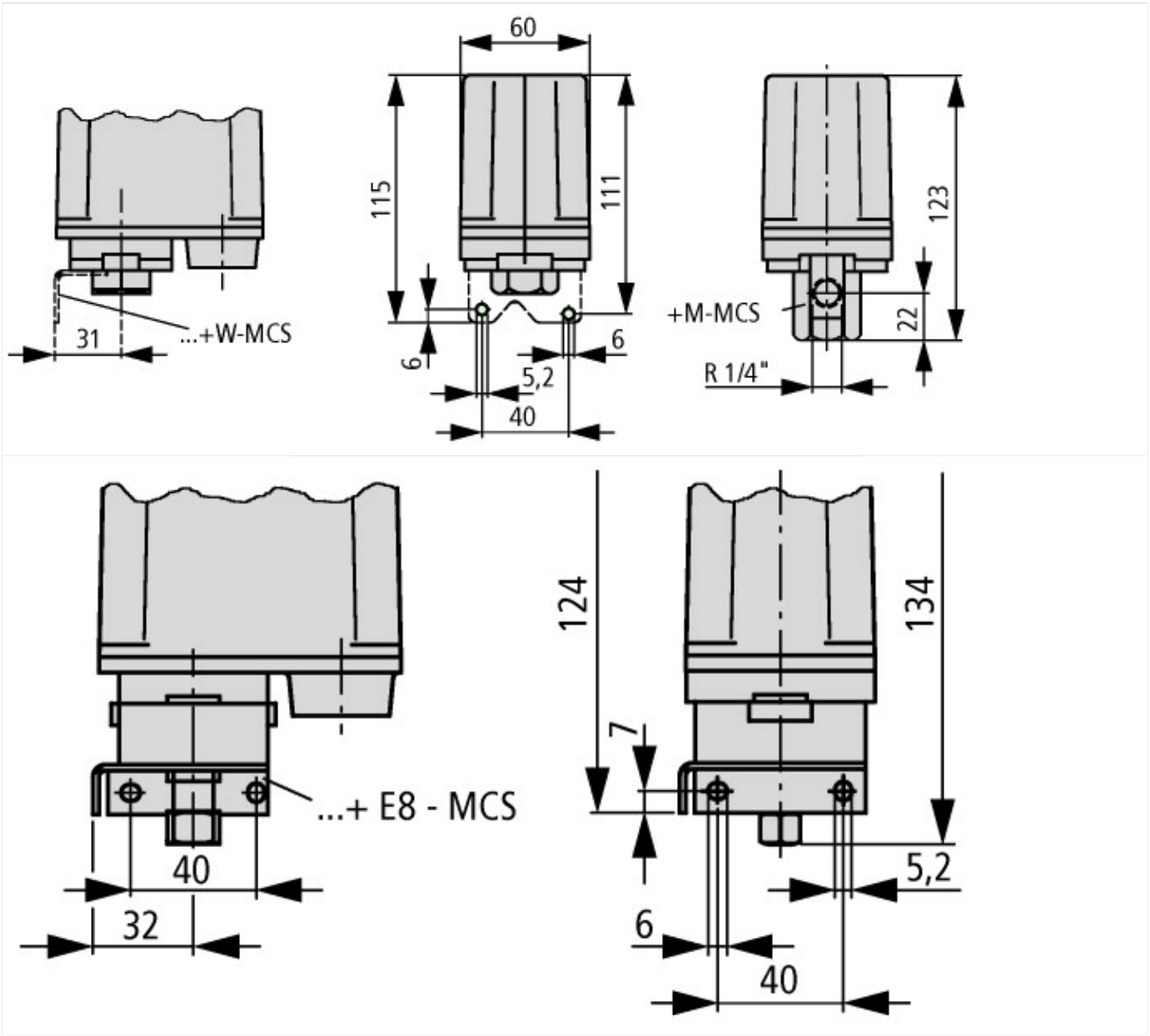

Additional product information (links)

IL05212001Z (AWA1320-0132) Pressure switch	
IL05212001Z (AWA1320-0132) Pressure switch	ftp://ftp.moeller.net/DOCUMENTATION/AWA_INSTRUCTIONS/IL05212001Z2014_06.pdf

© 11/2015 by Eaton Industries GmbH