

Paralleling mechanism

Part no. PN3-XPA
Article no. 283473

Powering Business Worldwide

Delivery programme

Description		Simultaneous actuation of 2 PN switch-disconnectors of the same type mounted side-by-side not UL/CSA approved
For use with		PN3(-4) + PN3(-4)

Notes

PN3

- 1 x rotary handle on switch (cannot be interlocked) supplied.
- 1 x door coupling rotary handle (cannot be interlocked) supplied.
- Not suitable for use as a main switch.

Notes

Extension shaft (-XV4(6)) additionally required for the door coupling rotary handle.

Cannot be combined with mechanical interlock, insulating surrounds, side wall operators or remote operators

For use as Emergency-Stop device

For this the door coupling rotary handle requires an exchange thumb-grip in red/yellow according to the following order nos.

- for PN1 and PN2: NZM2-XDGVR ⟶ 100747
- for PN3: NZM3-XDGVR ⟶ 100764; **Note:** The locking function of these thumb-grips must not be used.

Design verification as per IEC/EN 61439

IEC/EN 61439 design verification		
10.2 Strength of materials and parts		
10.2.2 Corrosion resistance		Meets the product standard's requirements.
10.2.3.1 Verification of thermal stability of enclosures		Meets the product standard's requirements.
10.2.3.2 Verification of resistance of insulating materials to normal heat		Meets the product standard's requirements.
10.2.3.3 Verification of resistance of insulating materials to abnormal heat and fire due to internal electric effects		Meets the product standard's requirements.
10.2.4 Resistance to ultra-violet (UV) radiation		Meets the product standard's requirements.
10.2.5 Lifting		Does not apply, since the entire switchgear needs to be evaluated.
10.2.6 Mechanical impact		Does not apply, since the entire switchgear needs to be evaluated.
10.2.7 Inscriptions		Meets the product standard's requirements.
10.3 Degree of protection of ASSEMBLIES		Does not apply, since the entire switchgear needs to be evaluated.
10.4 Clearances and creepage distances		Meets the product standard's requirements.
10.5 Protection against electric shock		Does not apply, since the entire switchgear needs to be evaluated.
10.6 Incorporation of switching devices and components		Does not apply, since the entire switchgear needs to be evaluated.
10.7 Internal electrical circuits and connections		Is the panel builder's responsibility.
10.8 Connections for external conductors		Is the panel builder's responsibility.
10.9 Insulation properties		
10.9.2 Power-frequency electric strength		Is the panel builder's responsibility.
10.9.3 Impulse withstand voltage		Is the panel builder's responsibility.
10.9.4 Testing of enclosures made of insulating material		Is the panel builder's responsibility.
10.10 Temperature rise		The panel builder is responsible for the temperature rise calculation. Eaton will provide heat dissipation data for the devices.
10.11 Short-circuit rating		Is the panel builder's responsibility. The specifications for the switchgear must be observed.
10.12 Electromagnetic compatibility		Is the panel builder's responsibility. The specifications for the switchgear must be observed.
10.13 Mechanical function		The device meets the requirements, provided the information in the instruction leaflet (IL) is observed.

Technical data ETIM 6.0

Low-voltage industrial components (EG000017) / Handle for power circuit breaker (EC000229)		
Electric engineering, automation, process control engineering / Low-voltage switch technology / Circuit breaker (LV < 1 kV) / Handle for switch devices (ecl@ss8.1-27-37-04-14 [AKF012011])		
Lockable		No

Colour		Black
Suitable for emergency stop		No
With axe		No
Suitable for power circuit breaker		Yes
Suitable for switch disconnector		Yes

Dimensions

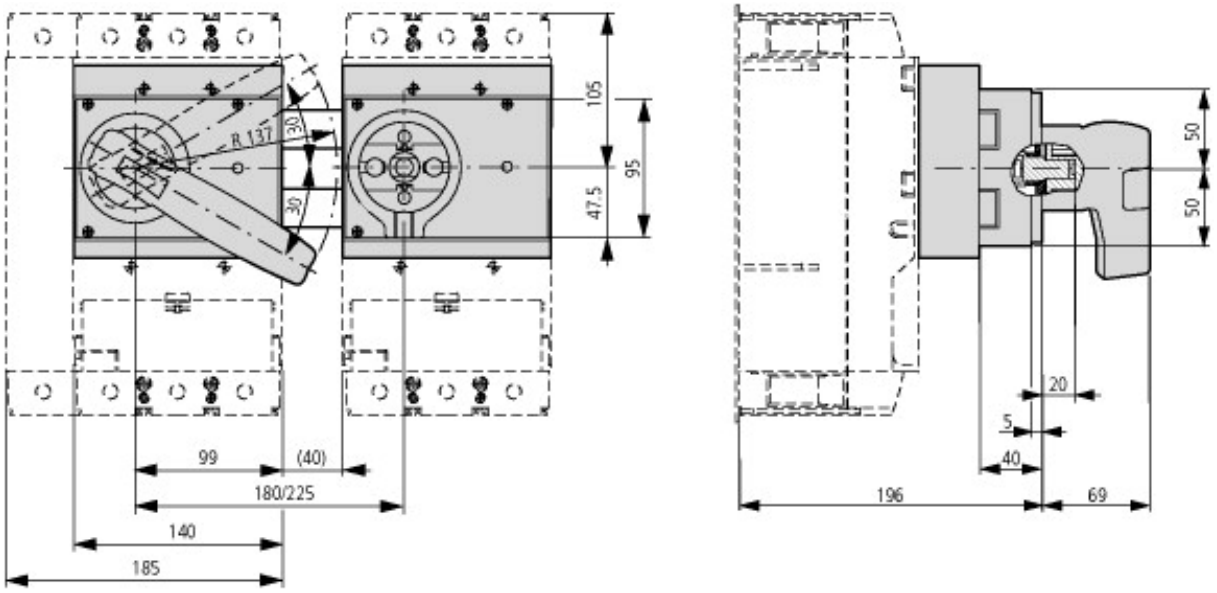

PN3-XPA + NZM3-XD

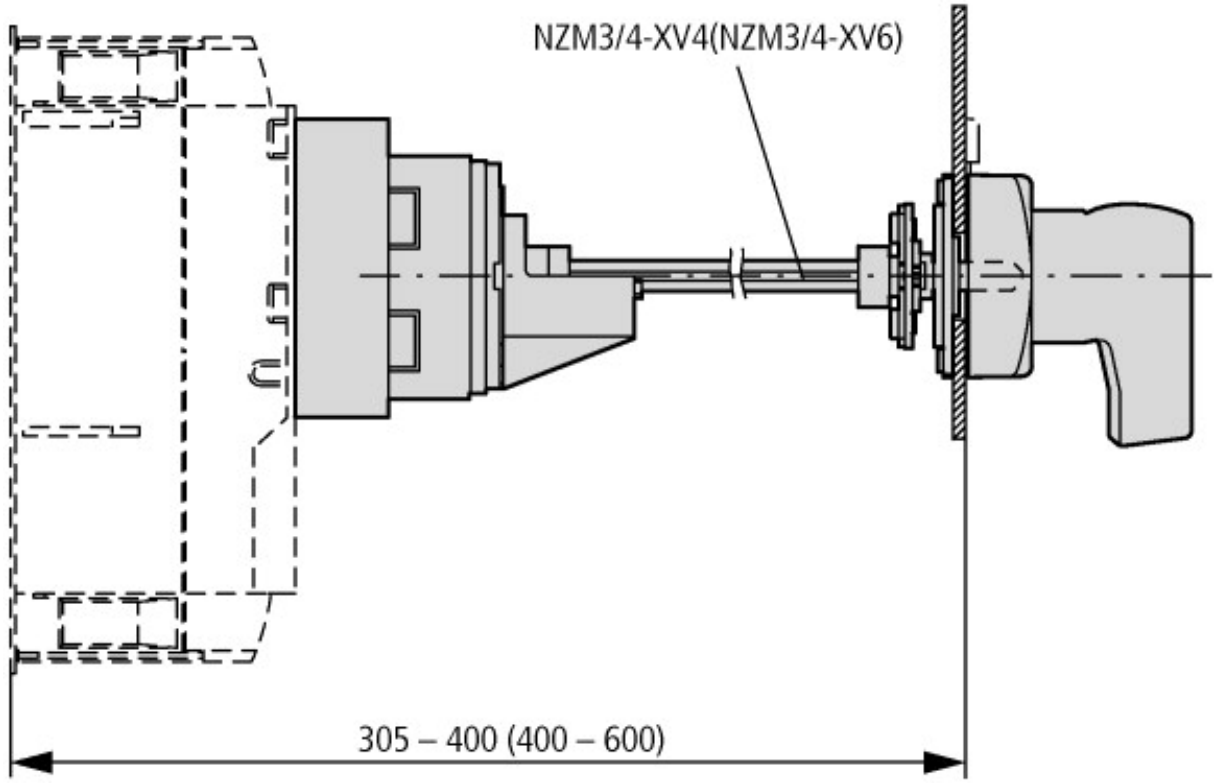

PN3-XPA + NZM3-XTD

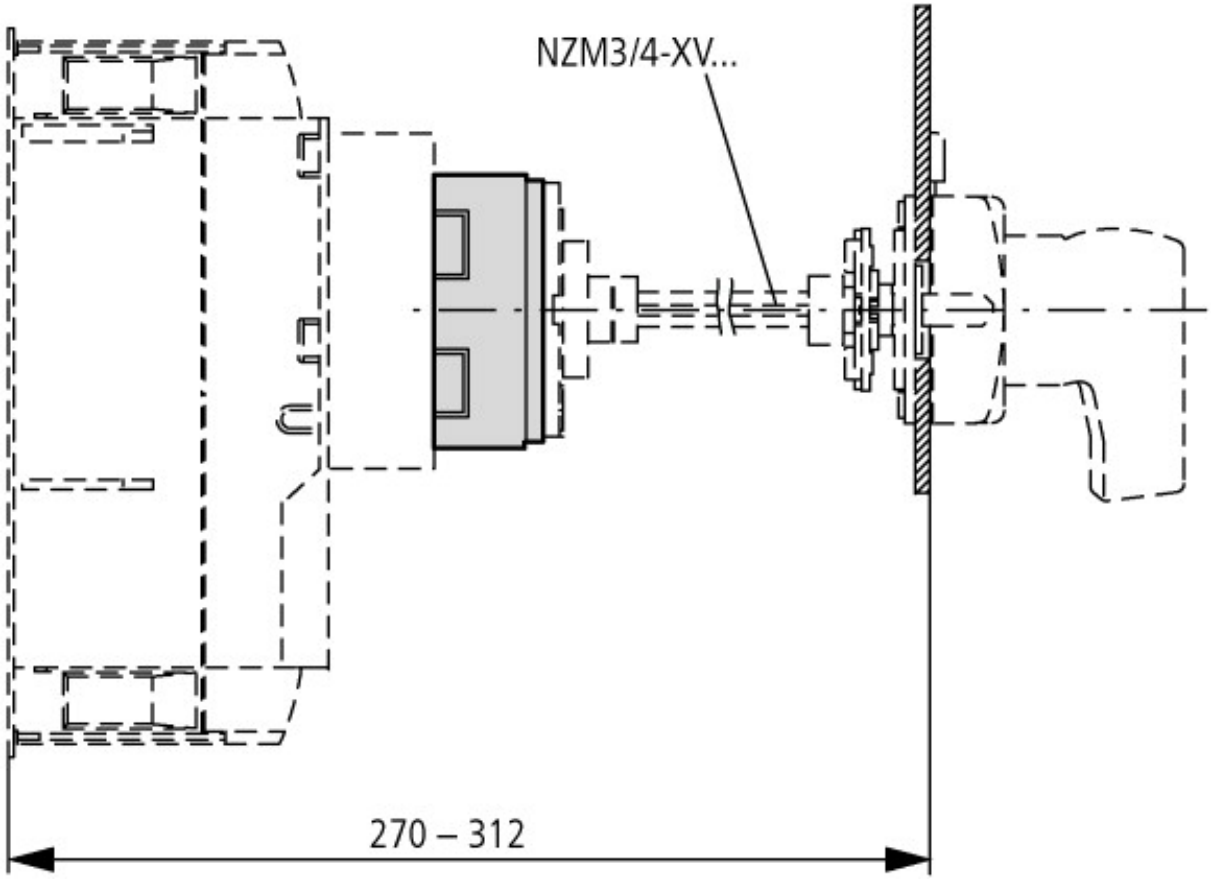

PN3-XPA + NZM3-XTD-60

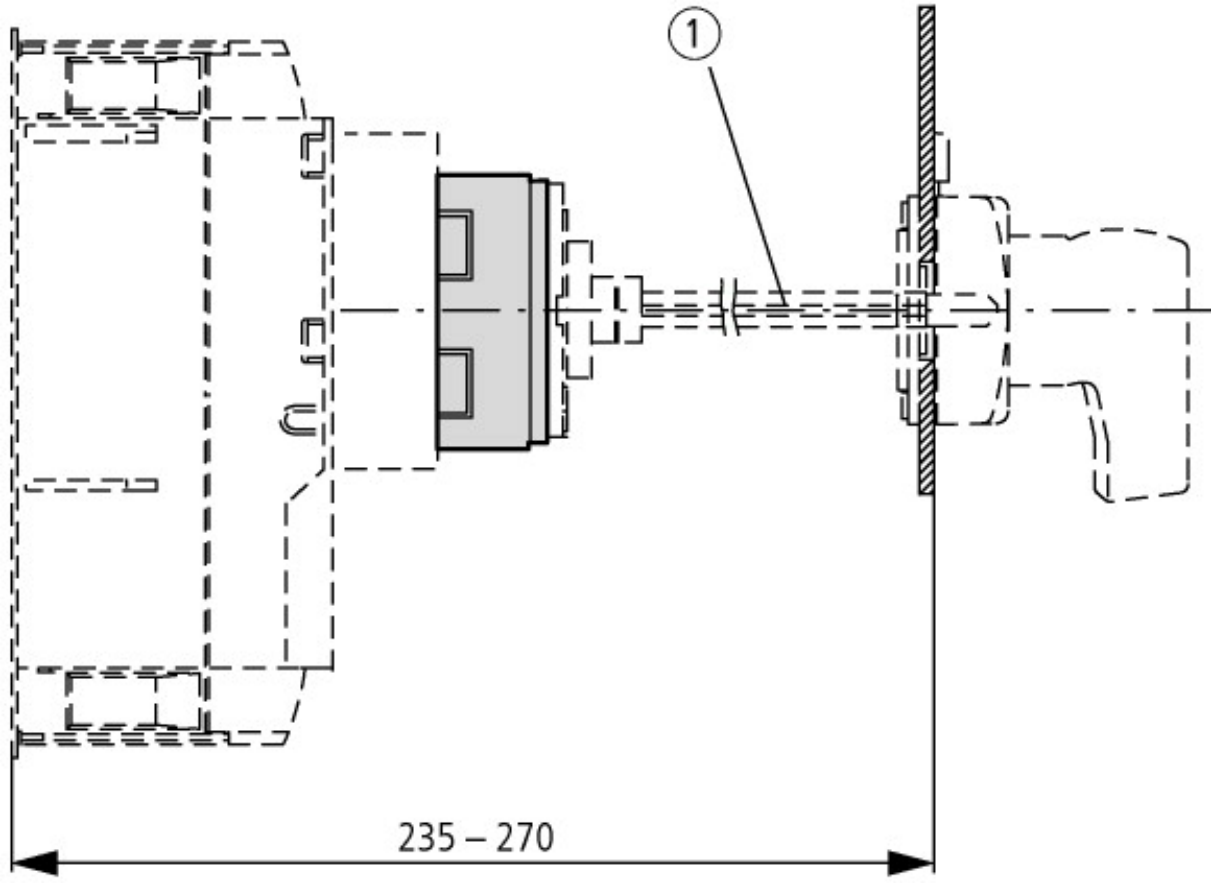

PN3-XPA + NZM3-XTD-0

① Special tip

Additional product information (links)

IL01219019Z (AWA1230-2154) Paralleling mechanism

IL01219019Z (AWA1230-2154) Paralleling mechanism	ftp://ftp.moeller.net/DOCUMENTATION/AWA_INSTRUCTIONS/IL01219019Z2011_02.pdf

© 11/2015 by Eaton Industries GmbH