Product data sheet
Characteristics

TM3AI8
module TM3 - 8 analog inputs



Main

Range of product	Modicon TM3
Product or component type	Analog input module
Range compatibility	Modicon M221 Modicon M241 Modicon M251
Analogue input number	8
Analogue input type	Voltage, analogue input range: - 10...10 V Voltage, analogue input range: 0...10 V Current, analogue input range: 0...20 mA Current, analogue input range: 4...20 mA

Complementary

Analogue input resolution	11 bits + sign 12 bits
Permissible continuous overload	40 mA current 13 V voltage
Input impedance	>= 1 MOhm voltage <= 50 Ohm current
LSB value	3.91 µA, analogue input: 4...20 mA current 4.88 µA, analogue input: 0...20 mA current 4.88 mV, analogue input: - 10...10 V voltage 2.44 mV, analogue input: 0...10 V voltage
Conversion time	1 ms + 1 ms per channel + 1 controller cycle time
Sampling duration	<= 1 ms
Absolute accuracy error	+/- 0.2 % of full scale at 25 °C +/- 1 % of full scale
Temperature drift	+/- 0.01 %FS/°C
Repeat accuracy	+/-0.5 %FS
Non-linearity	+/- 0.2 %FS
Cross talk	<= 1 LSB
[Us] rated supply voltage	24 V DC
Supply voltage limits	20.4...28.8 V
Type of cable	<= 30 m twisted shielded pairs cable for input circuit
Current consumption	40 mA at 24 V DC (full load) via external supply 30 mA at 24 V DC (no load) via external supply 35 mA at 5 V DC (no load) via bus connector 40 mA at 5 V DC (full load) via bus connector
Local signalling	1 LED green for PWR
Electrical connection	10 x 1.5 mm² removable screw terminal block with pitch 3.81 mm adjustment for inputs 10 x 1.5 mm² removable screw terminal block with pitch 3.81 mm adjustment for inputs and supply
Insulation	500 V AC between input and internal logic 1500 V AC between input and supply
Marking	CE
Surge withstand	1 kV for input with common mode protection conforming to EN/IEC 61000-4-5 0.5 kV for power supply with differential mode protection conforming to EN/IEC 61000-4-5 1 kV for power supply with common mode protection conforming to EN/IEC 61000-4-5

The information provided in this documentation contains general descriptions and/or technical characteristics of the performance of the products contained herein.
This documentation is not intended as a substitute for and is not to be used for determining suitability or reliability of these products for specific user applications.
It is the duty of any such user or integrator to perform the appropriate and complete risk analysis, evaluation and testing of the products with respect to the relevant specific application or use thereof.
Neither Schneider Electric Industries SAS nor any of its affiliates or subsidiaries shall be responsible or liable for misuse of the information contained herein.

Mounting support	Plate or panel with fixing kit Top hat type TH35-7.5 rail conforming to IEC 60715 Top hat type TH35-15 rail conforming to IEC 60715
Height	90 mm
Depth	70 mm
Width	23.6 mm
Product weight	0.11 kg

Environment

Standards	EN/IEC 61131-2 EN/IEC 61010-2-201
Resistance to electrostatic discharge	4 kV on contact conforming to EN/IEC 61000-4-2 8 kV in air conforming to EN/IEC 61000-4-2
Resistance to electromagnetic fields	1 V/m at 2 GHz...3 GHz conforming to EN/IEC 61000-4-3 3 V/m at 1.4 GHz...2 GHz conforming to EN/IEC 61000-4-3 10 V/m at 80 MHz...1 GHz conforming to EN/IEC 61000-4-3
Resistance to magnetic fields	30 A/m at 50...60 Hz conforming to EN/IEC 61000-4-8
Resistance to fast transients	1 kV I/O conforming to EN/IEC 61000-4-4
Resistance to conducted disturbances, induced by radio frequency fields	3 V at spot frequency (2, 3, 4, 6.2, 8.2, 12.6, 16.5, 18.8, 22, 25 MHz) conforming to Marine specification (LR, ABS, DNV, GL) 10 V at 0.15...80 MHz conforming to EN/IEC 61000-4-6
Electromagnetic emission	Radiated emissions, test level: 47 dBµV/m QP class A (10 m at 230 MHz...1 GHz) conforming to EN/IEC 55011 Radiated emissions, test level: 40 dBµV/m QP class A (10 m at 30...230 MHz) conforming to EN/IEC 55011
Immunity to microbreaks	10 ms
Ambient air temperature for operation	-10...35 °C (vertical installation) -10...55 °C (horizontal installation)
Ambient air temperature for storage	-25...70 °C
Relative humidity	10...95 % without condensation in storage 10...95 % without condensation in operation
IP degree of protection	IP20
Pollution degree	2
Operating altitude	0...2000 m
Storage altitude	0...3000 m
Vibration resistance	3 gn at 8.4...150 Hz with DIN rail mounting support 3.5 mm at 5...8.4 Hz with DIN rail mounting support
Shock resistance	15 gn during 11 ms

Offer Sustainability

Sustainable offer status	Green Premium product
RoHS (date code: YYWW)	Compliant - since 1415 - Schneider Electric declaration of conformity
REACh	Reference not containing SVHC above the threshold
Product environmental profile	Available Download Product Environmental
Product end of life instructions	Available Download End Of Life Manual

Dimensions Drawings

Dimensions

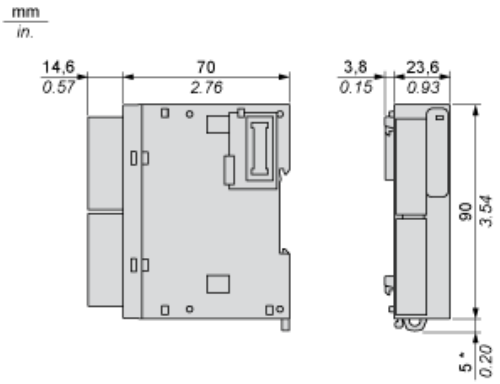

(*) 8.5 mm/0.33 in when the clamp is pulled out.

Spacing Requirements

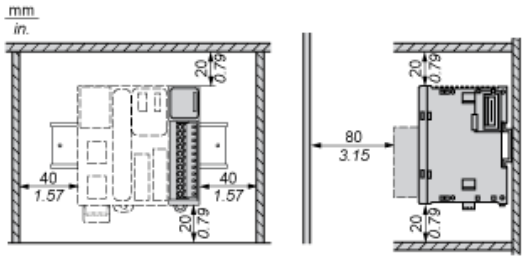

Mounting on a Rail

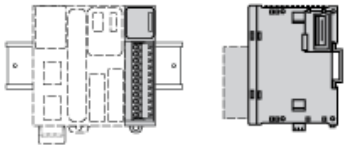

Incorrect Mounting



Mounting on a Panel Surface

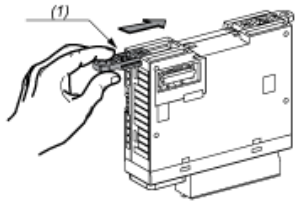

(1) Install a mounting strip

Mounting Hole Layout

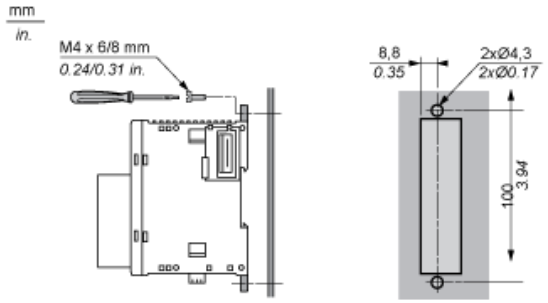

Analogue Input Module

Wiring Diagram (Current / Voltage)

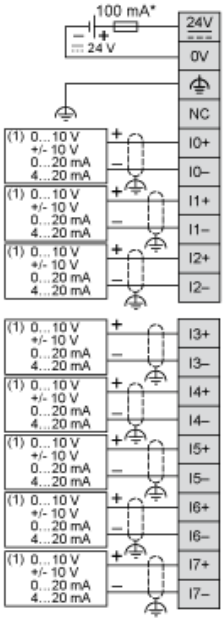

(*) Type T fuse
(1) Current/Voltage analog output device