

# Thermistor overload relay for machine protection, 1W , 24-240V50/60Hz, 24-240VDC, without reclosing lockout

**Part no.** EMT6
**Article no.** 066166
**Catalog No.** EMT6

Powering Business Worldwide

## Delivery programme

| | | | |
|---|---|---|---|
| Product range | | | EMT6 thermistor overload relay for machine protection |
| Function | | | Without automatic reset<br>Mains and fault LED display<br>Test button |
| **Rated operational current** | | | |
| AC-15 | | | |
| 240 V | $I_e$ | A | 3 |
| AC--14 | | | |
| 300 V | $I_e$ | A | 3 |
| 400 V | $I_e$ | A | 3 |
| | | | Wert gilt ab Release 001. |
| conventional thermal current | $I_{th}$ | A | 6 |
| Rated control voltage | $U_s$ | V | 24 - 240 V 50 - 400 Hz<br>24 - 240 V DC |

**Notes**

Observe manual MN03407006Z-DE/EN.

Can be snap fitted on a top-hat rail to IEC/EN 60715.

## Technical data

### General

| | | | |
|---|---|---|---|
| Standards | | | IEC/EN 60947, VDE 0660, EN 55011 |
| Climatic proofing | | | Damp heat, constant, to IEC 60068-2-78; Damp heat, cyclic, to IEC 60068-2-30 |
| Ambient temperature | | | |
| Open | | °C | -25 - +60 |
| Enclosed | | °C | - 25 - 45 |
| Storage | | °C | - 45 - 85 |
| Mounting position | | | As required |
| Weight | | kg | 0.15 |
| Mechanical shock resistance half-sinusoidal shock 10 ms to IEC 60068-2-27 | | g | 10 |
| Degree of Protection | | | IP20 |
| Protection against direct contact when actuated from front (EN 50274) | | | Finger and back-of-hand proof |
| Safe isolation to EN 61140 | | | |
| between the contacts | | V AC | 250 |
| between contacts and power supply | | V AC | 250 |

### Auxiliary and control circuits

| | | | |
|---|---|---|---|
| Rated impulse withstand voltage | $U_{imp}$ | V AC | 4000 |
| Rated impulse withstand voltage | $U_{imp}$ | V AC | 6000 |
| | | | Wert gilt ab Release 001. |
| Overvoltage category/pollution degree | | | III/3 |
| Terminal capacities Auxiliary and control circuits | | | |
| Solid | | $mm^2$ | 1 x (0.5 - 2.5)<br>2 x (0.5 - 1.5) |
| Flexible with ferrule | | $mm^2$ | 1 x (0.5 - 2.5)<br>2 x (0.5 - 1.5) |
| Solid or stranded | | AWG | 20 - 14 |
| Terminal screw | | | M3.5 |
| Tightening torque | | Nm | 1.2 |

| | | | |
|---|---|---|---|
| Tools | | | |
| Pozidriv screwdriver | | Size | 2 |
| Standard screwdriver | | mm | 1 x 6 |

## Auxiliary power circuit

| | | | |
|---|---|---|---|
| Rated insulation voltage | $U_i$ | V | 300 |
| Rated insulation voltage | $U_i$ | V | 400 |
| | | | Wert gilt ab Release 001. |
| Rated operational current | $I_e$ | A | |
| AC--14 | | | |
| Make contact | | | |
| 300 V | $I_e$ | A | 3 |
| 380 V 400 V 415 V | $I_e$ | A | 3 |
| | | | Wert gilt ab Release 001. |
| Break contact | | | |
| 300 V | $I_e$ | A | 3 |
| 380 V 400 V 415 V | $I_e$ | A | 3 |
| | | | Wert gilt ab Release 001. |
| AC-15 | | | |
| Make contact | | | |
| 220 V 230 V 240 V | $I_e$ | A | 3 |
| 300 V | $I_e$ | A | 1 |
| 380 V 400 V 415 V | $I_e$ | A | 1 |
| | | | Wert gilt ab Release 001. |
| Break contact | | | |
| 220 V 230 V 240 V | $I_e$ | A | 3 |
| 300 V | $I_e$ | A | 1 |
| 380 V 400 V 415 V | $I_e$ | A | 1 |
| | | | Wert gilt ab Release 001. |
| Max. short-circuit protective device | | | |
| Fuse | gG/gL | A | 6 |

## Control circuit

| | | | |
|---|---|---|---|
| Rated insulation voltage | $U_i$ | V | 240 |
| Rated operational voltage | $U_e$ | V | 240 |
| Pick-up and drop-out values | | x $U_e$ | 0.85 - 1.1 |
| Power consumption | | | |
| AC | | VA | 3.5 |
| DC | | W | 2 |
| Trip at approx. | | Ω | 3600 |
| Recovery at approx. | | Ω | 1600 |

## Electromagnetic compatibility (EMC)

| | | | |
|---|---|---|---|
| Electrostatic discharge (ESD) | | | |
| applied standard | | | IEC/EN 61000-4-2 |
| Air discharge | | kV | 8 |
| Contact discharge | | kV | 6 |
| Electromagnetic fields (RFI) | | | |
| applied standard | | | IEC/EN 61000-4-3 |
| | | V/m | 80 - 1000 MHz: 10<br>1.4 - 2 GHz: 3<br>2.0 - 2.7 GHz: 1 |
| Radio interference suppression | | | EN 55011<br>Class B |
| Burst | | kV | Supply cables: 2<br>Signal cables: 1<br>according to IEC/EN 61000-4-4 |
| power pulses (Surge) | | | 2 kV (symmetrical)<br>4 kV (asymmetrical)<br>according to IEC/EN 61000-4-5 |
| Immunity to line-conducted interference to (IEC/EN 61000-4-6) | | V | 10 |

## Design verification as per IEC/EN 61439

| | | |
|---|---|---|
| Technical data for design verification | | |
| Operating ambient temperature min. | °C | -25 |
| Operating ambient temperature max. | °C | 60 |

## Technical data ETIM 6.0

| | | |
|---|---|---|
| Relays (EG000019) / Temperature monitoring relay (EC001446) | | |
| Electric engineering, automation, process control engineering / Low-voltage switch technology / Monitoring equipment (low-voltage switch technology) / Temperature monitoring equipment (ecl@ss8.1-27-37-18-10 [AKF104011]) | | |
| Type of electric connection | | Screw connection |
| Rated control supply voltage Us at AC 50HZ | V | 24 - 240 |
| Rated control supply voltage Us at AC 60HZ | V | 24 - 240 |
| Rated control supply voltage Us at DC | V | 24 - 240 |
| Voltage type for actuating | | AC/DC |
| With detachable clamps | | No |
| Number of measuring circuits | | 1 |
| Error registration possible | | No |
| External reset possible | | No |
| Number of contacts as normally closed contact | | 1 |
| Number of contacts as normally open contact | | 1 |
| Number of contacts as change-over contact | | 0 |
| Width | mm | 23 |
| Height | mm | 84 |
| Depth | mm | 104 |

## Approvals

| | | |
|---|---|---|
| Product Standards | | UL 508; CSA-C22.2 No. 14; IEC/EN 60947-8; CE marking |
| UL File No. | | E29184 |
| UL Category Control No. | | NKCR |
| CSA File No. | | 12528 |
| CSA Class No. | | 3211-03 |
| North America Certification | | UL listed, CSA certified |
| Specially designed for North America | | No |
| Max. Voltage Rating | | 600 V AC |
| Degree of Protection | | IEC: IP20, UL/CSA Type: - |

## Characteristics

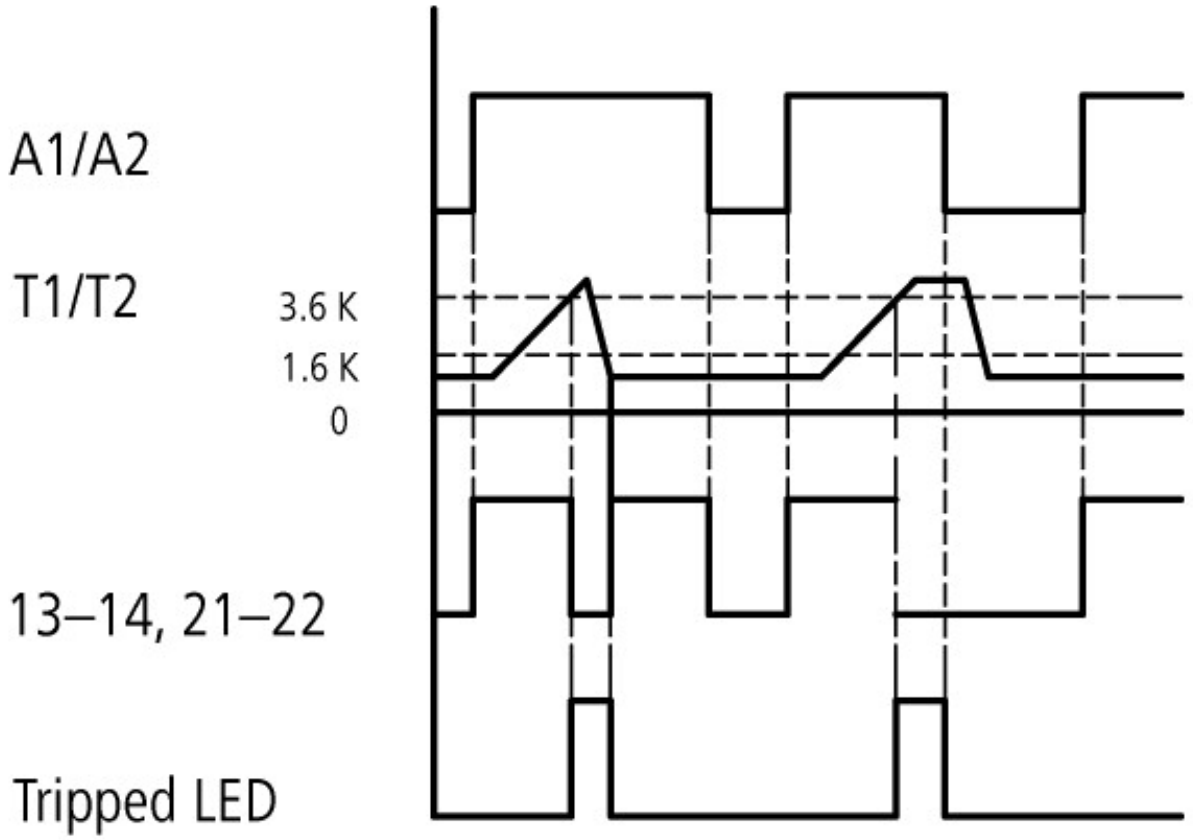


## Dimensions

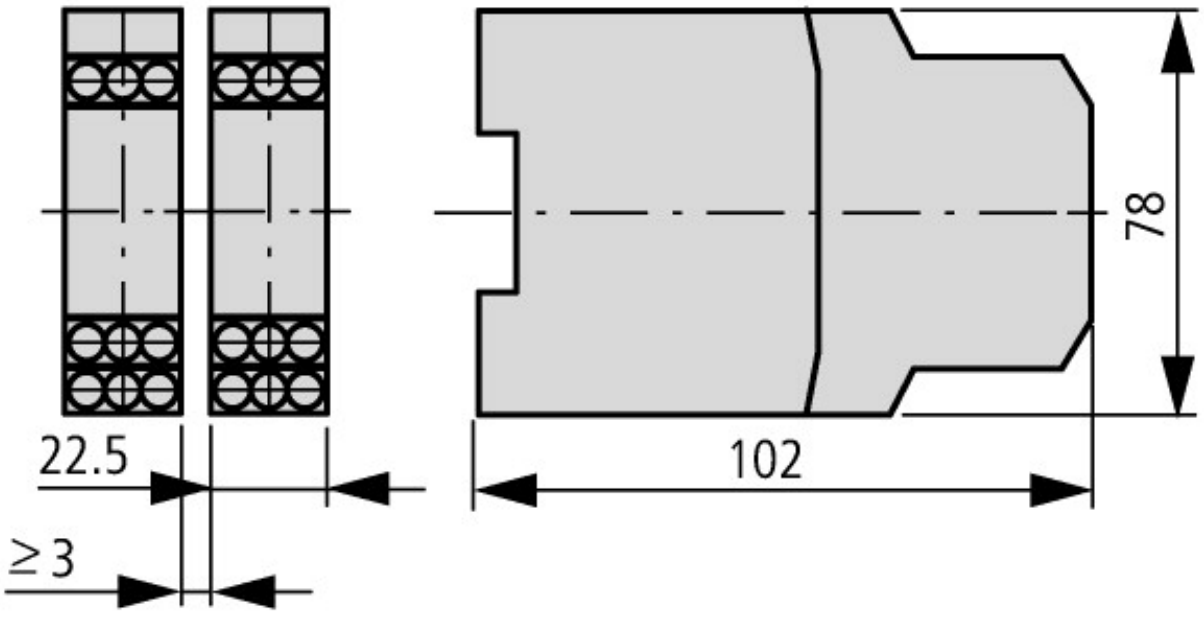

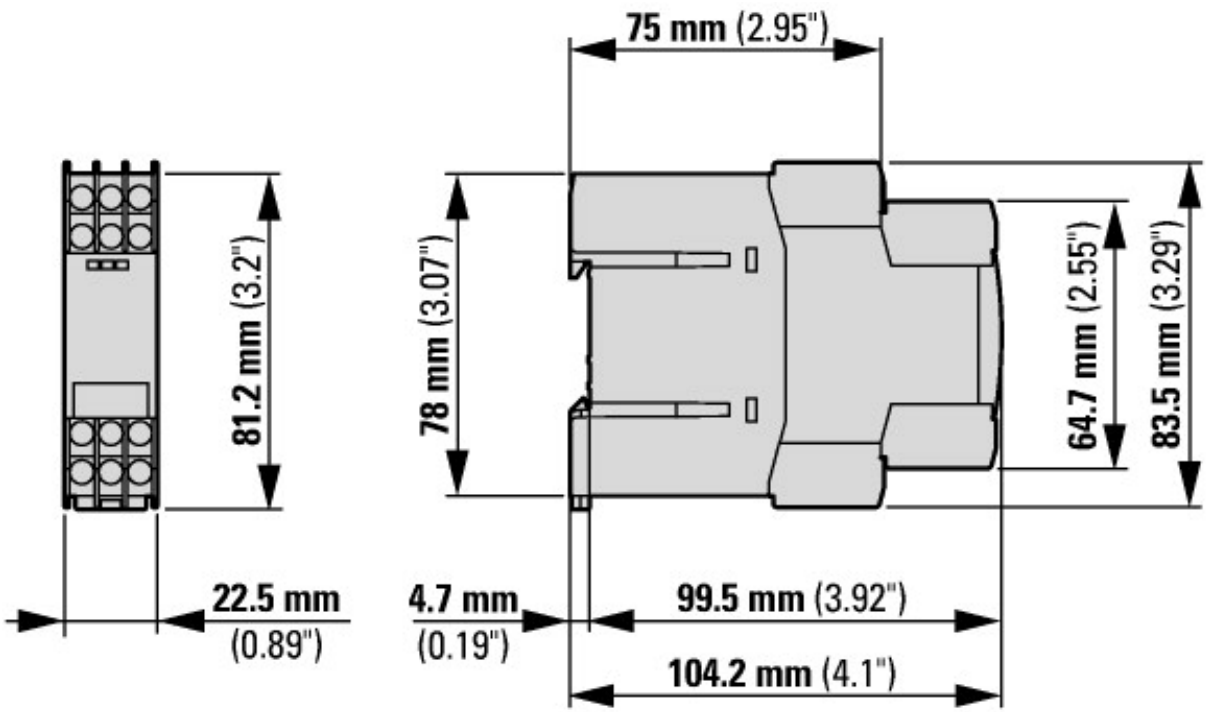


Applies to release 001 and higher

## Additional product information (links)

| | |
|---|---|
| **IL03407100Z (AWA2327-1454) thermistor overload relay for machine protection** | |
| IL03407100Z (AWA2327-1454) thermistor overload relay for machine protection | ftp://ftp.moeller.net/DOCUMENTATION/AWA_INSTRUCTIONS/IL03407100Z2014_11.pdf |
| **MN03407006Z (AWB2327-1446) EMT6 machine protection relays - overload monitoring for machines in Ex e areas** | |
| MN03407006Z (AWB2327-1446) EMT6 machine protection relays - overload monitoring for machines in Ex e areas - English | ftp://ftp.moeller.net/DOCUMENTATION/AWB_MANUALS/MN03407006Z_DEEN.pdf |
| terminal markings and sensor circuit | http://de.ecat.moeller.net/flip-cat/?edition=HPLTEv1&startpage=6.21 |


© 11/2015 by Eaton Industries GmbH