Data sheet

Order number: 203-TLS

TLS plug Multi-Grip cable gland

EAN/pcs	**4024941192286**
Ampere	**16A**
Poles	**5p (3p+N+PE)**
Earth 'Clock' Position	**6 h**
Voltage	**200/346 up to 240/415V**
Frequency	**50 and 60Hz**
Protection	**IP44**
Color code	**red RAL 3000**
Connection Design	**screw terminal**
Contact	**contact carrier made of polyamide, the contacts are brass**
Weight/pcs	**0,150 kg**
Packaging unit	**10 pc/pcs**
Material of enclosure	**Polyamide**

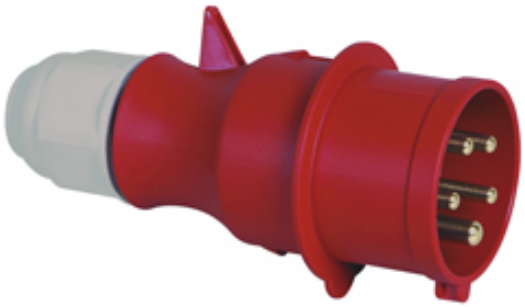

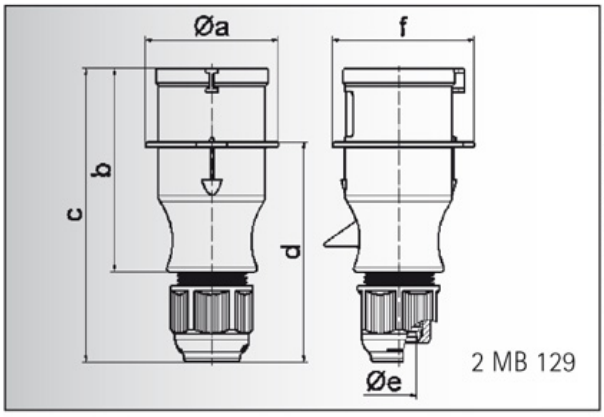

Ampere	16	16	16	32	32	32
Polzahl	3	4	5	3	4	5
a ø	54,0	60,0	66,0	71,0	71,0	80,0
b	94,5	98,0	101,0	115,0	115,0	119,0
c	138,0	142,0	145,0	170,0	170,0	174,0
d	101,5	105,5	108,5	124,0	124,0	128,0
e ø	18,0	18,0	18,0	23,0	23,0	23,0
f	56,6	64,0	71,0	76,0	76,0	85,0
Leiter mm² min	1	1	1	2,5	2,5	2,5
Leiter mm² max	2,5	2,5	2,5	6	6	6

Bals Elektrotechnik GmbH & Co. KG
D-57399 Kirchhundem - Albaum
phone: +49(0)2723/771-0 fax: +49(0)2723/771-177
email: info@bals.com www.bals.com

date: 08.12.2015