

# Switch-disconnector 4p 125A BG1

**Part no.** N1-4-125
**Article no.** 266004

Powering Business Worldwide

Similar to illustration

## Delivery programme

| | | | |
|---|---|---|---|
| Product range | | | Switch-disconnectors |
| Protective function | | | Disconnectors/main switches |
| Standard/Approval | | | IEC |
| Installation type | | | Fixed |
| Construction size | | | N1 |
| Description | | | Main switch characteristics including positive drive to IEC/EN 60204 and VDE 0113.<br>Isolating characteristics to IEC/EN 60947-3 and VDE 0660.<br>Busbar tag shroud to VDE 0160 Part 100. |
| Number of poles | | | 4 pole |
| Standard equipment | | | Box terminal |
| Switch positions | | | I, +, 0 |
| Rated current = rated uninterrupted current | $I_n = I_u$ | A | 125 |
| Short-circuit protection max. fuse gL-characteristic | | A gL | 125 |

## Technical data

### Switch-disconnectors

| | | | |
|---|---|---|---|
| Rated surge voltage invariability | $U_{imp}$ | | |
| Main contacts | | V | 6000 |
| Auxiliary contacts | | V | 6000 |
| Rated operational voltage | Ue | V AC | 690 |
| Rated current = rated uninterrupted current | $I_n = I_u$ | A | 125 |
| Overvoltage category/pollution degree | | | III/3 |
| Rated insulation voltage | $U_i$ | V | 690 |
| Use in unearthed supply systems | | V | 690 |
| | | | Rated operating voltage: 40-60 Hz |
| Other technical data (sheet catalogue) | | | Weight<br>Temperature dependency, Derating<br>Effective power loss |

### Rated short-circuit making capacity

| | | | |
|---|---|---|---|
| 690 V 50/60 H | Ic | kA | 2.8 |

### Rated short-time withstand current

| | | | |
|---|---|---|---|
| t = 0.3 s | $I_{cw}$ | kA | 2 |
| t = 1 s | $I_{cw}$ | kA | 2 |

### Rated conditional short-circuit current

| | | | |
|---|---|---|---|
| With back-up fuse | | A gG/gL | PN1(N1)-63…125: 125<br>PN1(N1)-160: 160 |
| 400 … 415 V | | kA | 100 |
| 690 V | | kA | 80 |
| With downstream fuse | | A gG/gL | PN1(N1)-63…125: 125<br>PN1(N1)-160: 160 |
| 400 … 415 V | | kA | 100 |
| 690 V | | kA | 10 |

### Rated making and breaking capacity

| | | | |
|---|---|---|---|
| Rated operational current | $I_e$ | A | |
| 415 V | $I_e$ | A | 160 |
| 690 V | $I_e$ | A | 160 |
| 415 V | $I_e$ | A | 160 |
| 690 V | $I_e$ | A | 160 |

| | | | |
|---|---|---|---|
| Lifespan, mechanical | Operations | | 20000 |
| Max. operating frequency | | Ops/h | 120 |

## Lifespan, electrical

| | | | |
|---|---|---|---|
| 400 V 50/60 Hz | Operations | | 10000 |
| 415 V 50/60 Hz | Operations | | 10000 |
| 690 V 50/60 Hz | Operations | | 7500 |
| 400 V 50/60 Hz | Operations | | 7500 |
| 415 V 50/60 Hz | Operations | | 7500 |
| 690 V 50/60 Hz | Operations | | 5000 |
| | | | For current heat loss per pole the specification refers to the maximum rated operational current of the frame size. |
| Current heat losses per pole at $I_u$ are based on the maximum rated operational current of the frame size. | | W | 12.7 |
| | | | For current heat loss per pole the specification refers to the maximum rated operational current of the frame size. |

## Terminal capacity

| | | | |
|---|---|---|---|
| Standard equipment | | | Box terminal |
| Copper conductors and cables | | | |
| Box terminal | | | |
| Solid | | $mm^2$ | 1 x (10 - 16)<br>2 x (6 - 16) |
| Stranded | | $mm^2$ | 1 x (10 - 70) [3]<br>2 x (6 - 25) |
| | | | [3] Up to 95 $mm^2$ can be connected depending on the cable manufacturer. |
| Tunnel terminal | | | |
| Solid | | $mm^2$ | 1 x 16 |
| Stranded | | $mm^2$ | |
| 1-hole | | | 1 x (25 - 95) |
| Bolt terminal and rear-side connection | | | |
| Direct on the switch | | | |
| Solid | | $mm^2$ | 1 x (10 - 16)<br>2 x (6 - 16) |
| Stranded | | $mm^2$ | 1 x (25 - 70) [3]<br>2 x 25 |
| | | | [3] Up to 95 $mm^2$ can be connected depending on the cable manufacturer. |
| Al conductors, Al cable | | | |
| | | | |
| Solid | | $mm^2$ | 1 x 16 |
| Stranded | | $mm^2$ | |
| 1-hole | | | 1 x (25 - 95) |
| Bolt terminal and rear-side connection | | | |
| Direct on the switch | | | |
| Solid | | $mm^2$ | 1 x (10 - 16)<br>2 x (10 - 16) |
| Stranded | | $mm^2$ | 1 x (25 - 70) [3]<br>2 x 25 |
| Cu strip (number of segments x width x segment thickness) | | | |
| Box terminal | | | |
| | min. | mm | 2 x 9 x 0.8 |
| | max. | mm | 9 x 9 x 0.8 |
| Copper busbar (width x thickness) | mm | | |
| Bolt terminal and rear-side connection | | | |
| Screw connection | | | M6 |
| Direct on the switch | | | |
| | min. | mm | 12 x 5 |
| | max. | mm | 16 x 5 |

## Design verification as per IEC/EN 61439

| | | | |
|---|---|---|---|
| Technical data for design verification | | | |
| Rated operational current for specified heat dissipation | $I_n$ | A | 125 |
| Equipment heat dissipation, current-dependent | $P_{vid}$ | W | 17.81 |
| Operating ambient temperature min. | | °C | -25 |
| Operating ambient temperature max. | | °C | 70 |
| IEC/EN 61439 design verification | | | |
| 10.2 Strength of materials and parts | | | |
| 10.2.2 Corrosion resistance | | | Meets the product standard's requirements. |
| 10.2.3.1 Verification of thermal stability of enclosures | | | Meets the product standard's requirements. |
| 10.2.3.2 Verification of resistance of insulating materials to normal heat | | | Meets the product standard's requirements. |
| 10.2.3.3 Verification of resistance of insulating materials to abnormal heat and fire due to internal electric effects | | | Meets the product standard's requirements. |
| 10.2.4 Resistance to ultra-violet (UV) radiation | | | Meets the product standard's requirements. |
| 10.2.5 Lifting | | | Does not apply, since the entire switchgear needs to be evaluated. |
| 10.2.6 Mechanical impact | | | Does not apply, since the entire switchgear needs to be evaluated. |
| 10.2.7 Inscriptions | | | Meets the product standard's requirements. |
| 10.3 Degree of protection of ASSEMBLIES | | | Does not apply, since the entire switchgear needs to be evaluated. |
| 10.4 Clearances and creepage distances | | | Meets the product standard's requirements. |
| 10.5 Protection against electric shock | | | Does not apply, since the entire switchgear needs to be evaluated. |
| 10.6 Incorporation of switching devices and components | | | Does not apply, since the entire switchgear needs to be evaluated. |
| 10.7 Internal electrical circuits and connections | | | Is the panel builder's responsibility. |
| 10.8 Connections for external conductors | | | Is the panel builder's responsibility. |
| 10.9 Insulation properties | | | |
| 10.9.2 Power-frequency electric strength | | | Is the panel builder's responsibility. |
| 10.9.3 Impulse withstand voltage | | | Is the panel builder's responsibility. |
| 10.9.4 Testing of enclosures made of insulating material | | | Is the panel builder's responsibility. |
| 10.10 Temperature rise | | | The panel builder is responsible for the temperature rise calculation. Eaton will provide heat dissipation data for the devices. |
| 10.11 Short-circuit rating | | | Is the panel builder's responsibility. The specifications for the switchgear must be observed. |
| 10.12 Electromagnetic compatibility | | | Is the panel builder's responsibility. The specifications for the switchgear must be observed. |
| 10.13 Mechanical function | | | The device meets the requirements, provided the information in the instruction leaflet (IL) is observed. |

## Technical data ETIM 6.0

| | | | |
|---|---|---|---|
| Low-voltage industrial components (EG000017) / Switch disconnector (EC000216) | | | |
| Electric engineering, automation, process control engineering / Low-voltage switch technology / Off-load switch, circuit breaker, control switch / Switch disconnector (ecl@ss8.1-27-37-14-03 [AKF060010]) | | | |
| Version as main switch | | | Yes |
| Version as maintenance-/service switch | | | Yes |
| Version as safety switch | | | No |
| Version as emergency stop installation | | | Yes |
| Version as reversing switch | | | No |
| Max. rated operation voltage Ue AC | | V | 690 |
| Rated operating voltage | | V | 690 - 690 |
| Rated permanent current Iu | | A | 125 |
| Rated permanent current at AC-21, 400 V | | A | 0 |
| Rated operation power at AC-3, 400 V | | kW | 0 |
| Rated short-time withstand current Icw | | kA | 2 |
| Rated operation power at AC-23, 400 V | | kW | 55 |
| Switching power at 400 V | | kW | 0 |
| Conditioned rated short-circuit current Iq | | kA | 100 |
| Number of poles | | | 4 |
| Number of auxiliary contacts as normally closed contact | | | 0 |
| Number of auxiliary contacts as normally open contact | | | 0 |

| | |
|---|---|
| Number of auxiliary contacts as change-over contact | 0 |
| Motor drive optional | Yes |
| Motor drive integrated | No |
| Voltage release optional | Yes |
| Device construction | Built-in device fixed built-in technique |
| Suitable for ground mounting | Yes |
| Suitable for front mounting 4-hole | No |
| Suitable for front mounting center | No |
| Suitable for distribution board installation | Yes |
| Suitable for intermediate mounting | Yes |
| Colour control element | Black |
| Type of control element | Rocker lever |
| Interlockable | Yes |
| Type of electrical connection of main circuit | Frame clamp |
| Degree of protection (IP), front side | IP20 |

## Dimensions

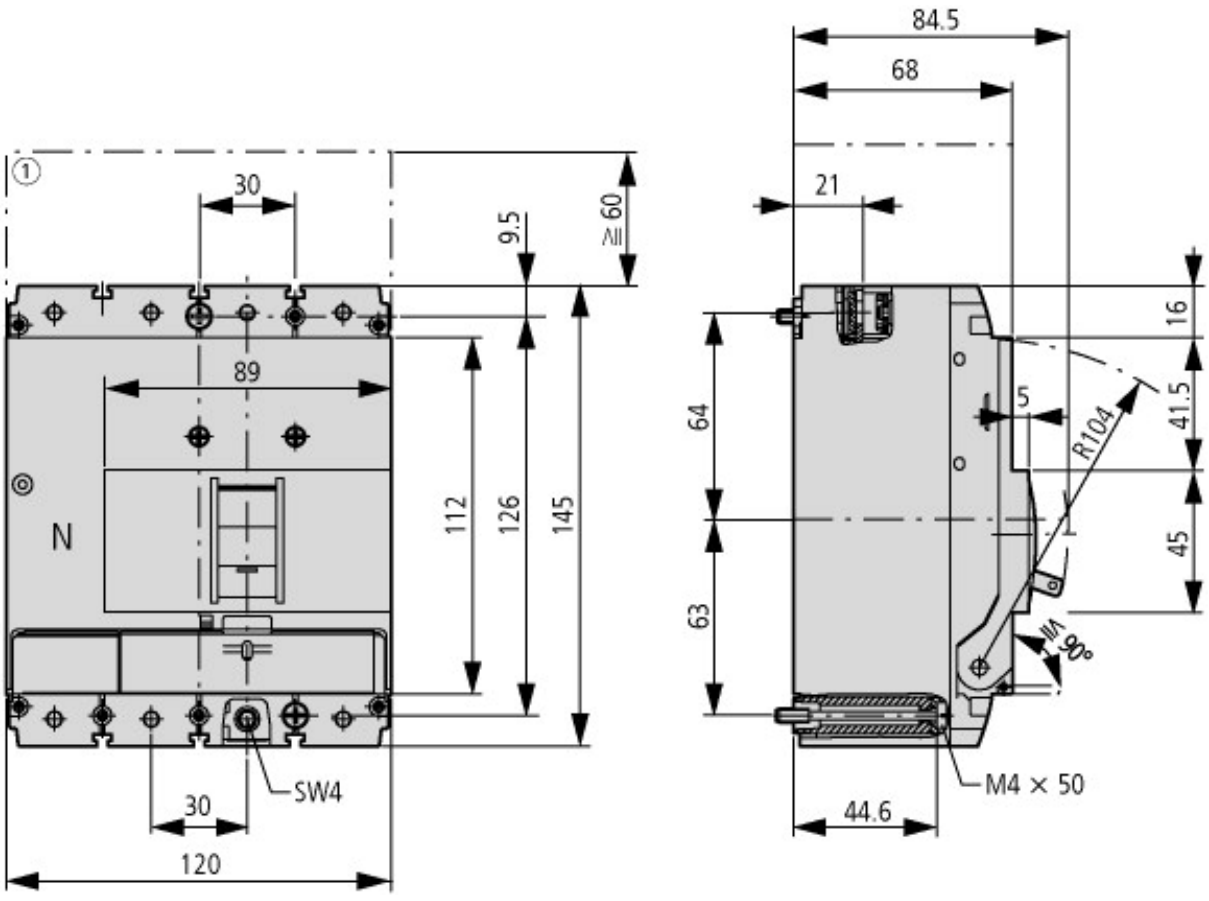


① Blow out area, minimum clearance to adjacent parts

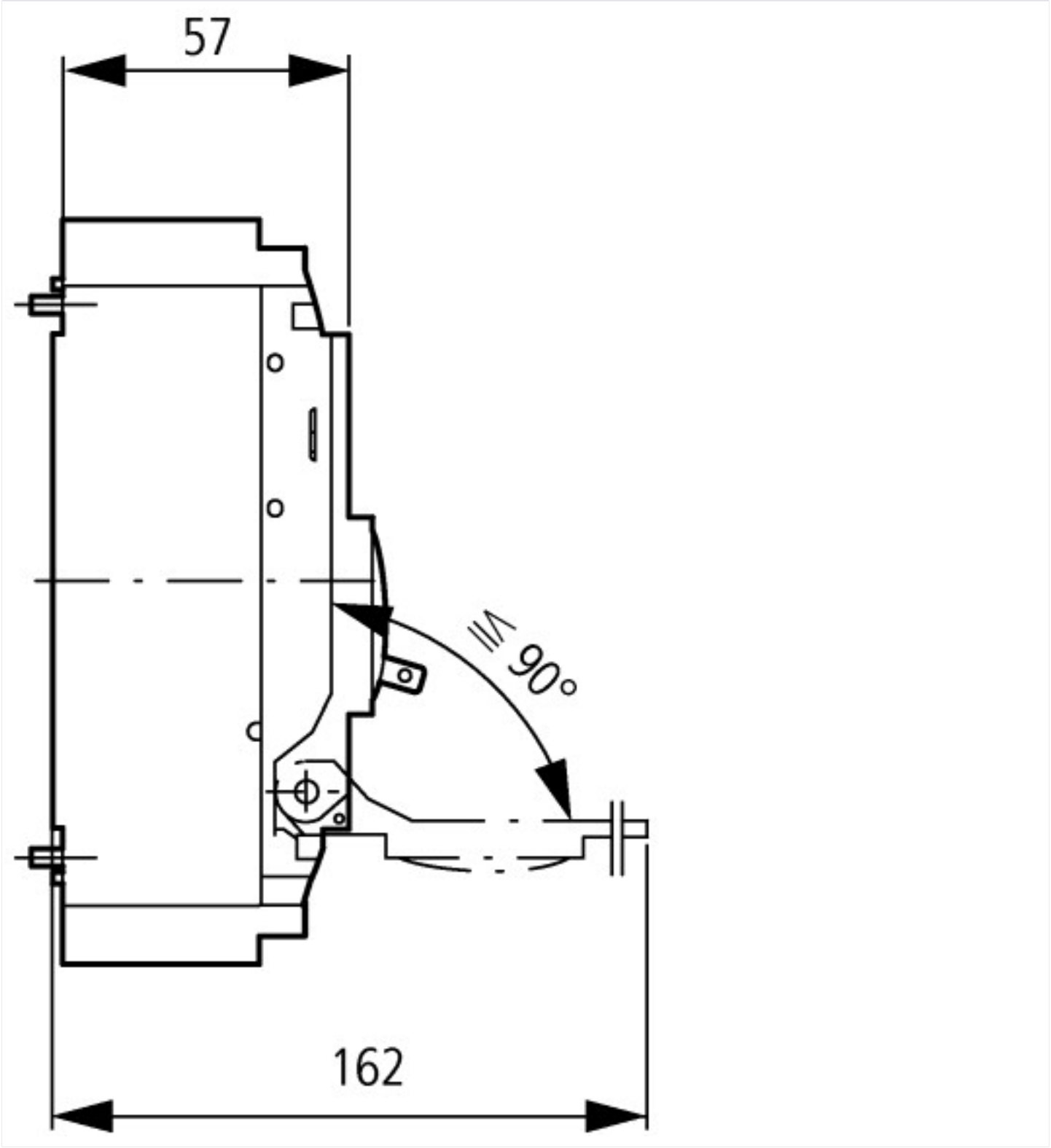


## Additional product information (links)

| IL01203004Z (AWA1230-1913) Circuit-breaker, Switch-Disconnector | |
|---|---|
| IL01203004Z (AWA1230-1913) Circuit-breaker, Switch-Disconnector | ftp://ftp.moeller.net/DOCUMENTATION/AWA_INSTRUCTIONS/IL01203004Z2015_11.pdf |
| Weight | http://ecat.moeller.net/flip-cat/?edition=HPLEN&startpage=17.171 |
| Temperature dependency, Derating | http://ecat.moeller.net/flip-cat/?edition=HPLEN&startpage=17.172 |
| Effective power loss | http://ecat.moeller.net/flip-cat/?edition=HPLEN&startpage=17.174 |


© 12/2015 by Eaton Industries GmbH