Data sheet

Order number: 304-TLS

TLS connector Multi-Grip cable gland

EAN/pcs	**4024941192309**
Ampere	**32A**
Poles	**5p (3p+N+PE)**
Earth 'Clock' Position	**6 h**
Voltage	**200/346 up to 240/415V**
Frequency	**50 and 60Hz**
Protection	**IP44**
Color code	**red RAL 3000**
Connection Design	**screw terminal**
Contact	**contact carrier made of polyamide, the contacts are brass**
Weight/pcs	**0,260 kg**
Packaging unit	**100 pc/pcs**
Material of enclosure	**Polyamide**



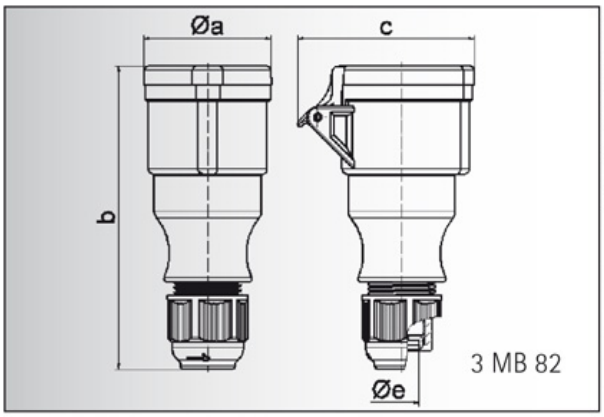

Ampere	16	16	16	32	32	32
Polzahl	3	4	5	3	4	5
a ø	51,0	58,0	65,0	67,0	67,0	73,0
b	145,0	148,0	156,0	185,0	185,0	185,0
c	74,0	84,0	90,0	94,0	94,0	102,0
e ø	18,0	18,0	18,0	23,0	23,0	23,0
Leiter mm² min	1	1	1	2,5	2,5	2,5
Leiter mm² max	2,5	2,5	2,5	6	6	6

Bals Elektrotechnik GmbH & Co. KG
D-57399 Kirchhundem - Albaum
phone: +49(0)2723/771-0 fax: +49(0)2723/771-177
email: info@bals.com www.bals.com

date: 09.12.2015