

Telescopic adapters

Part no. M22-TA
Article no. 226161
Catalog No. M22-TAQ

Powering Business Worldwide

Delivery programme

Product range			Control relays easyRelay
Product range			RMQ-Titan (drilling dimensions 22.5 mm)
Basic function			Accessories
Accessories			General accessories
Basic function accessories			Telescopic clip
Single unit/Complete unit			Single unit
			Steplessly adjustable, screw- and snap fixing (top-hat rail IEC/EN 60715). maximum of 10 x M22-TC brackets per enclosure, five of which can hold stay-put actuators Do not use in conjunction with emergency switching off actuators. With 35 mm top-hat rail to IEC/EN 60715 Infinitely adjustable from 75 to 115 mm through scales
Function			For equalization of the mounting depth of rear mounting devices in CI enclosures, and in cabinets with mounting depths of 115 - 155 mm for mounting of EASY, FAZ, PKZ, DIL etc. weighing 0.3 kg
Width		mm	44
For use with			easy200 easy500 easy700 easy800 MFD-CP8 EC4P PKZM0 PKE
Connection to SmartWire-DT			no
Product range			Accessories
Accessories			Telescopic adapters
Product range			Compact PLCs
Function			Accessories
Accessories			Mounting accessories

Technical data

General

Ambient temperature			
Open		°C	-25 - +70

Design verification as per IEC/EN 61439

Technical data for design verification			
Rated operational current for specified heat dissipation	I_n	A	0
Heat dissipation per pole, current-dependent	P_{vid}	W	0
Equipment heat dissipation, current-dependent	P_{vid}	W	0
Static heat dissipation, non-current-dependent	P_{vs}	W	0
Heat dissipation capacity	P_{diss}	W	0
Operating ambient temperature min.		°C	-25
Operating ambient temperature max.		°C	70
IEC/EN 61439 design verification			
10.2 Strength of materials and parts			
10.2.2 Corrosion resistance			Meets the product standard's requirements.
10.2.3.1 Verification of thermal stability of enclosures			Meets the product standard's requirements.
10.2.3.2 Verification of resistance of insulating materials to normal heat			Meets the product standard's requirements.
10.2.3.3 Verification of resistance of insulating materials to abnormal heat and fire due to internal electric effects			Meets the product standard's requirements.
10.2.4 Resistance to ultra-violet (UV) radiation			Please enquire
10.2.5 Lifting			Does not apply, since the entire switchgear needs to be evaluated.

10.2.6 Mechanical impact		Does not apply, since the entire switchgear needs to be evaluated.
10.2.7 Inscriptions		Meets the product standard's requirements.
10.3 Degree of protection of ASSEMBLIES		Does not apply, since the entire switchgear needs to be evaluated.
10.4 Clearances and creepage distances		Meets the product standard's requirements.
10.5 Protection against electric shock		Does not apply, since the entire switchgear needs to be evaluated.
10.6 Incorporation of switching devices and components		Does not apply, since the entire switchgear needs to be evaluated.
10.7 Internal electrical circuits and connections		Is the panel builder's responsibility.
10.8 Connections for external conductors		Is the panel builder's responsibility.
10.9 Insulation properties		
10.9.2 Power-frequency electric strength		Is the panel builder's responsibility.
10.9.3 Impulse withstand voltage		Is the panel builder's responsibility.
10.9.4 Testing of enclosures made of insulating material		Is the panel builder's responsibility.
10.10 Temperature rise		Not applicable.
10.11 Short-circuit rating		Is the panel builder's responsibility. The specifications for the switchgear must be observed.
10.12 Electromagnetic compatibility		Is the panel builder's responsibility. The specifications for the switchgear must be observed.
10.13 Mechanical function		The device meets the requirements, provided the information in the instruction leaflet (IL) is observed.

Technical data ETIM 6.0

Low-voltage industrial components (EG000017) / Accessories for control circuit devices (EC002024)		
Electric engineering, automation, process control engineering / Low-voltage switch technology / Low-voltage switch technology (accessories) / Control circuit devices (accessories) (ecl@ss8.1-27-37-92-16 [ACO043008])		
Type of electrical accessory		-
Type of mechanical accessory		-

Approvals

Product Standards		IEC/EN 60947-5; UL 508; CSA-C22.2 No. 14-05; CSA-C22.2 No. 94-91; CE marking
UL File No.		E29184
UL Category Control No.		NKCR
CSA File No.		012528
CSA Class No.		3211-03
North America Certification		UL listed, CSA certified

Dimensions

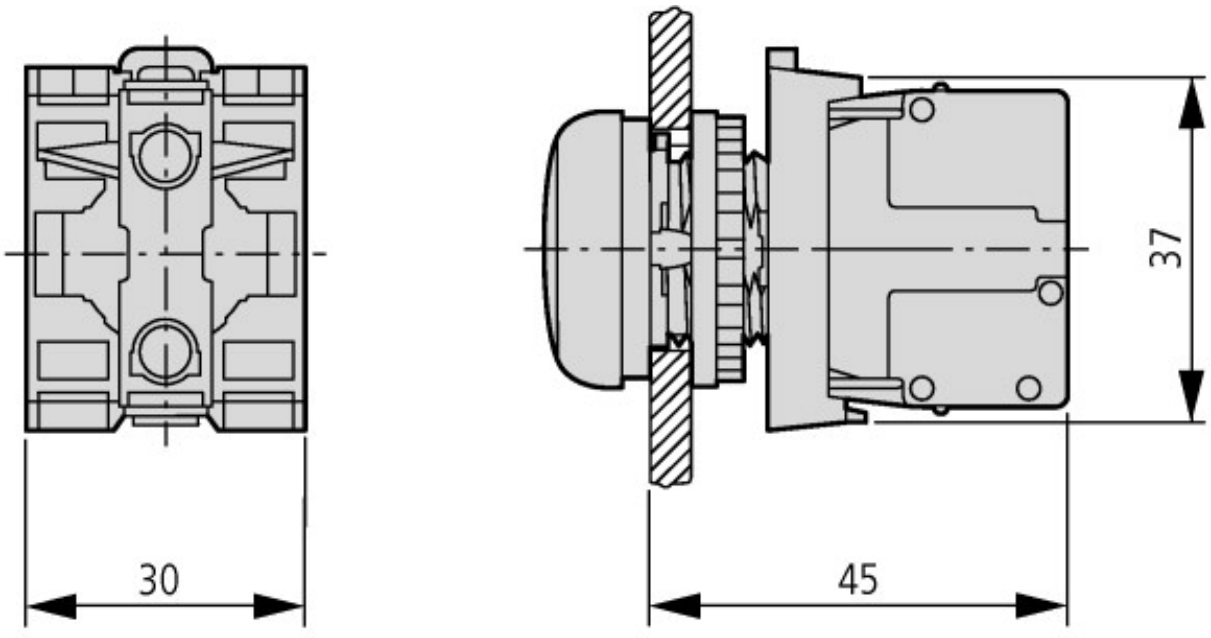

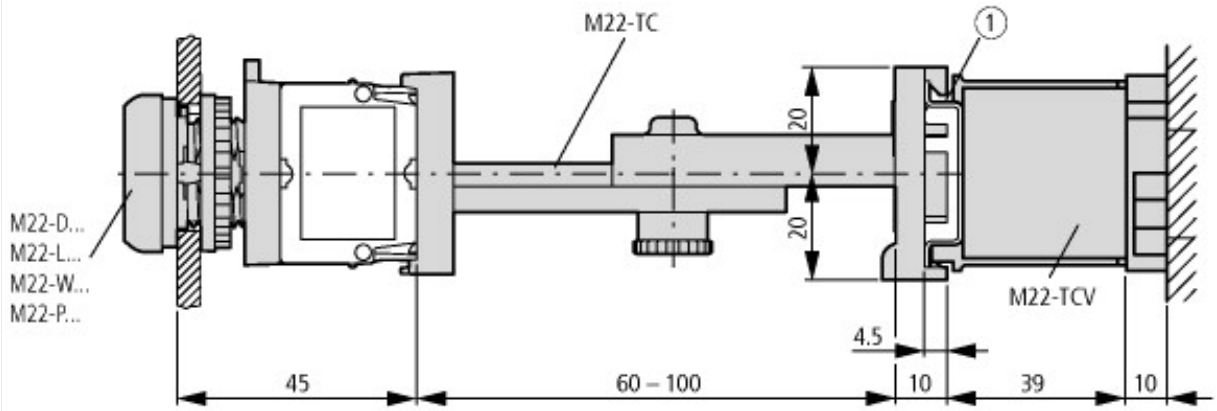

Pushbuttons and indicator lights with M22-TC telescopic clip and M22-TCV extension

① Top-hat rail to IEC/EN 60715

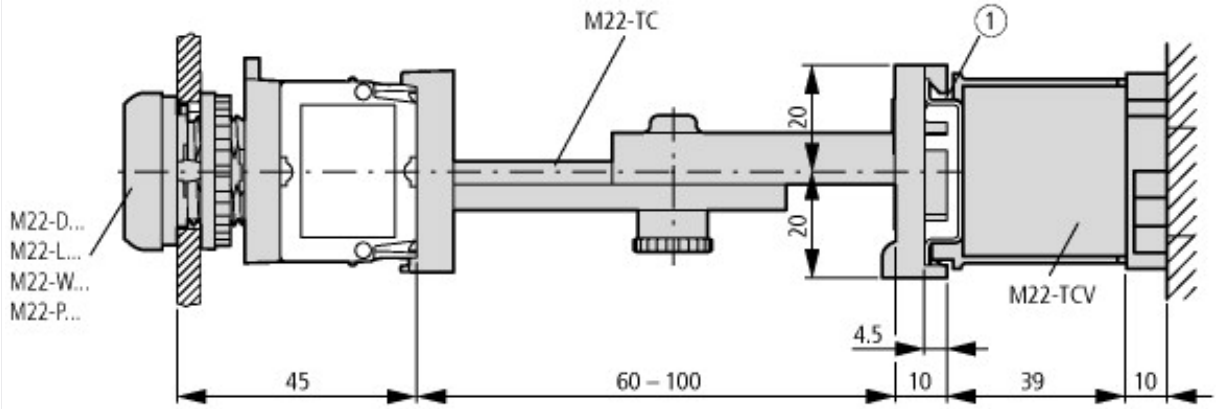

Pushbuttons and indicator lights with M22-TC telescopic clip and M22-TCV extension

① Top-hat rail to IEC/EN 60715

Additional product information (links)

IL04716002Z (AWA1160-1745) RMQ-Titan System	
IL04716002Z (AWA1160-1745) RMQ-Titan System	ftp://ftp.moeller.net/DOCUMENTATION/AWA_INSTRUCTIONS/IL04716002Z2015_02.pdf
Motor starters and "Special Purpose Ratings" for the North American market	http://www.moeller.net/binary/ver_techpapers/ver953en.pdf
Busbar Component Adapters for modern Industrial control panels	http://www.moeller.net/binary/ver_techpapers/ver960en.pdf

© 12/2015 by Eaton Industries GmbH