Product data sheet
Characteristics

VW3M2208
encoder connector drive end RJ45 - set of 5

Connectors

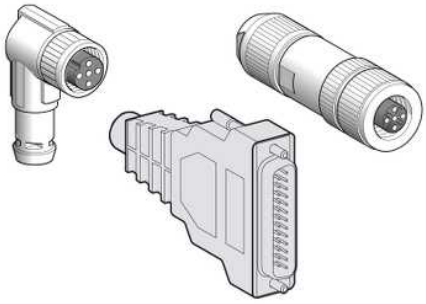

Main

Range compatibility	Lexium 32
Accessory / separate part category	Connection accessories
Accessory / separate part type	Connector
Product or component type	RJ45 connector
Product compatibility	LXM32
Accessory / separate part destination	Servo drive

Complementary

Quantity per set	Set of 5

Offer Sustainability

Sustainable offer status	Not Green Premium product
REACh	Reference not containing SVHC above the threshold

The information provided in this documentation contains general descriptions and/or technical characteristics of the performance of the products contained herein.
This documentation is not intended as a substitute for and is not to be used for determining suitability or reliability of these products for specific user applications.
It is the duty of any such user or integrator to perform the appropriate and complete risk analysis, evaluation and testing of the products with respect to the relevant specific application or use thereof.
Neither Schneider Electric Industries SAS nor any of its affiliates or subsidiaries shall be responsible or liable for misuse of the information contained herein.