Product data sheet
Characteristics

TM3TM3
module TM3 - 2 temperature inputs and 1 analog output



Main

Range of product	Modicon TM3
Product or component type	Input/Output analog module
Range compatibility	Modicon M221 Modicon M241 Modicon M251
Analogue input number	2
Analogue input type	Pt 1000 temperature probe, analogue input range: - 200...600 °C Pt 100 temperature probe, analogue input range: - 200...850 °C Ni 100/Ni 1000 temperature probe, analogue input range: - 60...180 °C Thermocouple, analogue input range: 0...2315 °C with thermocouple C Thermocouple, analogue input range: - 200...800 °C with thermocouple E Thermocouple, analogue input range: - 200...1300 °C with thermocouple N Thermocouple, analogue input range: - 200...400 °C with thermocouple T Thermocouple, analogue input range: 0...1820 °C with thermocouple B Thermocouple, analogue input range: 0...1760 °C with thermocouple S Thermocouple, analogue input range: 0...1760 °C with thermocouple R Thermocouple, analogue input range: - 200...1300 °C with thermocouple K Thermocouple, analogue input range: - 200...1000 °C with thermocouple J Voltage, analogue input range: - 10...10 V Voltage, analogue input range: 0...10 V Current, analogue input range: 0...20 mA Current, analogue input range: 4...20 mA
Analogue output number	1
Analogue output type	- 10...10 V voltage 0...10 V voltage 0...20 mA current 4...20 mA current

The information provided in this documentation contains general descriptions and/or technical characteristics of the performance of the products contained herein.
This documentation is not intended as a substitute for and is not to be used for determining suitability or reliability of these products for specific user applications.
It is the duty of any such user or integrator to perform the appropriate and complete risk analysis, evaluation and testing of the products with respect to the relevant specific application or use thereof.
Neither Schneider Electric Industries SAS nor any of its affiliates or subsidiaries shall be responsible or liable for misuse of the information contained herein.

Complementary

Analogue input resolution	15 bits + sign 16 bits
Permissible continuous overload	40 mA current 13 V voltage
Input impedance	>= 1 MOhm temperature probe >= 1 MOhm thermocouple >= 1 MOhm voltage <= 50 Ohm current
Analogue output resolution	12 bits
LSB value	3.91 µA, analogue output: 4...20 mA current 4.88 µA, analogue output: 0...20 mA current 4.88 mV, analogue output: - 10...10 V voltage 2.44 mV, analogue output: 0...10 V voltage 0.1 °C thermocouple 0.1 °C temperature probe 0.244 µA, analogue input: 4...20 mA current 0.30 µA, analogue input: 0...20 mA current 0.30 mV, analogue input: - 10...10 V voltage 0.15 mV, analogue input: 0...10 V voltage
Load type	Resistive
Load impedance ohmic	300 Ohm current 1 kOhm voltage
Stabilisation time	1 ms
Conversion time	10 ms + 10 ms per channel + 1 controller cycle time for analogue input voltage/current 100 ms + 100 ms per channel + 1 controller cycle time for analogue input temperature probe 100 ms + 100 ms per channel + 1 controller cycle time for analogue input thermocouple
Sampling duration	100 ms for analogue input temperature probe 100 ms for analogue input thermocouple 100 ms for analogue input voltage/current 10 ms for analogue input voltage/current
Absolute accuracy error	+/- 0.1 % of full scale at 25 °C for analogue output voltage/current +/- 0.4 % of full scale at <= 0 °C for thermocouple N +/- 0.4 % of full scale at <= 0 °C for thermocouple T +/- 0.4 % of full scale at <= 0 °C for thermocouple E +/- 0.4 % of full scale at <= 0 °C for thermocouple J +/- 0.4 % of full scale at <= 0 °C for thermocouple K +/- 6 °C at 0...200 °C for thermocouple S +/- 6 °C at 0...200 °C for thermocouple R +/- 0.1 % of full scale for Pt 100/Pt 1000, Ni 100/ Ni 1000 temperature probe +/- 0.1 % of full scale for thermocouple C +/- 0.1 % of full scale at 25 °C for analogue input voltage/current +/- 1 % of full scale
Temperature drift	+/- 0.006 %FS/°C
Repeat accuracy	+/- 0.4 %FS for output +/-0.5 %FS for input
Non-linearity	+/- 0.1 %FS analog input +/- 0.01 %FS analog output
Output ripple	20 mV
Cross talk	<= 1 LSB
[Us] rated supply voltage	24 V DC
Supply voltage limits	20.4...28.8 V
Type of cable	<= 30 m twisted shielded pairs cable for input/output circuit
Current consumption	80 mA at 24 V DC (full load) via external supply 60 mA at 5 V DC (full load) via bus connector 55 mA at 5 V DC (no load) via bus connector 55 mA at 24 V DC (no load) via external supply
Local signalling	1 LED green for PWR
Electrical connection	11 x 2.5 mm² removable screw terminal block with pitch 5.08 mm adjustment for inputs, outputs and supply
Insulation	500 V AC between output and internal logic 1500 V AC between output and supply 500 V AC between input and internal logic 1500 V AC between input and supply
Marking	CE

Surge withstand	0.5 kV for I/O with differential mode protection conforming to EN/IEC 61000-4-5 1 kV for I/O with common mode protection conforming to EN/IEC 61000-4-5 0.5 kV for power supply with differential mode protection conforming to EN/IEC 61000-4-5 1 kV for power supply with common mode protection conforming to EN/IEC 61000-4-5
Mounting support	Plate or panel with fixing kit Top hat type TH35-7.5 rail conforming to IEC 60715 Top hat type TH35-15 rail conforming to IEC 60715
Height	90 mm
Depth	70 mm
Width	23.6 mm
Product weight	0.115 kg

Environment

Standards	EN/IEC 61131-2 EN/IEC 61010-2-201
Resistance to electrostatic discharge	4 kV on contact conforming to EN/IEC 61000-4-2 8 kV in air conforming to EN/IEC 61000-4-2
Resistance to electromagnetic fields	1 V/m at 2 GHz...3 GHz conforming to EN/IEC 61000-4-3 3 V/m at 1.4 GHz...2 GHz conforming to EN/IEC 61000-4-3 10 V/m at 80 MHz...1 GHz conforming to EN/IEC 61000-4-3
Resistance to magnetic fields	30 A/m at 50...60 Hz conforming to EN/IEC 61000-4-8
Resistance to fast transients	1 kV I/O conforming to EN/IEC 61000-4-4
Resistance to conducted disturbances, induced by radio frequency fields	3 V at spot frequency (2, 3, 4, 6.2, 8.2, 12.6, 16.5, 18.8, 22, 25 MHz) conforming to Marine specification (LR, ABS, DNV, GL) 10 V at 0.15...80 MHz conforming to EN/IEC 61000-4-6
Electromagnetic emission	Radiated emissions, test level: 47 dBµV/m QP class A (10 m at 230 MHz...1 GHz) conforming to EN/IEC 55011 Radiated emissions, test level: 40 dBµV/m QP class A (10 m at 30...230 MHz) conforming to EN/IEC 55011
Immunity to microbreaks	10 ms
Ambient air temperature for operation	-10...35 °C (vertical installation) -10...55 °C (horizontal installation)
Ambient air temperature for storage	-25...70 °C
Relative humidity	10...95 % without condensation in storage 10...95 % without condensation in operation
IP degree of protection	IP20
Pollution degree	2
Operating altitude	0...2000 m
Storage altitude	0...3000 m
Vibration resistance	3 gn at 8.4...150 Hz with DIN rail mounting support 3.5 mm at 5...8.4 Hz with DIN rail mounting support
Shock resistance	15 gn during 11 ms

Offer Sustainability

Sustainable offer status	Green Premium product
RoHS (date code: YYWW)	Compliant - since 1415 - Schneider Electric declaration of conformity
REACh	Reference not containing SVHC above the threshold
Product environmental profile	Available Download Product Environmental
Product end of life instructions	Available Download End Of Life Manual

Dimensions Drawings

Dimensions

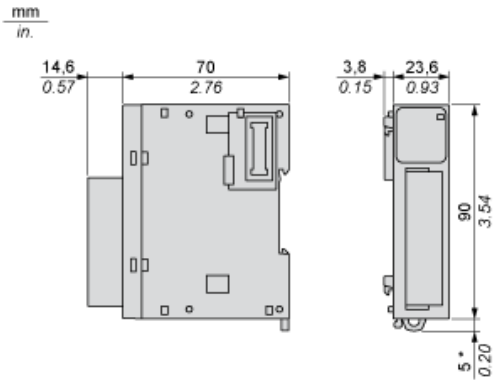

(*) 8.5 mm/0.33 in when the clamp is pulled out.

Spacing Requirements

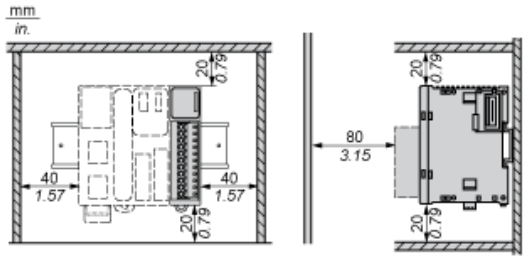

Mounting on a Rail

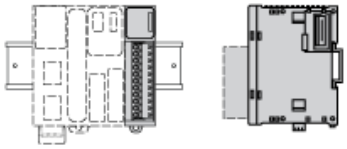

Incorrect Mounting



Mounting on a Panel Surface

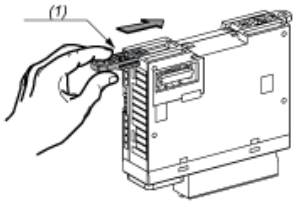

(1) Install a mounting strip

Mounting Hole Layout

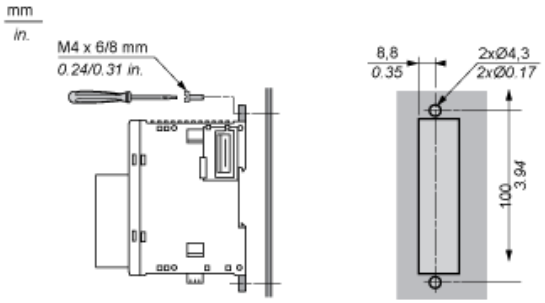

Analogue Mixed I/O Module

Wiring Diagram (Current/Voltage type)

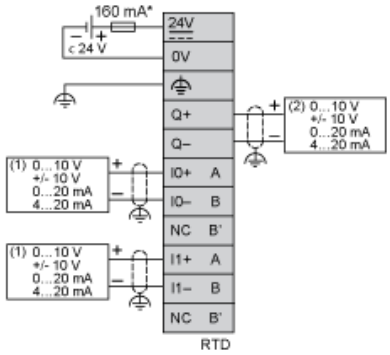

(*) Type T fuse
(1) Current/Voltage analog output device
(2) Current/Voltage analog input device

Wiring Diagram (Thermocouple input type)

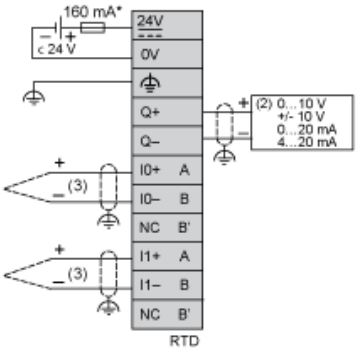

(*) Type T fuse
(2) Current/Voltage analog input device
(3) Thermocouple

Wiring Diagram (Temperature probe input type)

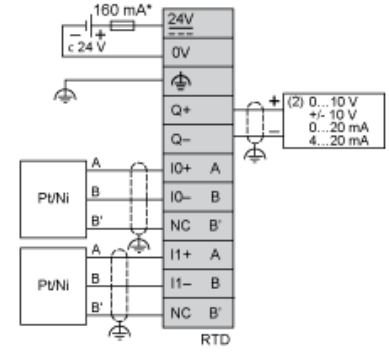

(*) Type T fuse
(2) Current/Voltage analog input device