

Function element, SmartWire-DT, PKE / XTPE

Part no. PKE-SWD-SP
Article no. 150614
Catalog No. PKE-SWD-SP

Powering Business Worldwide

Delivery programme

Product range			SmartWire-DT slave
Subrange			SmartWire-DT PKE (motor protective circuit breaker)
Basic function			Motor protection Motor protection for heavy starting duty System protection
Product range			Accessories
Accessories			SmartWire-DT PKE (motor-protective circuit-breaker)
Function			For connecting the motor-protective circuit-breaker with PKE-XTU(W)A-... trip blocks(motor protection) to SmartWire-DT
Description			Fitted on PKE motor-protective circuit-breaker
Messages			Contactor state PKE Motor current in % Thermal motor image in % Trip indications (Overload, Short-circuit,...) Set value of overload releases Set time lag (CLASS) Part no. of trip block
Commands			Remote disconnection of motor-protective circuit-breaker
For use with			PKE12 PKE32 PKE65
Connection to SmartWire-DT			yes

Technical data

General

Standards			IEC/EN 61131-2
Dimensions (W x H x D)		mm	45 x 46.8 x 70.3
Weight		kg	0.02
Mounting			at PKE12/32/65
Mounting position			as PKE12/35/65

Ambient conditions, mechanical

Protection type (IEC/EN 60529, EN50178, VBG 4)			IP20
Vibrations (IEC/EN 61131-2:2008)			
Constant amplitude 3,5 mm		Hz	5 - 8.4
Constant acceleration 1 g		Hz	8.4 - 150
Mechanical shock resistance (IEC/EN 60068-2-27) semi-sinusoidal 15 g/11 ms		Impacts	9
Drop to IEC/EN 60068-2-31	Drop height	mm	50
Free fall, packaged (IEC/EN 60068-2-32)		m	0.3

Electromagnetic compatibility (EMC)

Overvoltage category			II
Pollution degree			2
Electrostatic discharge (IEC/EN 61131-2:2008)			
Air discharge (Level 3)		kV	8
Contact discharge (Level 2)		kV	4
Electromagnetic fields (IEC/EN 61131-2:2008)			
80 - 1000 MHz		V/m	10
1.4 - 2 GHz		V/m	3
2 - 2.7 GHz		V/m	1
Radio interference suppression SmartWire-DT			
Radio interference suppression			EN 55011 Class A
Burst (IEC/EN 61131-2:2008, Level 3)			
SmartWire-DT cables			

Signal lines		kV	1
CAN/DP-bus cable			
SmartWire-DT cables		kV	1
Radiated RFI (IEC/EN 61131-2:2008, Level 3)		V	10

Climatic environmental conditions

Operating ambient temperature (IEC 60068-2)		°C	
Ambient temperature		°C	-25 - +60
Condensation			Take appropriate measures to prevent condensation
Storage	ϑ	°C	-30 - +70
Relative humidity, non-condensing (IEC/EN 60068-2-30)		%	5 - 95

SmartWire-DT network

Station type			SmartWire-DT slave
Address allocation			automatic
Status SmartWire-DT		LED	Green
Connections			Plug, 8-pole
Connection			External device plug SWD4-8SF2-5
Current consumption		mW	
15-V-SWD supply		mA	35

Design verification as per IEC/EN 61439

Technical data for design verification			
Rated operational current for specified heat dissipation	I_n	A	0
Heat dissipation per pole, current-dependent	P_{vid}	W	0
Equipment heat dissipation, current-dependent	P_{vid}	W	0
Static heat dissipation, non-current-dependent	P_{vs}	W	0.5
Heat dissipation capacity	P_{diss}	W	0
Operating ambient temperature min.		°C	-25
Operating ambient temperature max.		°C	55
IEC/EN 61439 design verification			
10.2 Strength of materials and parts			
10.2.2 Corrosion resistance			Meets the product standard's requirements.
10.2.3.1 Verification of thermal stability of enclosures			Meets the product standard's requirements.
10.2.3.2 Verification of resistance of insulating materials to normal heat			Meets the product standard's requirements.
10.2.3.3 Verification of resistance of insulating materials to abnormal heat and fire due to internal electric effects			Meets the product standard's requirements.
10.2.4 Resistance to ultra-violet (UV) radiation			Meets the product standard's requirements.
10.2.5 Lifting			Does not apply, since the entire switchgear needs to be evaluated.
10.2.6 Mechanical impact			Does not apply, since the entire switchgear needs to be evaluated.
10.2.7 Inscriptions			Meets the product standard's requirements.
10.3 Degree of protection of ASSEMBLIES			Does not apply, since the entire switchgear needs to be evaluated.
10.4 Clearances and creepage distances			Meets the product standard's requirements.
10.5 Protection against electric shock			Does not apply, since the entire switchgear needs to be evaluated.
10.6 Incorporation of switching devices and components			Does not apply, since the entire switchgear needs to be evaluated.
10.7 Internal electrical circuits and connections			Is the panel builder's responsibility.
10.8 Connections for external conductors			Is the panel builder's responsibility.
10.9 Insulation properties			
10.9.2 Power-frequency electric strength			Is the panel builder's responsibility.
10.9.3 Impulse withstand voltage			Is the panel builder's responsibility.
10.9.4 Testing of enclosures made of insulating material			Is the panel builder's responsibility.
10.10 Temperature rise			The panel builder is responsible for the temperature rise calculation. Eaton will provide heat dissipation data for the devices.
10.11 Short-circuit rating			Is the panel builder's responsibility. The specifications for the switchgear must be observed.
10.12 Electromagnetic compatibility			Is the panel builder's responsibility. The specifications for the switchgear must be observed.
10.13 Mechanical function			The device meets the requirements, provided the information in the instruction leaflet (IL) is observed.

Technical data ETIM 6.0

Low-voltage industrial components (EG000017) / Accessories for low-voltage switch technology (EC002498)	
Electric engineering, automation, process control engineering / Low-voltage switch technology / Low-voltage switch technology (accessories) / Component for low-voltage switch technology (accessories) (ecl@ss8.1-27-37-92-01 [AKN570010])	
Type of accessory	Connection technique

Approvals

Product Standards	UL508; CSA-C22.2 No. 14; IEC60847-4-1; CE marking
UL File No.	E29184
UL Category Control No.	NKCR
CSA File No.	165628
CSA Class No.	3211-07
North America Certification	UL listed, CSA certified
Specially designed for North America	No

Dimensions

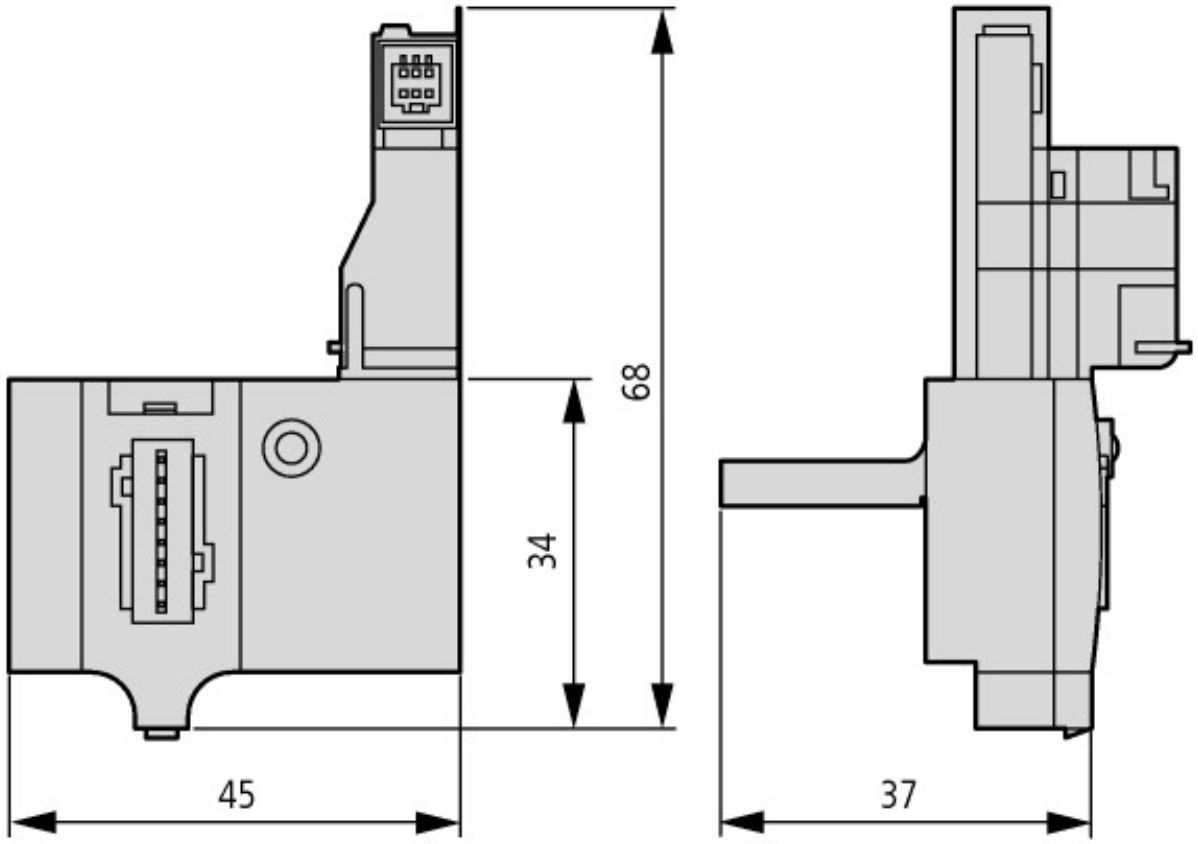

SmartWire-DT PKE (motor-protective circuit-breaker)

Additional product information (links)

IL03407192Z SmartWire-DT, Communication extension for PKE12/32/65	
IL03407192Z SmartWire-DT, Communication extension for PKE12/32/65	ftp://ftp.moeller.net/DOCUMENTATION/AWA_INSTRUCTIONS/IL03407192Z2012_02.pdf
MN05006001Z SmartWire-DT, modules	
MN05006001Z SmartWire-DT, Teilnehmer - Deutsch	ftp://ftp.moeller.net/DOCUMENTATION/AWB_MANUALS/MN05006001Z_DE.pdf
MN05006001Z SmartWire-DT, modules - English	ftp://ftp.moeller.net/DOCUMENTATION/AWB_MANUALS/MN05006001Z_EN.pdf
MN05006001Z SmartWire-DT, modulo - italiano	ftp://ftp.moeller.net/DOCUMENTATION/AWB_MANUALS/MN05006001Z_IT.pdf
MN05006002Z (AWB2723-1617) SmartWire-DT, The system	
MN05006002Z (AWB2723-1617) SmartWire-DT, Das System - Deutsch	ftp://ftp.moeller.net/DOCUMENTATION/AWB_MANUALS/MN05006002Z_DE.pdf
MN05006002Z (AWB2723-1617) SmartWire-DT, The system - English	ftp://ftp.moeller.net/DOCUMENTATION/AWB_MANUALS/MN05006002Z_EN.pdf
MN05006002Z (AWB2723-1617) SmartWire-DT, il sistema - italiano	ftp://ftp.moeller.net/DOCUMENTATION/AWB_MANUALS/MN05006002Z_IT.pdf

MN05013002Z SmartWire-DT, Gateways	
MN05013002Z SmartWire-DT, Gateways - Deutsch	ftp://ftp.moeller.net/DOCUMENTATION/AWB_MANUALS/MN05013002Z_DE.pdf
MN05013002Z SmartWire-DT, Gateways - English	ftp://ftp.moeller.net/DOCUMENTATION/AWB_MANUALS/MN05013002Z_EN.pdf
MN05013002Z SmartWire-DT, Gateway - italiano	ftp://ftp.moeller.net/DOCUMENTATION/AWB_MANUALS/MN05013002Z_IT.pdf
Motor starters and "Special Purpose Ratings" for the North American market	http://www.moeller.net/binary/ver_techpapers/ver953en.pdf
Busbar Component Adapters for modern Industrial control panels	http://www.moeller.net/binary/ver_techpapers/ver960en.pdf
SWD-ASSIST	http://downloadcenter.moeller.net/en/software.a487d8b7-da91-486f-b3ba-a7ca2035db99

© 12/2015 by Eaton Industries GmbH