Electrical Connection Technology

New Items: Autumn 2007

ELECTRICAL INTERCONNECTIONS

WAGO®
INNOVATIVE CONNECTIONS

Contents

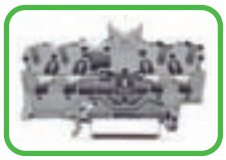

Rail-Mounted Terminal Block Systems	**Volume 1**	**02 – 57**



PCB Terminal Blocks and Connectors	**Volume 2**	**58 – 91**



WINSTA	**WINSTA**	**93 – 97**
Index of Item Nos.		**98 – 102**

Contents
Volume 1

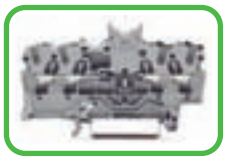

TOPJOB®S double potential terminal blocks with CAGE CLAMP®S connection
1.5 mm²/AWG 22 – 14 Series 2001 04
2.5 mm²/AWG 22 – 12 Series 2002 04



TOPJOB®S 3- and 4-conductor terminal blocks with CAGE CLAMP®S connection
2.5 mm²/AWG 22 – 12 Series 2002 05



TOPJOB®S connectors with CAGE CLAMP®S connection
1.5 mm² – 4 mm²/AWG 14 – 10 Series 20xx 06 – 07

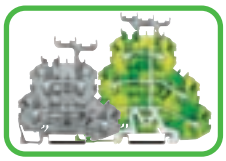

TOPJOB®S 2-con. double deck terminal blocks with CAGE CLAMP®S connection
2.5 mm²/AWG 22 – 12 Series 2002 08 – 09

TOPJOB®S 2-con. double and triple deck terminal blocks with CAGE CLAMP®S connection
2.5 mm²/AWG 22 – 12 Series 2002 10



TOPJOB®S 4-con. double deck terminal blocks with CAGE CLAMP®S connection
2.5 mm²/AWG 22 – 12 Series 2002 08 – 09



TOPJOB®S multilevel installation term. blocks w. CAGE CLAMP®S connection
4 mm²/AWG 22 – 12 Series 2003 14
6 mm²/AWG 20 – 10 Series 2005 15

TOPJOB®S N-disconnect terminal blocks and power distribution disconnect terminal blocks with CAGE CLAMP®S connection
2.5 mm² – 25 mm²/AWG 22 – 4 Series 20xx 16

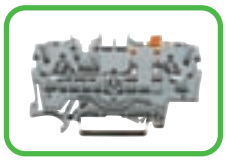

TOPJOB®S disconnect terminal blocks Series 2002 20 – 21

TOPJOB®S double deck disconnect terminal blocks Series 2002 22



TOPJOB®S diode terminal blocks Series 2001 23
and double deck terminal blocks Series 2002 24 – 25
and triple deck terminal blocks Series 2002 26 – 29



TOPJOB®S accessoires 30 – 31

TOPJOB®S group marker carriers Series 2009 31

Marking of TOPJOB®S rail-mounted terminal blocks Series 2009 32



Rail-mounted high current terminal blocks with POWER CAGE CLAMP® connection
35 mm²/AWG 8 – 2 Series 285 34 – 35
50 mm²/AWG 8 – 2/0 Series 285 36

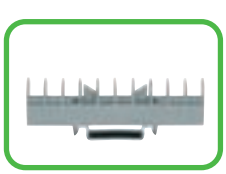

Collective carrier for jumpers (suitable for longitudinal disconnect and transverse switch terminal blocks) Series 282 33



X-COM® -SYSTEM
2-cond./1-pin receptacle terminal blocks
0.08 mm² – 4 mm²/AWG 28 – 12 — Series 769 — 38 – 39
1-cond./1-cond. disconnect receptacle terminal blocks
0.08 mm² – 4 mm²/AWG 28 – 12 — Series 769 — 40

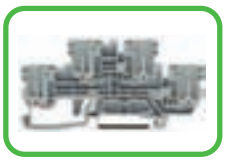

X-COM® -SYSTEM
2-conductor/
2-pin double deck receptacle terminal — Series 870 — 41
Types of Assembly — Series 870 — 42 – 43

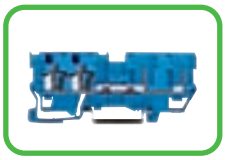

X-COM® -SYSTEM
Blue components — Series 769 — 44 – 45



X-COM® -SYSTEM
Female plugs for self-assembly — Series 769 — 46 – 47

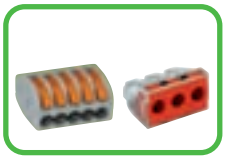

Compact connector for flexible conductors
2 x/3 x/4 x 0.08 mm² – 2.5 mm²/AWG 28 – 12
Series 222 — 48

Push-wire connectors for junction boxes
4 x 0.75 mm² – 2.5 mm²/AWG 18 – 12 and
3 x 2.5 mm² – 6 mm²/AWG 14 – 10 — Series 773 — 49



Shield (screen) clamps, — Series 791 — 50
Carrier with grounding foot, — Series 790 — 50
Busbar carriers — Series 790 — 51



Shield termination — Series 709 — 51



Wire and cable marking — Series 211 — 54 – 56



Marker carriers
for WCB combi marking system — Series 2009 — 56



Ex e-/Ex i Seperator Plate — Series 2009 — 90
Separator Plates, Oversized — Series 2002 — 91
Separator Plates, Oversized — Series 2004 — 91
Separator Plates, Oversized — Series 2006 — 91

TOPJOB®S
Double Potential Terminal Blocks 1.5 (2.5) mm²/AWG 16 Series 2001

0.25 – 1.5 (2.5) mm²❶ | AWG 22 – 14
800 V/8 kV/3
I_N 18 A (24 A)
Terminal block width 4.2 mm / 0.165 in
9 – 11 mm / 0.39 in

❶ can be connected: 0.25 mm² – 2.5 mm² "s + f-st";
can be pushed in directly: 0.5 mm² – 2.5 mm² "s" and
0.75 mm² – 1.5 mm² "insulated ferrule, 12 mm/0.472 in"

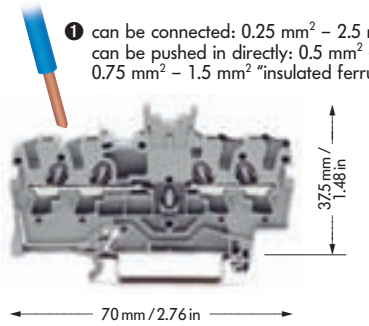

	Item No.	Pack.-unit pcs
Double potential terminal block,		
grey	**2001-1441**	100

Attention! This double potential terminal block cannot be commoned with push-in type jumper bars!

Accessoires appropriate marking system **WMB/Marker strips** (see Full Line Catalog W4 Volume 1, Section 14)

End and intermediate plate, 0.8 mm / 0.331 in thick
orange **2002-1492** 100 (4 x 25)
grey **2002-1491** 100 (4 x 25)

Insulation stop , 5 pcs/strip 200 strips
light grey **2001-171** 0.25-0.5 mm²

Double potential terminal blocks are space savers. Two independent through terminal blocks are placed in one insulated housing on one level. The width of the housing is only 4.2 mm/0.165 in. Compared to standard through terminal blocks, the width is only 2.1 mm/0.083 in.
Input and output contacts of one circuit are placed on the same side of the terminal block. Both circuits can be individually marked according to input and output.

2.5 (4) mm²/AWG 12 Series 2002

0.25 – 2.5 (4) mm²❷ | AWG 22 – 12
800 V/8 kV/3
I_N 24 A (32 A)
Terminal block width 5.2 mm / 0.205 in
10 – 12 mm / 0.43 in

❷ can be connected: 0.25 mm² – 4 mm² "s + f-st";
can be pushed in directly: 0.75 mm² – 4 mm² "s" and
0.75 mm² – 2.5 mm² "insulated ferrule, 12 mm/0.472 in"

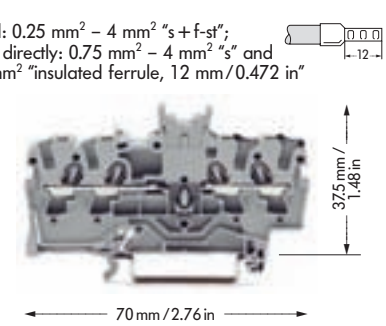

	Item No.	Pack.-unit pcs
Double potential terminal block,		
grey	**2002-1441**	100

Attention! This double potential terminal block cannot be commoned with push-in type jumper bars!

End and intermediate plate, 0.8 mm / 0.331 in thick
orange **2002-1492** 100 (4 x 25)
grey **2002-1491** 100 (4 x 25)

Insulation stop , 5 pcs/strip 200 strips
light grey **2001-171** 0.25-0.5 mm²
dark grey **2002-172** 0.75-1 mm²

Protective warning marker,
for 5 terminal block
yellow **2002-115** 100 (4 x 25)

Double potential terminal blocks are space savers. Two independent through terminal blocks are placed in one insulated housing on one level. The width of the housing is only 5.2 mm/0.205 in. Compared to standard through terminal blocks, the width is only 2.6 mm/0.103 in.
Input and output contacts of one circuit are placed on the same side of the terminal block. Both circuits can be individually marked according to input and output.

0.25 – 2.5 (4) mm² ❶ **AWG 22 – 12** **800 V/8 kV/3 600 V, 20 A** **I_N 24 A (32 A) 600 V, 20 A** **Terminal block width 5.2 mm / 0.205 in** **10 – 12 mm / 0.43 in** *	**0.25 – 2.5 (4) mm²** ❶ **AWG 22 – 12** **800 V/8 kV/3 600 V, 20 A** **I_N 24 A (32 A) 600 V, 20 A** **Terminal block width 5.2 mm / 0.205 in** **10 – 12 mm / 0.43 in** *

❶ can be connected: 0.25 mm² – 4 mm² "s+f-st";
can be pushed in directly: 0.75 mm² – 4 mm² "s" and
0.75 mm² – 2.5 mm² "insulated ferrule, 12 mm/0.472 in"

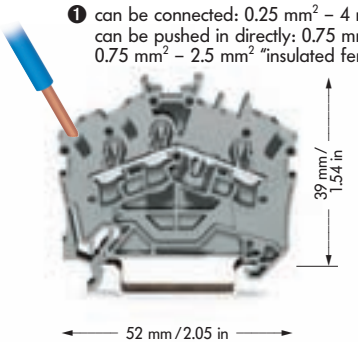

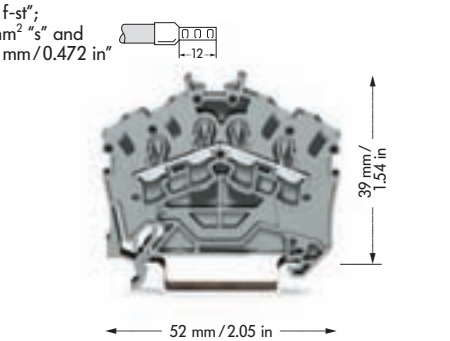

	Item No.	Pack.-unit pcs	Item No.	Pack.-unit pcs
3-conductor through terminal blocks			**4-conductor through terminal blocks**	
grey	**2002-6301**	100	**2002-6401**	100
blue	**2002-6304** ②	100	**2002-6404** ②	100
orange	**2002-6302**	100	**2002-6402**	100
more colors are being prepared			more colors are being prepared	
3-conductor ground (earth) terminal block			**4-conductor ground (earth) terminal block**	
green-yellow	**2002-6307**	100	**2002-6407**	100
Ex approvals in preparation			Ex approvals in preparation	
② Suitable for Ex i applications			② Suitable for Ex i applications	
			Attention!	
			These terminal blocks cannot be commoned!	

Accessories

appropriate marker system (see Full Line Catalog W4 Vol. 1, Sec. 14)

WMB/Marker strips/WMB Inline

End and intermediate plate, 0.8 mm/0.031 in thick			**End and intermediate plate,** 0.8 mm/0.031 in thick	
	orange	**2002-6392** 100 (4 x 25)	orange	**2002-6392** 100 (4 x 25)
	grey	**2002-6391** 100 (4 x 25)	grey	**2002-6391** 100 (4 x 25)
Insulation stop, 5 pcs/strip		200 strips	**Insulation stop,** 5 pcs/strip	200 strips
	light grey	**2002-171** 0.25-0.5 mm²	light grey	**2002-171** 0.25-0.5 mm²
	dark grey	**2002-172** 0.75-1 mm²	dark grey	**2002-172** 0.75-1 mm²
Push-in type jumper bars, light grey, insulated, I_N 25 A				
	2-way	**2002-402** 200 (8 x 25)		
	3-way	**2002-403** 200 (8 x 25)		
	4-way	**2002-404** 200 (8 x 25)		
	5-way	**2002-405** 100 (4 x 25)		
	:	:		
	10-way	**2002-410** 100 (4 x 25)		
Push-in type jumper bars, light grey, insulated, I_N 25 A				
	1 - 3	**2002-433** 200 (8 x 25)		
	1 - 4	**2002-434** 200 (8 x 25)		
	1 - 5	**2002-435** 100 (4 x 25)		
	:	:		
	1 - 10	**2002-440** 100 (4 x 25)		
Protective warning marker,			**Protective warning marker,**	
	for 5 terminal blocks		for 5 terminal blocks	
	yellow	**2002-115** 100 (4 x 25)	yellow	**2002-115** 100 (4 x 25)
Modular TOPJOB®S connector,				
	for jumper contact slot			
	1 pole	**2002-511** 100 (4 x 25)		
Spacer, modular		**2002-549** 100 (4 x 25)		
Test plug adapter, for test plug 4 mm/0.157 in Ø				
		2009-174 100 (4 x 25)		
Testing tap, for max. 2.5 mm²		**2009-182** 100 (4 x 25)		



3- and 4-conductor terminal blocks

The new TOPJOB®S rail-mounted terminal blocks have a conductor entry angle of 35 degrees allowing for a very small bend radius and an extremely short wiring distance to the cable duct. For applications in switchgear and control cabinets using the LSC wiring system from Lütze, for example, the new terminal blocks offer a space and cost saving solution. This way, conductors can be placed very close to the terminal blocks and their height can be kept relatively low.

Product characteristics

- CAGE CLAMP®S connection for all types of conductors, with the additional benefit that stripped solid wires and fine-stranded ferruled wires can be simply pushed in
- Vibration-proof, fast, maintenance-free connection
- 3-conductor through and ground (earth) conductor terminal blocks equipped with dual jumper slot
- 4-conductor terminal blocks allow for the multiplication of potentials without using any jumpers and any additional terminal blocks
- 3- and 4-conductor terminal blocks have the same dimensions

* Further approvals with corresponding ratings can be found at www.wago.com

TOPJOB®S
Modular Connectors
Series 2001/2002/2004

0.25 – 1.5 (2.5) mm² ❶ | AWG 22 – 14	0.25 – 2.5 (4) mm² ❷ | AWG 22 – 12	0.5 – 4 (6) mm² ❸ | AWG 20 – 10
500 V/6 kV/3 | 300 V, 15 A | 300 V, 15 A	500 V/6 kV/3 | 300 V, 20 A | 300 V, 20 A	500 V/6 kV/3 | 300 V, 30 A | 300 V, 30 A
I_N 18 A	I_N 24 A	I_N 32 A
Terminal block width 4.2 mm / 0.165 in	Terminal block width 5.2 mm / 0.205 in	Terminal block width 6.2 mm / 0.244 in
9 – 11 mm / 0.39 in	10 – 12 mm / 0.43 in	11 – 13 mm / 0.47 in
*	*	*







Item No.	Pack.-unit pcs
Modular TOPJOB®S connectors	
with CAGE CLAMP®S connection, modular, grey,	
1 pole **2001-511**	100 (4 x 25)
Spacer, for bridging over commoned terminal blocks, for example, modular, grey	
2001-549	100 (4 x 25)
❶ can be connected: 0.25 mm² – 2.5 mm² "s+f-st"; can be pushed in directly: 0.5 mm² – 2.5 mm² "s" and 0.75 mm² – 1.5 mm² "insulated ferrule, 12 mm/0.472 in"	
Item-specific accessories	
End plate, 1.5 mm/0.059 in thick	
grey **2002-541**	100 (4 x 25)
WMB Multi marking card, 10 strips with 10 markers each, white with black printing, 4 – 4.2 mm/0.157 - 0.165 in wide	
793-4 . . .	5 cards
794-4 . . .	5 cards
see Full Line Catalog W4 Volume 1, Section 14	

Item No.	Pack.-unit pcs
Modular TOPJOB®S connectors	
with CAGE CLAMP®S connection, modular, grey,	
1 pole **2002-511**	100 (4 x 25)
Spacer, for bridging over commoned terminal blocks, for example, modular, grey	
2002-549	100 (4 x 25)
❷ can be connected: 0.25 mm² – 4 mm² "s+f-st"; can be pushed in directly: 0.75 mm² – 4 mm² "s" and 0.75 mm² – 2.5 mm² "insulated ferrules, 12 mm/0.472 in"	
Item-specific accessories	
End plate, 1.5 mm/0.059 in thick	
grey **2002-541**	100 (4 x 25)
WMB Multi marking card, 10 strips with 10 markers each, white with black printing, 5 – 5.2 mm/0.197 - 0.205 in wide	
793-5 . . .	5 cards
794-5 . . .	5 cards
see Full Line Catalog W4 Volume 1, Section 14	

Item No.	Pack.-unit pcs
Modular TOPJOB®S connectors	
with CAGE CLAMP®S connection, modular, grey,	
1 pole **2004-511**	100 (4 x 25)
Spacer, for bridging over commoned terminal blocks, for example, modular, grey	
2004-549	100 (4 x 25)
❸ can be connected: 0.5 mm² – 6 mm² "s+f-st"; can be pushed in directly: 1 mm² – 6 mm² "s" and 0.75 mm² – 4 mm² "insulated ferrule, 12 mm/0.472 in"	
Item-specific accessories	
End plate, 1.5 mm/0.059 in thick	
grey **2002-541**	100 (4 x 25)
WMB Multi marking card, 10 strips with 10 markers each, white with black printing, 5 – 5.2 mm/0.197 - 0.205 in wide	
793-5 . . .	5 cards
794-5 . . .	5 cards
see Full Line Catalog W4 Volume 1, Section 14	



Snapping together of connectors and spacers to assemble a multi-pole connector



Wire connection:
Screwdriver actuation for connection of all conductor types, i.e. stripped stranded conductors, or push-in connection of solid or ferruled stranded conductors.



Snapping on a strain relief plate

Accessories for TOPJOB®S connectors

appropriate marker system **WMB/Marker strips** (see Full Line Catalog W4 Volume 1, Section 14)

Test plug, with cable 500 mm/1'7.7"	**Strain relief plate,** grey		**Marker strips,** withe, plain, on roll
2.3 mm/0.091 in Ø	snappable onto connector strips		11 mm/0.039 in wide
yellow **210-137** 50 (5 x 10)			50 m **2009-110** 1
Test plug, with cable 500 mm/1'7.7"	6 mm/0.236 in wide	**734-327** 100 (4 x 25)	**Marker strips,** withe, plain, on roll
2 mm/0.079 in Ø	12.5 mm/0.492 in wide	**734-328** 100 (4 x 25)	11 mm/0.039 in wide
red **210-136** 50 (5 x 10)	25 mm/0.984 in wide	**734-329** 100 (4 x 25)	300 m **2009-130** 1
	35 mm/1.378 in wide	**734-326** 100 (4 x 25)	

* Further approvals with corresponding ratings can be found at www.wago.com

0.25 – 1.5 (2.5) mm² ❶	AWG 22 – 14
500 V/6 kV/3	300 V, 15 A
I_N 18 A	300 V, 15 A
Terminal block width 4.2 mm / 0.165 in	
9 – 11 mm / 0.39 in	

0.25 – 2.5 (4) mm² ❷	AWG 22 – 12
500 V/6 kV/3	300 V, 20 A
I_N 24 A	300 V, 20 A
Terminal block width 5.2 mm / 0.205 in	
10 – 12 mm / 0.43 in	

0.5 – 4 (6) mm² ❸	AWG 20 – 10
500 V/6 kV/3	300 V, 30 A
I_N 32 A	300 V, 30 A
Terminal block width 6.2 mm / 0.244 in	
11 – 13 mm / 0.47 in	







Item No.	Pack.-unit pcs
Modular TOPJOB®S connector strips	
with CAGE CLAMP®S connection, modular, grey,	
2-pole **2001-552**	
3-pole **2001-553**	
4-pole **2001-554**	
5-pole **2001-555**	
6-pole **2001-556**	
7-pole **2001-557**	
8-pole **2001-558**	
9-pole **2001-559**	
10-pole **2001-560**	
❶ can be connected: 0.25 mm² – 2.5 mm² "s + f-st"; can be pushed in directly: 0.5 mm² – 2.5 mm² "s" and 0.75 mm² – 1.5 mm² "insulated ferrule, 12 mm/0.472 in"	

Item-specific accessories

WMB Multi marking card, 10 strips with 10 markers each, white with black printing, 4 – 4.2 mm/0.157 - 0.165 in wide

793-4 . . . 5 cards

794-4 . . . 5 cards

see Full Line Catalog W4 Volume 1, Section 14

Item No.	Pack.-unit pcs
Modular TOPJOB®S connector strips	
with CAGE CLAMP®S connection, modular, grey,	
2-pole **2002-552**	
3-pole **2002-553**	
4-pole **2002-554**	
5-pole **2002-555**	
6-pole **2002-556**	
7-pole **2002-557**	
8-pole **2002-558**	
9-pole **2002-559**	
10-pole **2002-560**	
❷ can be connected: 0.25 mm² – 4 mm² "s + f-st"; can be pushed in directly: 0.75 mm² – 4 mm² "s" and 0.75 mm² – 2.5 mm² "insulated ferrules, 12 mm/0.472 in"	

Item-specific accessories

WMB Multi marking card, 10 strips with 10 markers each, white with black printing, 5 – 5.2 mm/0.197 - 0.205 in wide

793-5 . . . 5 cards

794-5 . . . 5 cards

see Full Line Catalog W4 Volume 1, Section 14

Miniature WSB Quick marking card, 10 strips with 10 markers each, white with black printing, 5 mm /0.197 in wide

248- . . . 5 cards

249- . . . 5 cards

see Full Line Catalog W4 volume 1, section 14

WMB Inline, pitch 5 mm/0.197 in, strechable 5 mm – 5.2 mm/0.197 in – 0.205 in, on roll, 1,500 markers withe **2009-115** 1

Item No.	Pack.-unit pcs
Modular TOPJOB®S connector strips	
with CAGE CLAMP®S connection, modular, grey,	
2-pole **2004-552**	
3-pole **2004-553**	
4-pole **2004-554**	
5-pole **2004-555**	
❸ can be connected: 0.5 mm² – 6 mm² "s + f-st"; can be pushed in directly: 1 mm² – 6 mm² "s" and 0.75 mm² – 4 mm² "insulated ferrule, 12 mm/0.472 in"	

Item-specific accessories

WMB Multi marking card, 10 strips with 10 markers each, white with black printing, 5 – 5.2 mm/0.197 - 0.205 in wide

793-5 . . . 5 cards

794-5 . . . 5 cards

see Full Line Catalog W4 Volume 1, Section 14

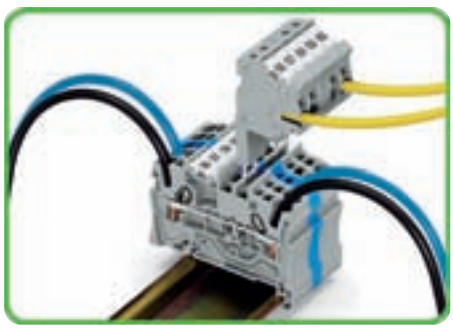

The modular connectors provide an additional connection option for conductors of the same cross section range as the terminal blocks being used.

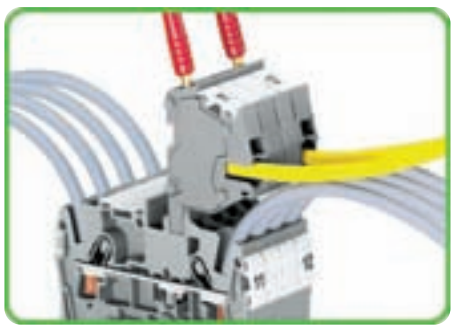

The connector has a test socket for 2 mm/0.079 in or 2.3 mm/0.091 in test plugs.

Accessories for TOPJOB®S connectors

appropriate marker system **WMB/Marker strips** (see Full Line Catalog W4 Volume 1, Section 14)

Test plug, with cable 500 mm/17.7"



2.3 mm/0.091 in ∅ yellow **210-137** 50 (5 x 10)

Test plug, with cable 500 mm/17.7"



2 mm/0.079 in ∅ red **210-136** 50 (5 x 10)

Strain relief plate, grey



snappable onto connector strips

6	mm/0.236 in wide	**734-327**	100 (4 x 25)
12.5	mm/0.492 in wide	**734-328**	100 (4 x 25)
25	mm/0.984 in wide	**734-329**	100 (4 x 25)
35	mm/1.378 in wide	**734-326**	100 (4 x 25)

Marker strips, withe, plain, on roll



11 mm/0.039 in wide 50 m **2009-110** 1

Marker strips, withe, plain, on roll



11 mm/0.039 in wide 300 m **2009-130** 1

TOPJOB®S
Double Deck Terminal Blocks 2.5 (4) mm² /AWG 12
Series 2002

0.25 – 2.5 (4) mm² ❶ | AWG 22 – 12 500 V/6 kV/3 | 600 V, 20 A I_N 24 A (28 A) | 600 V, 20 A Terminal block width 5.2 mm / 0.205 in 10 – 12 mm / 0.43 in *	0.25 – 2.5 (4) mm² ❶ | AWG 22 – 12 500 V/6 kV/3 | 600 V, 20 A I_N 24 A (28 A) | 600 V, 20 A Terminal block width 5.2 / 0.205 in 10 – 12 mm / 0.43 in *	

❶ can be connected: 0.25 mm² – 4 mm² "s+f-st";
can be pushed in directly: 0.75 mm² – 4 mm² "s" and
0.75 mm² – 2.5 mm² "insulated ferrule, 12 mm/0.472 in"

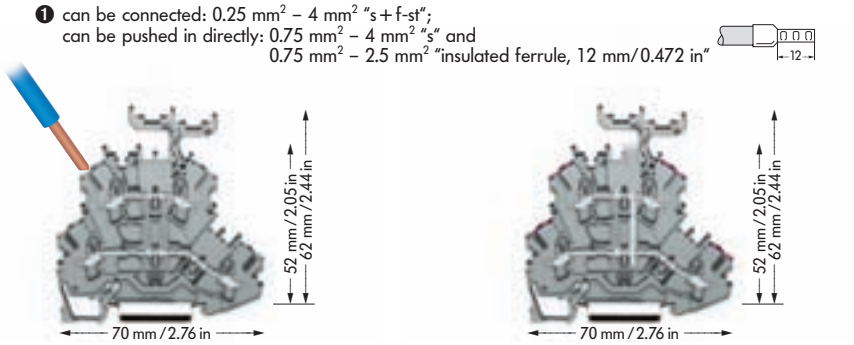

	Item No.	Item No.	Pack.-unit pcs
2-cond. double deck terminal blocks, for DIN 35 rail			
Through-/through terminal blocks,			
housing color grey			
Marking carrier with		without	
L/L	**2002-2231**	**2002-2201**	50
N/L	**2002-2232**	**2002-2202**	50
L/N	**2002-2233**	**2002-2203**	50
Housing color blue			
N/N	**2002-2234** ❷	**2002-2204** ❷	50
Ex applications are being prepared			
❷ Suitable for Ex i applications			

	Item No.	Item No.	Pack.-unit pcs
4-cond. double deck terminal blocks, for DIN 35 rail			
Through terminal block, internal commoning, housing color			
grey, conductor entry position colored in violet			
Marking carrier with		without	
L	**2002-2238**	**2002-2208**	50
4-conductor through terminal block,			
internal commoning, housing color blue,			
conductor entry position colored in violet			
N	**2002-2239** ❷	**2002-2209** ❷	50
Ex applications are being prepared			
❷ Suitable for Ex i applications			



❶ can be connected: 0.25 mm² – 4 mm² "s+f-st";
can be pushed in directly: 0.75 mm² – 4 mm² "s" and
0.75 mm² – 2.5 mm² "insulated ferrule, 12 mm/0.472 in"

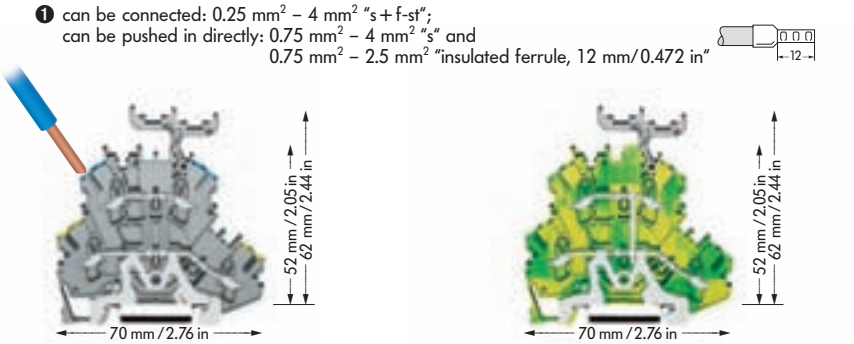

	Item No.	Item No.	Pack.-unit pcs
2-cond. double deck terminal blocks, for DIN 35 rail			
Ground (earth) conductor/through terminal block,			
Housing color grey			
Marking carrier with		without	
PE/N	**2002-2247**	**2002-2217**	50
PE/L	**2002-2257**	**2002-2227**	50
Ex applications are being prepared			

	Item No.	Item No.	Pack.-unit pcs
4-cond. double deck terminal blocks, for DIN 35 rail			
Ground (earth) terminal block,			
internal commoning			
Housing color green-yellow			
Marking carrier with		without	
PE	**2002-2237**	**2002-2207**	50
Ex applications are being prepared			

	Item No.	Pack.-unit pcs

Accessories

appropriate marking system **WMB/marker strips/WMB Inline** (see Full Line Catalog W4 Volume 1, Section 14)

End and intermediate plate, 0.8 mm/0.032 in thick



orange	**2002-2292**	100 (4 x 25)
grey	**2002-2291**	100 (4 x 25)

Push-in type jumper bars, light grey, insulated, I_N



2-way	**2002-402**	200 (8 x 25)
3-way	**2002-403**	200 (8 x 25)
4-way	**2002-404**	200 (8 x 25)
5-way	**2002-405**	100 (4 x 25)
:	:	
10-way	**2002-410**	100 (4 x 25)

Two-way marking adapter,



pivotable		
	2002-121	50 (4 x 25)

Push-in type jumper bars, light grey, insulated, I_N



1 - 3	**2002-433**	200 (8 x 25)
1 - 4	**2002-434**	200 (8 x 25)
1 - 5	**2002-435**	100 (4 x 25)
:	:	
1 - 10	**2002-440**	100 (4 x 25)

Protective warning marker,



for 5 terminal blocks		
yellow	**2002-115**	100 (4 x 25)

Marker strips, white, plain, on roll,



11 mm/0.433 in wide,		
on roll		
50 m	**2009-110**	1
300 m	**2009-130**	1

Insulation stop,
see page 17 TOPJOB®S Catalog

* Further approvals with corresponding ratings can be found at www.wago.com

Double Deck Terminal Blocks 2.5 (4) mm² /AWG 12
Series 2002

0.25 – 2.5 (4) mm²❶ | **AWG 22 – 12** **500 V/6 kV/3** | **600 V, 20 A** **I_N 24 A** | **600 V, 20 A** **Terminal block width 5.2 mm / 0.205 in** **10 – 12 mm / 0.43 in**	**0.25 – 2.5 (4) mm²❶** | **AWG 22 – 12** **500 V/6 kV/3** | **600 V, 20 A** **I_N 24 A** | **600 V, 20 A** **Terminal block width 5.2 / 0.205 in** **10 – 12 mm / 0.43 in**

❶ can be connected: 0.25 mm² – 4 mm² "s+f-st";
can be pushed in directly: 0.75 mm² – 4 mm² "s" and
0.75 mm² – 2.5 mm² "insulated ferrule, 12 mm/0.472 in"

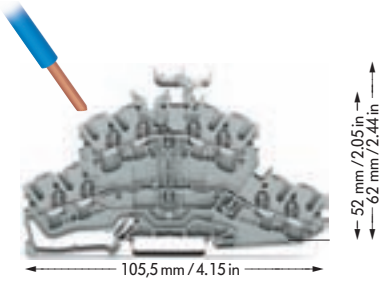

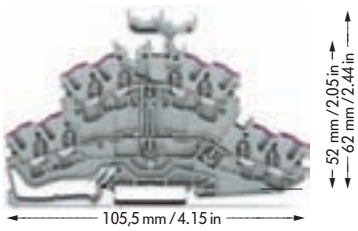

Item No.		Item No.	Pack.-unit pcs
4-cond. double deck terminal blocks, for DIN 35 rail			
Through-/through terminal blocks,			
housing color grey			
Marking carrier with		without	
L/L	**2002-2431**	**2002-2401**	50
N/L	**2002-2432**	**2002-2402**	50
L/N	**2002-2433**	**2002-2403**	50
Housing color blue			
N/N	**2002-2434**❷	**2002-2404**❷	50
Ex applications are being prepared			
❷ Suitable for Ex i applications			

Item No.		Item No.	Pack.-unit pcs
8-cond. double deck terminal blocks, for DIN 35 rail			
Through terminal block, internal commoning, housing color			
grey, conductor entry position colored in violet			
Marking carrier with		without	
L	**2002-2438**	**2002-2408**	50
Through terminal block,			
internal commoning, housing color blue,			
conductor entry position colored in violet			
N	**2002-2439**❷	**2002-2409**❷	50
Ex applications are being prepared			
❷ Suitable for Ex i applications			



❶ can be connected: 0.25 mm² – 4 mm² "s+f-st";
can be pushed in directly: 0.75 mm² – 4 mm² "s" and
0.75 mm² – 2.5 mm² "insulated ferrule, 12 mm/0.472 in"

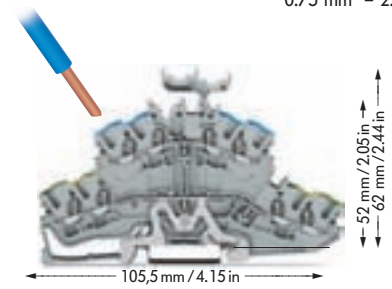

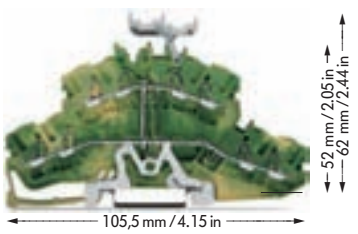

Item No.		Item No.	Pack.-unit pcs
4-cond. double deck terminal blocks, for DIN 35 rail			
Ground (earth) conductor/through terminal block,			
Housing color grey			
Marking carrier with		without	
PE/N	**2002-2447**	**2002-2417**	50
PE/L	**2002-2457**	**2002-2427**	50
Ex applications are being prepared			

Item No.		Item No.	Pack.-unit pcs
8-cond. double deck terminal blocks, for DIN 35 rail			
Ground (earth) terminal block,			
internal commoning			
Housing color green-yellow			
Marking carrier with		without	
PE	**2002-2437**	**2002-2407**	50
Ex applications are being prepared			

Item No.	Pack.-unit pcs

Accessories

appropriate marking system **WMB/marker strips/WMB Inline** (see Full Line Catalog W4 Volume 1, Section 14)

End and intermediate plate, 0.8 mm/0.032 in thick



orange	**2002-2492**	100 (4 x 25)
grey	**2002-2491**	100 (4 x 25)

Two-way marking adapter,



pivotable		
2002-121		50 (4 x 25)

Protective warning marker,



for 5 terminal blocks		
yellow	**2002-115**	100 (4 x 25)

Push-in type jumper bars, light grey, insulated, I_N



2-way	**2002-402**	200 (8 x 25)
3-way	**2002-403**	200 (8 x 25)
4-way	**2002-404**	200 (8 x 25)
5-way	**2002-405**	100 (4 x 25)
:	:	
10-way	**2002-410**	100 (4 x 25)

Push-in type jumper bars, light grey, insulated, I_N



1 - 3	**2002-433**	200 (8 x 25)
1 - 4	**2002-434**	200 (8 x 25)
1 - 5	**2002-435**	100 (4 x 25)
:	:	
1 - 10	**2002-440**	100 (4 x 25)

Marker strips, white, plain, on roll,

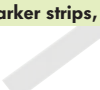

11 mm/0.433 in wide,		
on roll		
50 m	**2009-110**	1
300 m	**2009-130**	1

Insulation stop,

see page 17 TOPJOB®S Catalog

*Further approvals with corresponding ratings can be found at www.wago.com

TOPJOB®S
Triple Deck Terminal Blocks 2.5 (4) mm²/AWG 12
Series 2002

CAGE CLAMP®S

0.25 – 2.5 (4) mm² ❶	AWG 22 – 12
500 V/6 kV/3	600 V, 20 A
I_N 24 A (28 A)	600 V, 20 A

Terminal block width 5.2 / 0.205 in
10 – 12 mm / 0.43 in
*

0.25 – 2.5 (4) mm² ❶	AWG 22 – 12
500 V/6 kV/3	600 V, 20 A
I_N 24 A (28 A)	600 V, 20 A

Terminal block width 5.2 mm / 0.205 in
10 – 12 mm / 0.43 in
*

0.25 – 2.5 (4) mm² ❶	AWG 22 – 12
500 V/6 kV/3	600 V, 20 A
I_N 24 A (28 A)	600 V, 20 A

Terminal block width 5.2 mm / 0.205 in
10 – 12 mm / 0.43 in
*

❶ can be connected: 0.25 mm² – 4 mm² "s+f-st";
can be pushed in directly: 0.75 mm² – 4 mm² "s" and 0.75 mm² – 2.5 mm² "insulated ferrule, 12 mm/0.472 in"

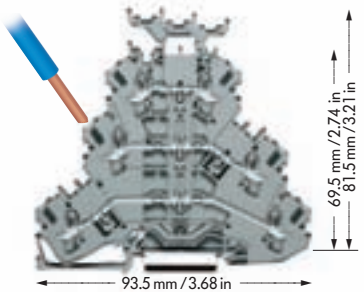

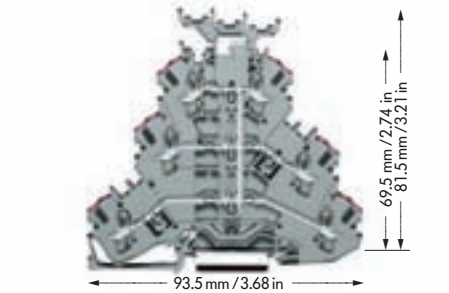

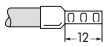

	Item No.	Item No.	Pack.-unit pcs
2-cond. triple deck terminal blocks, for DIN 35 rail			
Through-/through-/through terminal blocks,			
housing color grey			
Marking carrier with		without	
L/L/L	**2002-3231**	**2002-3201**	50
L/L/N	**2002-3233**	**2002-3203**	50
Housing color blue			
N/N/N	**2002-3234** ❷	**2002-3204** ❷	50
Ⓔx applications are being prepared			
❷ Suitable for Ex i applications			

	Item No.	Item No.	Pack.-unit pcs
6-cond. triple deck terminal block, for DIN 35 rail			
Through terminal block, internal commoning, housing color			
grey, conductor entry position colored in violet			
Marking carrier with		without	
L	**2002-3238**	**2002-3208**	50
Through terminal block,			
internal commoning, housing color blue,			
conductor entry position colored in violet			
N	**2002-3239** ❷	**2002-3209** ❷	50
Ⓔx applications are being prepared			
❷ Suitable for Ex i applications			



❶ can be connected: 0.25 mm² – 4 mm² "s+f-st";
can be pushed in directly: 0.75 mm² – 4 mm² "s" and 0.75 mm² – 2.5 mm² "insulated ferrule, 12 mm/0.472 in"

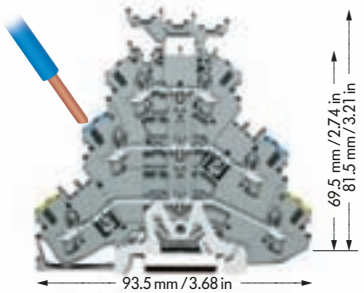

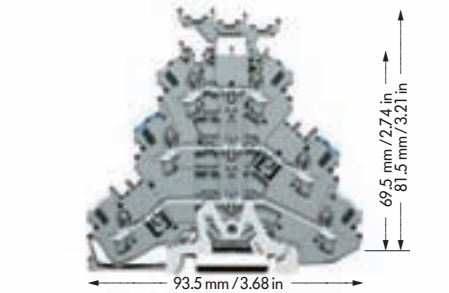

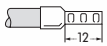

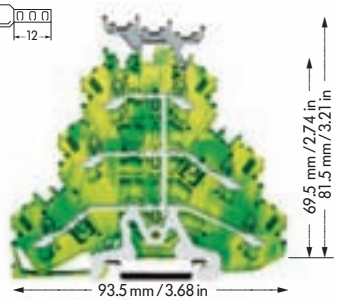

	Item No.	Item No.	Pack.-unit pcs
2-cond. triple deck terminal blocks, for DIN 35 rail			
Ground (earth)/through/through terminal blocks,			
housing color grey			
Marking carrier with		without	
PE/N/L	**2002-3247**	**2002-3217**	50
PE/L/L	**2002-3257**	**2002-3227**	50
Ⓔx applications are being prepared			

	Item No.	Item No.	Pack.-unit pcs
2-cond. triple deck terminal block, for DIN 35 rail			
Shield (screen)/through/through terminal blocks,			
housing color grey			
Marking carrier with		without	
Shield/N/L	**2002-3248**	**2002-3218**	50
Shield/L/L	**2002-3258**	**2002-3228**	50
Ⓔx applications are being prepared			

	Item No.	Item No.	Pack.-unit pcs
6-cond. triple deck terminal block, for DIN 35 rail			
Ground (earth) terminal block,			
internal commoning			
housing color green-yellow			
Marking carrier with		without	
PE	**2002-3237**	**2002-3207**	50
Ⓔx applications are being prepared			

Accessories

appropriate marking system **WMB/marker strips/WMB Inline** (see Full Line Catalog W4 Volume 1, Section 14))

End and intermediate plate, 0.8 mm/0.032 in thick



orange	**2002-3292**	100 (4 x 25)
grey	**2002-3291**	100 (4 x 25)

Three-way marking adapter,



pivotable		
2002-131		50 (2 x 25)

Protective warning marker,



for 5 terminal blocks		
yellow	**2002-115**	100 (4 x 25)

Push-in type jumper bars, light grey, insulated, I_N



2-way	**2002-402**	200 (8 x 25)
3-way	**2002-403**	200 (8 x 25)
4-way	**2002-404**	200 (8 x 25)
5-way	**2002-405**	100 (4 x 25)
:	:	
10-way	**2002-410**	100 (4 x 25)

Push-in type jumper bars, light grey, insulated, I_N



1 - 3	**2002-433**	200 (8 x 25)
1 - 4	**2002-434**	200 (8 x 25)
1 - 5	**2002-435**	100 (4 x 25)
:	:	
1 - 10	**2002-440**	100 (4 x 25)

Marker strips, white, plain, on roll,



11 mm/0.433 in wide,		
on roll		
50 m	**2009-110**	1
300 m	**2009-130**	1

Insulation stop,
see page 17 TOPJOB®S Catalog

TOPJOB®S



Very compact dimensions provide maximum wiring space in standard distribution boxes. The 2003 Series multilevel installation terminal blocks are the smallest terminal blocks with direct insertion wire connection on the market providing the full functionality of a 4 mm²/AWG 12 terminal block.



Push-in type jumper bars with breakable contact lugs offer the same benefits to the TOPJOB®S installation terminal blocks as to the rail-mounted terminal blocks (e.g. individual jumper configuration on site, skipping of potentials, etc.).



Screwless N-disconnect slide link for automatic and safe connection onto the N-busbar by simply sliding the link.



The busbar carrier with end stop function, which is only **7.5 mm / 0.295 in wide** can replace end stop.

The detachable separator plate on the carrier can be used both for separating the different potentials of N-busbars that are directly next to each other or as a touch-proof end plate for an N-busbar.

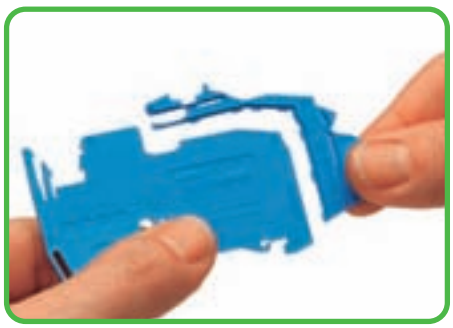

The compact busbar carrier, which is placed every 200 mm / 7.87 in, is used to additionally support the busbar on a long assembly.

Perforations make it possible to fit the carrier to all TOPJOB®S installation terminal blocks using a single part.

Each connection point has an individual marker receptacle for WMB markers. Additionally, the upper marker receptacle is suitable for marker strips that can be marked manually using a marker pen or automatically by a thermal transfer printer.



Commoning is done using the new staggered jumper system in one single TOPJOB®S jumper slot. The multilevel installation terminal blocks of Series 2003 are therefore suitable for use in very confined spaces.



The optional busbar transparent cover (item no. 777-303) protects the busbar against accidental contact and makes it easy to see which terminal blocks are connected to the busbar.

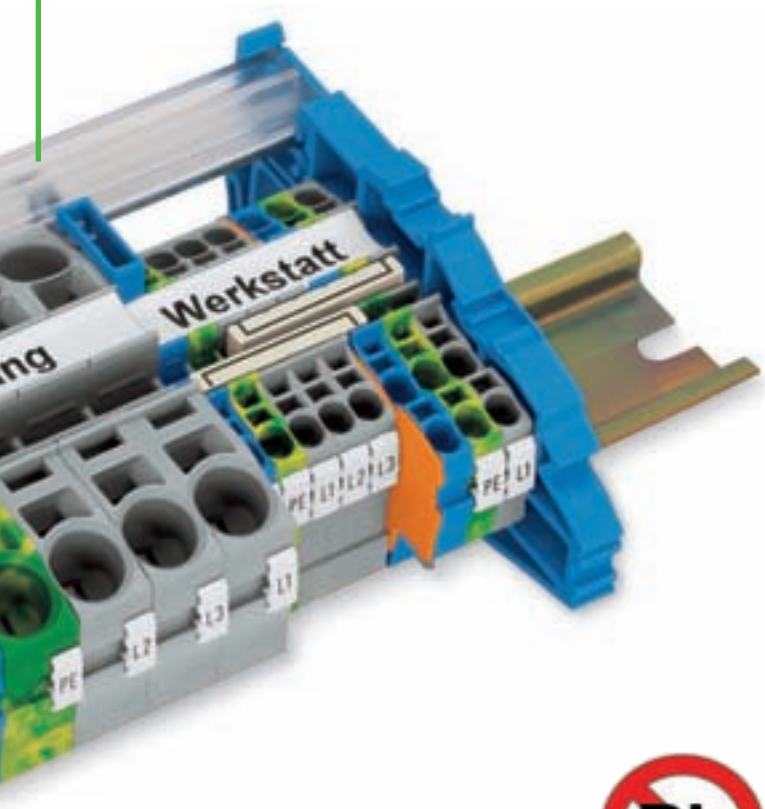

Removal of staggered jumpers
Insert the screwdriver blade between the jumpers and lift them up.

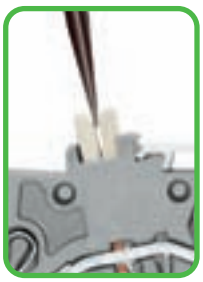

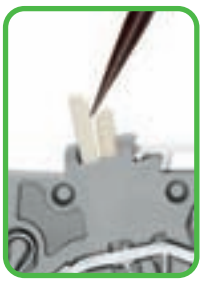



Environmentally friendly:
TOPJOB®S terminal blocks are **100 % lead-free!**

The conductor entry holes of the multilevel installation terminal blocks are color marked, providing a clear arrangement of the terminals.

The grounding foot automatically guarantees a safe connection to the carrier rail.

TOPJOB®S – The range of terminal blocks for all types of applications.



- The direct connection of solid wires in small distribution boxes saves time and money.
- Operating errors can be prevented as all types of terminal blocks for building installation are equipped with push-in connection technology.
- Terminal blocks for building installation expand circuit design possibilities.
- The use of standard accessories reduces order-processing and stock-holding costs.
- A high level of application safety is achieved through optimum knowledge of the small range of parts.
- As the position of the busbars is the same, the new TOPJOB®S installation terminal blocks are compatible with standard topJob installation terminal blocks.

TOPJOB®S
Multilevel Installation Terminal Blocks 4 mm²/AWG 12 Series 2003

0.25 – 2.5 (4) mm² ❶ AWG 22 – 12
250 V/4 kV ❷/3 400 V/6 kV ❸/3
I_N 32 A
Terminal block width 5.2 mm / 0.205 in
10 – 12 mm / 0.43 in

0.25 – 2.5 (4) mm² ❶ AWG 22 – 12
400 V/6 kV/3
I_N 32 A
Terminal block width 5.2 mm / 0.205 in
10 – 12 mm / 0.43 in

Accessories for 2003 Series multilevel installation terminal blocks and 2002/2006/2016 Series N-conductor disconnect terminal blocks

❶ can be connected: 0.25 mm² – 4 mm² "s + f-st";
can be pushed in directly: 0.75 mm² – 4 mm² "s" and
0.75 mm² – 2.5 mm² "insulated ferrule, 12 mm / 0.472 in"



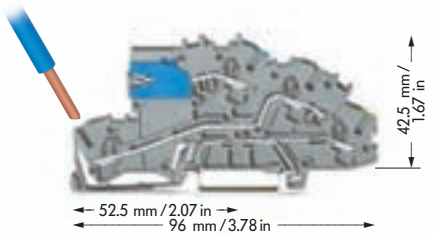

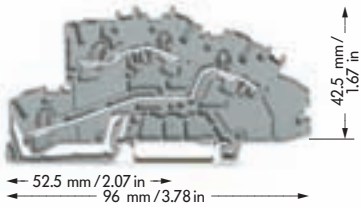

	Item No.	Pack.-unit pcs
Multilevel installation terminal block, grey		
with N-disconnect slide link		
NT/L/PE	**2003-7641**	50

❷ Potential-Ground ❸ Potential-Potential

	Item No.	Pack.-unit pcs
Multilevel installation terminal blocks, grey		
L/L	**2003-7642**	50
N/L	**2003-7649**	50

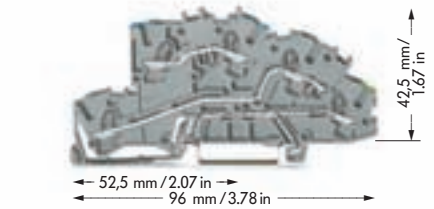

	Item No.	Pack.-unit pcs
Multilevel installation terminal blocks, grey		
N/L/PE	**2003-7646**	50
L/L/PE	**2003-7645**	50

Commoning using staggered jumpers

Individual jumper contacts can be broken off by bending them. The remaining piece of insulation meets the requirements for the air and creepage distance.

This makes it possible to create custom staggered jumpers, e.g. for bridging over a terminal block with a different potential. When creating the jumpers, make sure that only one contact lug is in contact with the terminal block.

That way, staggered jumpers are created whose contact lugs will make contact to the terminal block in the gaps of the second jumper. Insert the jumper into the jumper slot up to the stop.



Staggered jumper with 7 contacts
Breaking off contact lugs



Staggered jumper 1 – 3 – 5 – 7
Marking with a felttip pen



Two staggered jumpers 1 – 3 – 5 – 7
staggered for use in a jumper slot

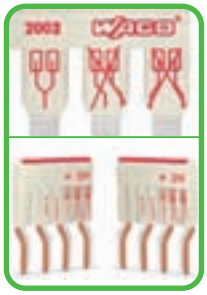

Locate red stripes of the **staggered jumpers** on the inside

	Item No.	Pack.-unit pcs
End and intermediate plate, 1 mm / 0.039 in thick		
orange	**2003-7692**	100 (4 x 25)
Busbar carrier, for DIN rail 35 (not suitable for use as end stop)		
1.5 mm / 0.059 in thick		
blue	**2009-304**	100 (4 x 25)
Busbar carrier with end stop function and detachable separator plate, for DIN rail 35; 7.5 mm / 0.295 in thick		
blue	**2009-305**	25
N-busbar, tinned		see page 15
Cover for N-busbar, transparent		see page 15
Neutral supply terminal block, I_N 76 A, 16 mm²/AWG 6, blue, 12 mm / 0.472 in wide	**2016-7114**	25
Ground (earth) supply terminal block, I_N 76 A, 16 mm²/AWG 6, green-yellow, 12 mm / 0.472 in wide	**2016-1207**	20
TOPJOB®S **tool,** special blades 3.5 mm / 0.137 in and 5.5 mm / 0.217 in	**2009-310**	1
Connector, with blue cover		see page 11
Connector, uninsulated,		see page 11
Push-in type jumper bars, light grey, insulated, I_N 25 A		
2-way	**2002-402**	200 (8 x 25)
3-way	**2002-403**	200 (8 x 25)
4-way	**2002-404**	200 (8 x 25)
5-way	**2002-405**	100 (4 x 25)
:	:	
10-way	**2002-410**	100 (4 x 25)
Push-in type jumper bars, light grey, insulated, I_N 25 A		
1 - 3	**2002-433**	200 (8 x 25)
1 - 4	**2002-434**	200 (8 x 25)
1 - 5	**2002-435**	100 (4 x 25)
:	:	
1 - 10	**2002-440**	100 (4 x 25)
Staggered jumper, light grey, insulated, I_N 25 A		
2-way	**2002-472**	100 (4 x 25)
3-way	**2002-473**	100 (4 x 25)
4-way	**2002-474**	100 (4 x 25)
5-way	**2002-475**	50 (2 x 25)
:	:	
12-way	**2002-482**	50 (2 x 25)
Pre-assembled staggered jumpers, with contact lugs that are factory removed with circuit printing, I_N 25 A		
1-3	**2002-473/0011-0000**	
1-3-5	**2002-475/0011-0000**	
1-3-5-7	**2002-477/0011-0000**	
1-3-5-7-9	**2002-479/0011-0000**	
1-3-5-7-9-11	**2002-481/0011-0000**	
Test plug, Ø 2 mm / 0.079 in	**210-136**	50 (5 x 10)
Test plug adapter, for test plug Ø 4 mm / 0.157 in	**2009-174**	100 (4 x 25)
Testing tap, for max. 2.5 mm²/AWG 14	**2009-182**	100 (4 x 25)

0.5 – 4 (6) mm² ❶ AWG 20 – 10
250 V/4 kV ❷/3 400 V/6 kV ❸/3
I_N 36 A
Terminal block width 6.2 mm / 0.244 in
11 – 13 mm / 0.47 in

0.5 – 4 (6) mm² ❶ AWG 20 – 10
400 V/6 kV/3
I_N 36 A
Terminal block width 6.2 mm / 0.244 in
11 – 13 mm / 0.47 in

Accessories for
2005 Series multilevel installation terminal blocks and
2002/2006/2016 Series N-conductor disconnect terminal blocks

❶ can be connected: 0.5 mm² – 6 mm² "s+f-st";
can be pushed in directly: 1 mm² – 6 mm² "s" and
0.75 mm² – 4 mm² "insulated ferrule, 12 mm / 0.472 in"

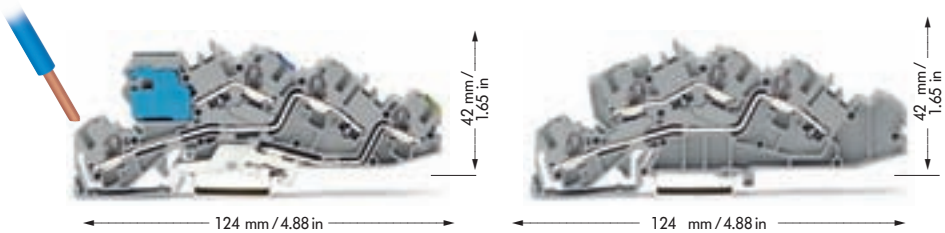

	Item No.	Pack.-unit pcs
Multilevel installation terminal block, grey		
with N-disconnect slide link		
NT/L/PE	**2005-7641**	50

❷ Potential-Ground ❸ Potential-Potential

	Item No.	Pack.-unit pcs
Multilevel installation terminal blocks, grey		
L/L	**2005-7642**	50
N/L	**2005-7649**	50



	Item No.	Pack.-unit pcs
Multilevel installation terminal blocks, grey		
N/L/PE	**2005-7646**	50
L/L/PE	**2005-7645**	50

	Item No.	Pack.-unit pcs
End and intermediate plate, 1 mm / 0.039 in thick		
orange	**2005-7692**	100 (4 x 25)
Busbar carrier, for DIN rail 35 (not suitable for use as end stop)		
1.5 mm / 0.059 in thick		
blue	**2009-304**	100 (4 x 25)
Busbar carrier with end stop function and detachable separator plate, for DIN rail 35; 7.5 mm / 0.295 in thick		
blue	**2009-305**	25
N-busbar, tinned		
Copper 10 mm x 3 mm, I_N 140 A, 1000 mm / 39.37 in long	**210-133**	20 (20 x 1)
Cover for N-busbar		
transparent		
1000 mm / 39.37 in long	**777-303**	1
Neutral supply terminal block, I_N 76 A, 16 mm², blue		
12 mm / 0.472 in wide	**2016-7114**	25
Ground (earth) supply terminal block, I_N 76 A, 16 mm²/AWG 6, green-yellow, 12 mm / 0.472 in wide	**2016-1207**	20
14 Connector, with blue cover, for N-busbar		
2.5 mm² – 16 mm²/AWG 14 – 6	**210-281**	100 (2 x 50)
Connector, uninsulated, for N-busbar		
2.5 mm² – 35 mm²/AWG 14 – 2	**209-105**	50 (2 x 25)
TOPJOB®S **tool,** special blades		
3.5 mm / 0.137 in and 5.5 mm / 0.217 in	**2009-310**	1
Push-in type jumper bars, light grey, insulated, I_N 32 A		
2-way	**2004-402**	100 (4 x 25)
3-way	**2004-403**	100 (4 x 25)
4-way	**2004-404**	100 (4 x 25)
5-way	**2004-405**	50 (2 x 25)
:	:	
10-way	**2004-410**	50 (2 x 25)
Push-in type jumper bars, light grey, insulated, I_N 32 A		
1 - 3	**2004-433**	100 (4 x 25)
1 - 4	**2004-434**	100 (4 x 25)
1 - 5	**2004-435**	50 (2 x 25)
:	:	
1 - 10	**2004-440**	50 (2 x 25)
Test plug, Ø 2 mm / 0.079 in	**210-136**	50 (5 x 10)
Test plug adapter, for test plug Ø 4 mm / 0.157 in	**2009-174**	100 (4 x 25)
Testing tap, for max. 2.5 mm²/AWG 14	**2009-182**	100 (4 x 25)

TOPJOB®S
N-Disconnect Terminal Blocks and Power Distribution Disconnect Terminal Blocks Series 2002, 2006 and 2016

0.25 – 2.5 (4) mm² ❶ | AWG 22 – 12 250 V/4 kV/3 I_N 32 A	0.5 – 6 (10) mm² ❶ | AWG 20 – 8 250 V/4 kV/3 I_N 51 A	0.5 – 16 (25 "f") mm² ❶ | AWG 20 – 4 250 V/4 kV/3 I_N 76 A
Terminal block width 5.2 mm / 0.205 in	Terminal block width 7.5 mm / 0.295 in	Terminal block width 12 mm / 0.472 in
10 – 12 mm / 0.43 in	13 – 15 mm / 0.55 in	18 – 20 mm / 0.75 in

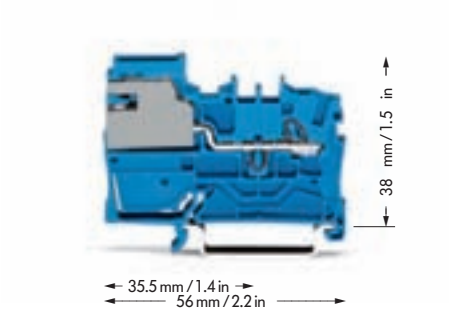

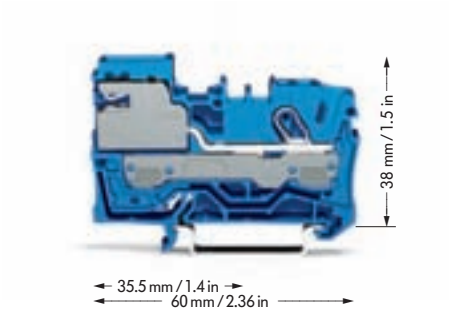

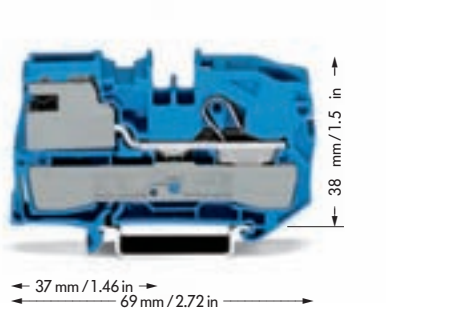

	Item No.	Pack.-unit pcs
1-conductor N-disconnect terminal block		
blue	**2002-7114** ❷	50
1-conductor power distribution disconnect terminal block		
grey	**2002-7111** ❸	50
End and intermediate plate, 0.8 mm / 0.031 in thick		
orange	**2002-7192**	100 (4 x 25)
For appropriate through and earth conductor terminal blocks see page 17 in TOPJOB®S catalog		

	Item No.	Pack.-unit pcs
1-conductor N-disconnect terminal block		
blue	**2006-7114** ❷	50
1-conductor power distribution disconnect terminal block		
grey	**2006-7111** ❸	50
End and intermediate plate, 1 mm / 0.039 in thick		
orange	**2006-7192**	100 (4 x 25)
For appropriate through and earth conductor terminal blocks see page 19 in TOPJOB®S catalog		

	Item No.	Pack.-unit pcs
1-conductor N-disconnect terminal block		
blue	**2016-7114** ❷	25
1-conductor power distribution disconnect terminal block		
grey	**2016-7111** ❸	25
End and intermediate plate, 1 mm / 0.039 in thick		
orange	**2016-7192**	100 (4 x 25)
For appropriate through and earth conductor terminal blocks see page 21 in TOPJOB®S catalog		


Testing with test plug Ø 2 mm


Operation of the slide link using a simple screwdriver

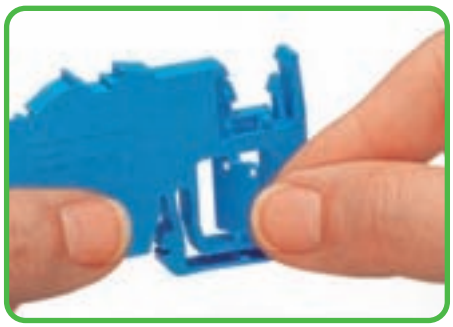
Removing the separator plate from the busbar carrier.


Insertion of the separator plate.
To protect the N-busbar against accidental contact

❶ see also appropriate through terminal blocks

❷ For the construction and operation of power installations in fire hazardous locations or public buildings, such as meeting places, stores, hospitals, schools, theaters, hotels etc., the VDE 0100 or VDE 0108-1 standards must be observed. VDE 0100-482 must be observed for fire hazardous locations. Both VDE regulations determine that insulation testing must be possible for every circuit without disconnecting the N-conductor.
WAGO N-disconnect terminal blocks meet this requirement.

❸ According to VDE 0107 "Installing and testing electrical installations in medical locations", the equipotential bonding conductors must be connected to a potential equalization busbar. The potential equalization busbar and the protective earth conductor busbar must be accommodated in a common housing and be connected by means of a disconnectable connection using a copper conductor with a minimum cross section of 16 mm²/AWG 6. Furthermore, all equipotential bonding conductors must be connected to the potential equalization busbar in such a way that they are clearly arranged, that they can be disconnected individually and accessed at any time and, depending on their function, they must be provided with captive marking.
The WAGO power distribution disconnect terminal blocks meet these requirements.

TOPJOB®S

Movable knife disconnects clearly indicate the circuit state.

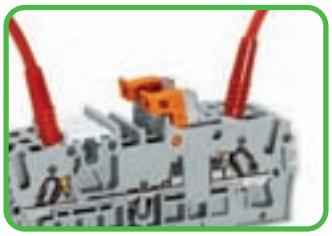

2- and 4-conductor disconnect terminal blocks

The 5.2 mm/0.205 in wide 2- and 4-conductor disconnect terminal blocks, that can be used in both control and process measurement systems as well as transformer circuits, are an addition to the range of TOPJOB®S rail-mounted terminal blocks.

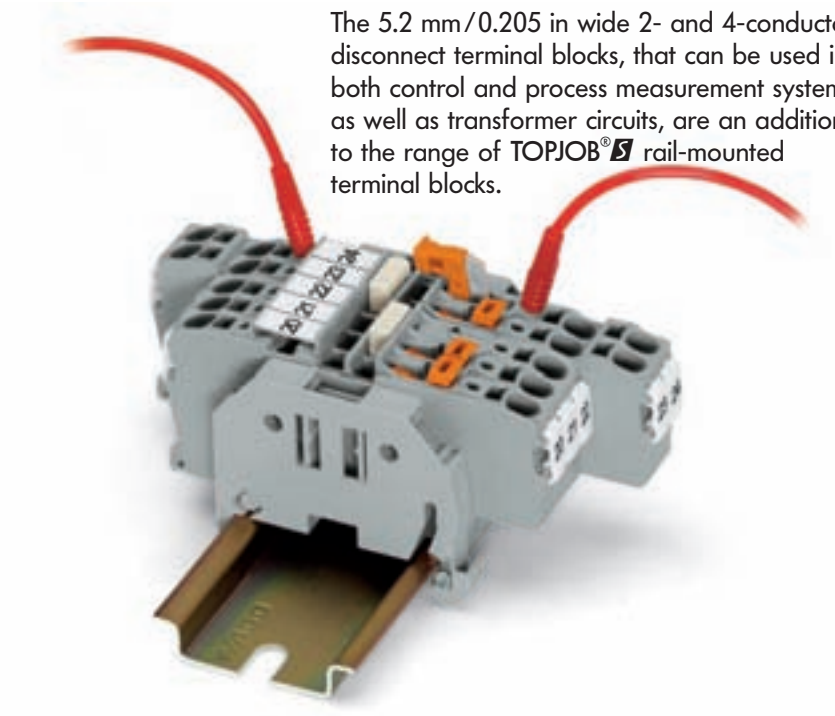



Two lateral and one center marker receptacle for WMB markers or marking strips. Dual jumper slots, in the same position as the other 2002 Series terminal blocks. Commoning options in front of or behind the knife disconnect, depending on which is the power supply side.



Additional marking option using pivoting marking adapters.

Double deck double disconnect terminal blocks

Disconnect terminal blocks of independent potentials are accommodated on two levels in a double deck disconnect terminal block. This results in a space saving arrangement without compromising the clarity of operation. The knife disconnects are located between the conductors and are therefore always in full view of the operator.

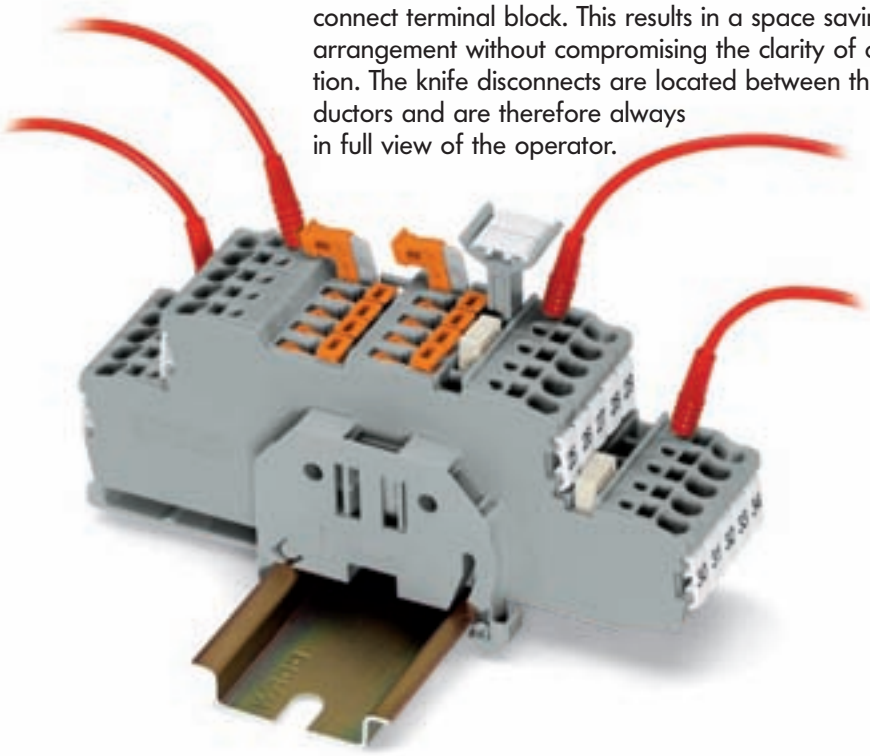

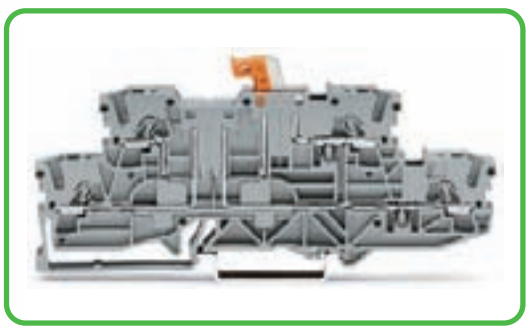

One disconnect and one through terminal block are accommodated on two levels in a terminal block that is only 5.2 mm/0.205 in wide.

Diode terminal blocks



These diode terminal blocks have been specially developed for custom diode circuits such as lamp test and collective fault signal circuits.

Using LED terminal blocks, monitoring units can be designed for control and operating circuits.

The terminal blocks provide high density wiring maintaining a width of only 5.2 mm / 0.205 in.

Using push-in type jumper bars opens up additional possibilities when designing custom circuits.

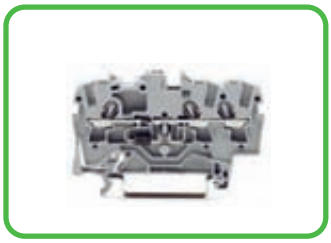

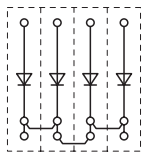

Polarized diode gate, common cathode

Double deck diode terminal blocks

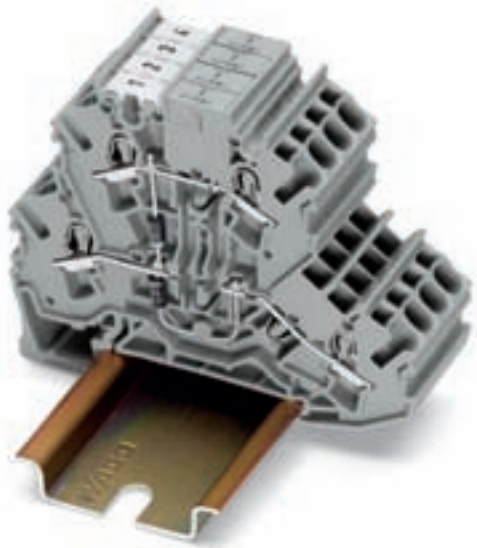

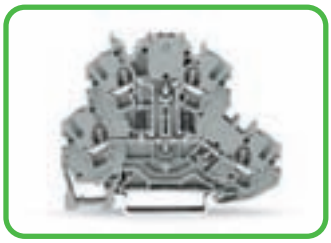



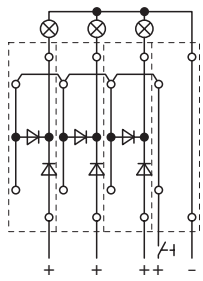

Lamp test circuit

Triple deck diode terminal blocks

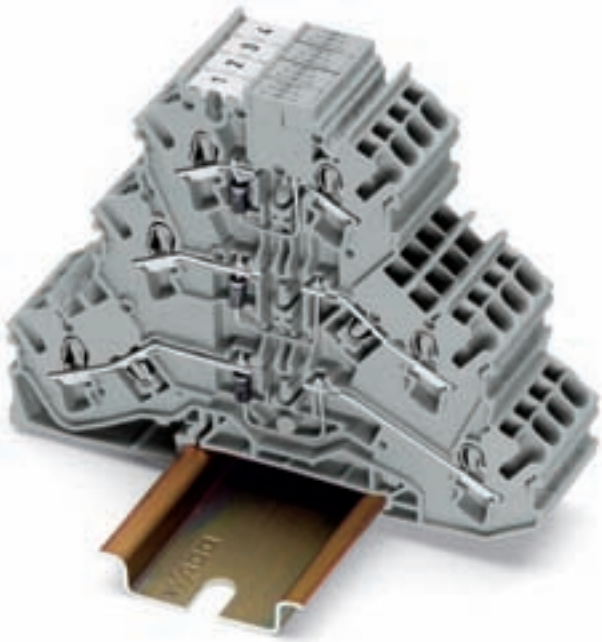





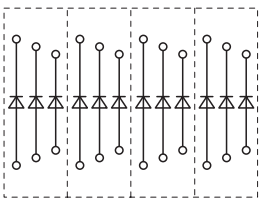

Open diode gate, can be connected individually. Using push-in type jumper bars, individual levels can be turned into polarized diode gates.

TOPJOB®S
Disconnect Terminal Blocks for Test and Measurement with Movable Knife Disconnect and Through Terminal Blocks, Series 2002

0.25 – 2.5 (4) mm²❶ | **AWG 22 – 12** **400 V/6 kV/3** **I_N 16 A** **Terminal block width 5.2 mm / 0.205 in** **10 – 12 mm / 0.43 in**	**0.25 – 2.5 (4) mm²❶** | **AWG 22 – 12** **400 V/6 kV/3** **I_N 16 A** **Terminal block width 5.2 mm / 0.205 in** **10 – 12 mm / 0.43 in**

❶ can be connected: 0.25 mm² – 4 mm² "s + f-st";
can be pushed in directly: 0.75 mm² – 4 mm² "s" and
0.75 mm² – 2.5 mm² "insulated ferrule, 12 mm / 0.472 in"

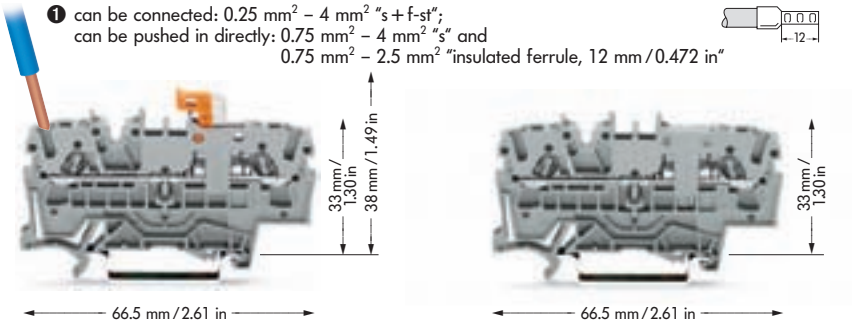

	Item No.	Pack.-unit pcs
2-conductor disconnect terminal block for test and measurement		
grey	**2002-1671**	
blue	**2002-1674**	
orange	**2002-1672**	
2-conductor through terminal blocks, same profile as disconnect terminal block		
grey	**2002-1601**	
blue	**2002-1604**	
orange	**2002-1602**	

Item-specific accessories

		Item No.	Pack.-unit pcs
End and intermediate plate, 1 mm / 0.039 in thick			
	orange	**2002-1692**	100 (4 x 25)
	grey	**2002-1691**	100 (4 x 25)
End and intermediate plate, 1 mm / 0.039 in thick			
	orange	**2002-1692**	100 (4 x 25)
	grey	**2002-1691**	100 (4 x 25)

Accessories Series 2002

appropriate marker system **WMB/Marker strips/WMB Inline** (see Full Line Catalog W4 Volume 1, Section 14)

		Item No.	Pack.-unit pcs
Insulation stop, 5 pcs/strip			200 strips
	light grey	**2002-171**	0.25-0.5 mm²
	dark grey	**2002-172**	0.75-1 mm²
Protective warning marker,			
	for 5 terminal blocks		
	yellow	**2002-115**	100 (4 x 25)
Push-in type jumper bars, light grey, insulated, I_N 25 A			
	2-way	**2002-402**	200 (8 x 25)
	3-way	**2002-403**	200 (8 x 25)
	4-way	**2002-404**	200 (8 x 25)
	5-way	**2002-405**	100 (4 x 25)
	:	:	
	10-way	**2002-410**	100 (4 x 25)
Staggered jumper, light grey, insulated, I_N 25 A			
	2-way	**2002-472**	100 (4 x 25)
	3-way	**2002-473**	100 (4 x 25)
	4-way	**2002-474**	100 (4 x 25)
	5-way	**2002-475**	50 (2 x 25)
	:	:	
	12-way	**2002-482**	50 (2 x 25)
Push-in type jumper bars, light grey, insulated, I_N 25 A			
	1 - 3	**2002-433**	200 (8 x 25)
	1 - 4	**2002-434**	200 (8 x 25)
	1 - 5	**2002-435**	100 (4 x 25)
	:	:	
	1 - 10	**2002-440**	100 (4 x 25)
Test plug adapter, for test plug Ø 4 mm / 0.157 in			
		2009-174	100 (4 x 25)
Testing tap, for max. 2.5 mm²/AWG 14			
		2009-182	100 (4 x 25)
Modular TOPJOB®S connector,			
	for jumper contact slot		
	1 pole	**2002-511**	100 (4 x 25)
Two-way marking adapter,			
	pivotable		
		2002-121	50 (4 x 25)
Spacer, modular		**2002-549**	100 (4 x 25)
Test plug, with cable 500 mm / 1'7.7"			
	Ø 2 mm / 0.079 in		
	red	**210-136**	50 (5 x 10)

Disconnect Terminal Blocks for Test and Measurement with Movable Knife Disconnect and Through Terminal Blocks, Series 2002

0.25 – 2.5 (4) mm²❶ | **AWG 22 – 12** **400 V/6 kV/3** **I_N 16 A** **Terminal block width 5.2 mm / 0.205 in** **10 – 12 mm / 0.43 in**	**0.25 – 2.5 (4) mm²❶** | **AWG 22 – 12** **400 V/6 kV/3** **I_N 16 A** **Terminal block width 5.2 mm / 0.205 in** **10 – 12 mm / 0.43 in**

❶ can be connected: 0.25 mm² – 4 mm² "s+f-st";
can be pushed in directly: 0.75 mm² – 4 mm² "s" and
0.75 mm² – 2.5 mm² "insulated ferrule, 12 mm / 0.472 in"

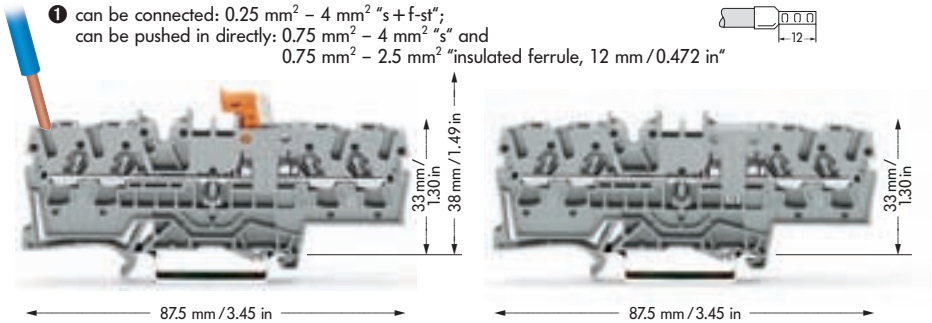

	Item No.	Pack.-unit pcs
4-conductor disconnect terminal block for test and measurement		
grey	**2002-1871**	
blue	**2002-1874**	
orange	**2002-1872**	
4-conductor through terminal blocks, same profile as disconnect terminal block		
grey	**2002-1801**	
blue	**2002-1804**	
orange	**2002-1802**	

Item-specific accessories

End and intermediate plate, 1 mm / 0.039 in thick



orange	**2002-1892**	100 (4 x 25)
grey	**2002-1891**	100 (4 x 25)

End and intermediate plate, 1 mm / 0.039 in thick



orange	**2002-1892**	100 (4 x 25)
grey	**2002-1891**	100 (4 x 25)

Accessories Series 2002

appropriate marker system **WMB/Marker strips/WMB Inline** (see Full Line Catalog W4 Volume 1, Section 14)

Insulation stop, 5 pcs/strip — 200 strips



light grey	**2002-171**	0.25-0.5 mm²
dark grey	**2002-172**	0.75-1 mm²

Protective warning marker,



for 5 terminal blocks

yellow	**2002-115**	100 (4 x 25)

Push-in type jumper bars, light grey, insulated, I_N 25 A



2-way	**2002-402**	200 (8 x 25)
3-way	**2002-403**	200 (8 x 25)
4-way	**2002-404**	200 (8 x 25)
5-way	**2002-405**	100 (4 x 25)
:	:	
10-way	**2002-410**	100 (4 x 25)

Staggered jumper, light grey, insulated, I_N 25 A



2-way	**2002-472**	100 (4 x 25)
3-way	**2002-473**	100 (4 x 25)
4-way	**2002-474**	100 (4 x 25)
5-way	**2002-475**	50 (2 x 25)
:	:	
12-way	**2002-482**	50 (2 x 25)

Push-in type jumper bars, light grey, insulated, I_N 25 A



1 - 3	**2002-433**	200 (8 x 25)
1 - 4	**2002-434**	200 (8 x 25)
1 - 5	**2002-435**	100 (4 x 25)
:	:	
1 - 10	**2002-440**	100 (4 x 25)

Test plug adapter, for test plug Ø 4 mm / 0.157 in



2009-174 100 (4 x 25)

Testing tap, for max. 2.5 mm²/AWG 14

2009-182 100 (4 x 25)

Modular TOPJOB®S connector,**



for jumper contact slot

1 pole	**2002-511**	100 (4 x 25)

Two-way marking adapter,



pivotable

2002-121 50 (4 x 25)

Spacer, modular — **2002-549** 100 (4 x 25)

Test plug, with cable 500 mm / 17.7"



Ø 2 mm / 0.079 in

red	**210-136**	50 (5 x 10)

TOPJOB®S
Double Deck Double Disconnect Terminal Blocks for Test and Measurement with Movable Knife Disconnect, Series 2002

0.25 – 2.5 (4) mm²❶ | AWG 22 – 12 **400 V/6 kV/3** **I_N 16 A** **Terminal block width 5.2 mm / 0.205 in** **10 – 12 mm / 0.43 in**	**0.25 – 2.5 (4) mm²❶ | AWG 22 – 12** **400 V/6 kV/3** **I_N 16 A** **Terminal block width 5.2 mm / 0.205 in** **10 – 12 mm / 0.43 in**	**0.25 – 2.5 (4) mm²❶ | AWG 22 – 12** **400 V/6 kV/3** **I_N 16 A** **Terminal block width 5.2 mm / 0.205 in** **10 – 12 mm / 0.43 in**

❶ can be connected: 0.25 mm² – 4 mm² "s+f-st";
can be pushed in directly: 0.75 mm² – 4 mm² "s" and 0.75 mm² – 2.5 mm² "insulated ferrule, 12 mm/0.472 in"

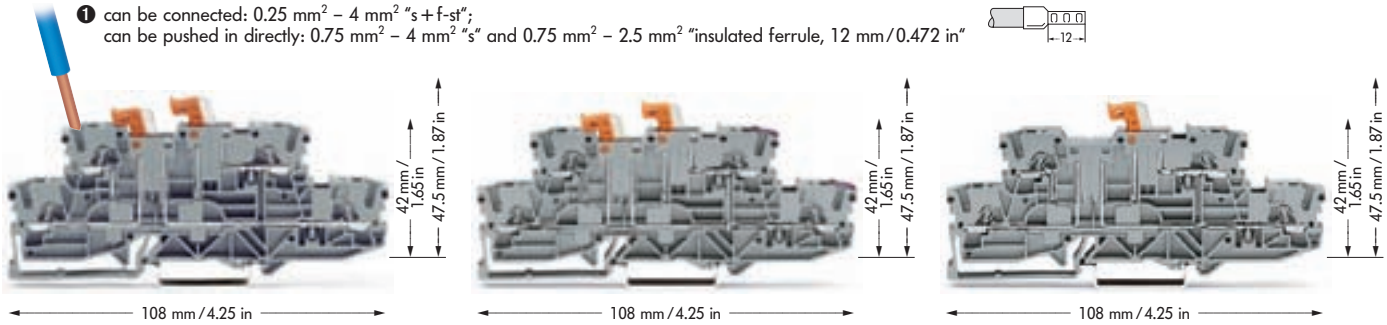

Item No.	Pack.-unit pcs
4-conductor double deck double disconnect terminal blocks	
grey	**2002-2951**
blue	**2002-2954**
grey N/L	**2002-2952**
4-conductor double deck double disconnect terminal blocks, lower deck and upper deck internally commoned on right side and with violet marking	
grey	**2002-2958**
blue	**2002-2959**
4-conductor double deck disconnect terminal blocks, with disconnect on uper deck only, same profile as double deck double disconnect terminal blocks	
grey	**2002-2971**
blue	**2002-2974**
grey N/L	**2002-2972**

Item-specific accessories

	Item No.	Pack.-unit pcs
End and intermediate plate, 1 mm / 0.039 in thick		
orange	**2002-2992**	100 (4 x 25)
grey	**2002-2991**	100 (4 x 25)

Accessories Series 2002

appropriate marker system **WMB/Marker strips/WMB Inline** (see also Full Line Catalog W4 Volume 1, Section 14)

	Item No.	Pack.-unit pcs
Insulation stop, 5 pcs/strip		200 strips
light grey	**2002-171**	0.25-0.5 mm²
dark grey	**2002-172**	0.75-1 mm²
Protective warning marker, for 5 terminal blocks		
yellow	**2002-115**	100 (4 x 25)
Test plug, with cable 500 mm / 1'7.7" Ø 2 mm / 0.079 in		
red	**210-136**	50 (5 x 10)
Push-in type jumper bars, light grey, insulated, I_N 25 A		
2-way	**2002-402**	200 (8 x 25)
3-way	**2002-403**	200 (8 x 25)
4-way	**2002-404**	200 (8 x 25)
5-way	**2002-405**	100 (4 x 25)
:	:	
10-way	**2002-410**	100 (4 x 25)
Push-in type jumper bars, light grey, insulated, I_N 25 A		
1 - 3	**2002-433**	200 (8 x 25)
1 - 4	**2002-434**	200 (8 x 25)
1 - 5	**2002-435**	100 (4 x 25)
:	:	
1 - 10	**2002-440**	100 (4 x 25)
Staggered jumper, light grey, insulated, I_N 25 A		
2-way	**2002-472**	100 (4 x 25)
3-way	**2002-473**	100 (4 x 25)
4-way	**2002-474**	100 (4 x 25)
5-way	**2002-475**	50 (2 x 25)
:	:	
12-way	**2002-482**	50 (2 x 25)
Modular TOPJOB®S connector,** for jumper contact slot		
1 pole	**2002-511**	100 (4 x 25)
Spacer, modular	**2002-549**	100 (4 x 25)
Test plug adapter, for test plug Ø 4 mm / 0.157 in	**2009-174**	100 (4 x 25)
Testing tap, for max. 2.5 mm²/AWG 14	**2009-182**	100 (4 x 25)

Diode Terminal Blocks 1.5 (2.5) mm² / AWG 14 and LED Terminal Blocks 1.5 (2.5) mm² / AWG 14; Series 2001

0.25 – 1.5 (2.5) mm² | AWG 22 – 14 **U_N 250 V; U_{RM} 1000 V** **1 N 4007 – 0.5 A continuous current** **Terminal block width 4.2 mm / 0.165 in** **9 – 11 mm / 0.39 in**	**0,25 – 1,5 (2.5) mm² | AWG 22 – 14** **U_N 250 V; U_{RM} 1000 V** **1 N 4007 – 0.5 A continuous current** **Terminal block width 4.2 mm / 0.165 in** **9 – 11 mm / 0.39 in**	**0.25 – 1.5 (2.5) mm² | AWG 22 – 14** **DC 24 V** **I_F 0.025 A max.** **Terminal block width 4.2 mm / 0.165 in** **9 – 11 mm / 0.39 in**

❶ can be connected: 0.25 mm² – 4 mm² "s + f-st";
can be pushed in directly: 0.5 mm² – 2.5 mm² "s" and 0.75 mm² – 1.5 mm² "insulated ferrule, 12 mm / 0.472 in"

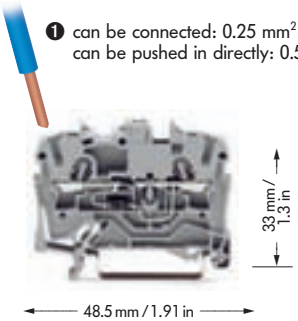

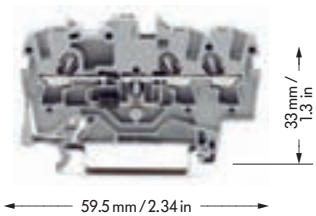

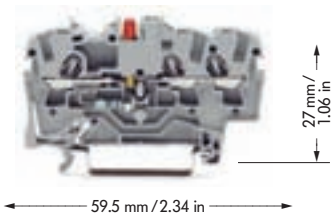

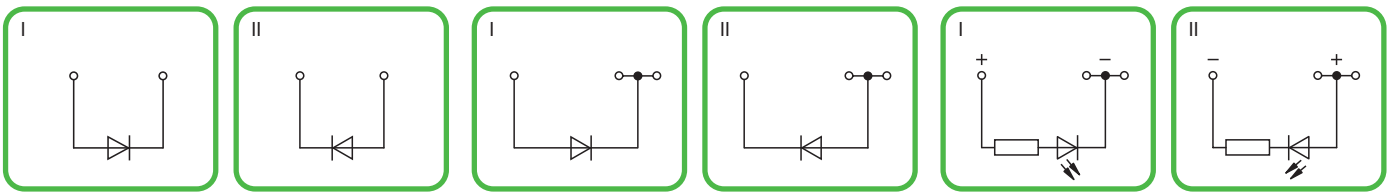

	Item No.	Pack.-unit pcs
2-cond. diode term. blocks with diode 1 N 4007		
Circuit I, grey	**2001-1211/1000-410**	100
Circuit II, grey	**2001-1211/1000-411**	100
Examples of circuit configuration see page see 25		
Through terminal block with the same shape		
grey	**2001-1201**	
End and intermediate plate, 0.8 mm / 0.032 in thick		
orange	**2002-1292**	100 (4 x 25)
grey	**2002-1291**	100 (4 x 25)

	Item No.	Pack.-unit pcs
3-cond. diode term. blocks with diode 1 N 4007		
Circuit I, grey	**2001-1311/1000-410**	100
Circuit II, grey	**2001-1311/1000-411**	100
Examples of circuit configuration see page see 25		
Through terminal block with the same shape		
grey	**2001-1301**	
End and intermediate plate, 0.8 mm / 0.032 in thick		
orange	**2002-1392**	100 (4 x 25)
grey	**2002-1391**	100 (4 x 25)

	Item No.	Pack.-unit pcs
3-cond. LED term. blocks with red LED, DC 24 V		
Circuit I, grey	**2001-1321/1000-434**	100
Circuit II, grey	**2001-1321/1000-413**	100
Examples of circuit configuration see page see 25		
Through terminal block with the same shape		
grey	**2001-1301**	
End and intermediate plate, 0.8 mm / 0.032 in thick		
orange	**2002-1392**	100 (4 x 25)
grey	**2002-1391**	100 (4 x 25)

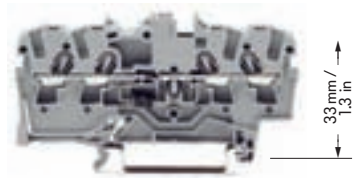



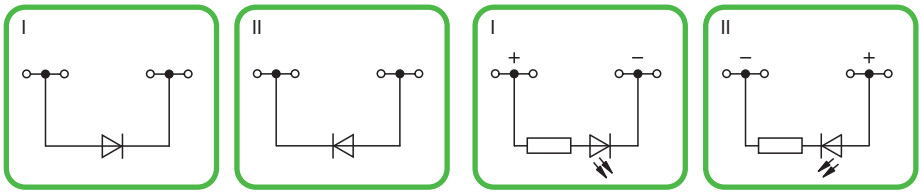

	Item No.	Pack.-unit pcs
4-cond. diode term. blocks with diode 1 N 4007		
Circuit I, grey	**2001-1411/1000-410**	100
Circuit II, grey	**2001-1411/1000-411**	100
Examples of circuit configuration see page see 25		
Through terminal block with the same shape		
grey	**2001-1401**	
End and intermediate plate, 0.8 mm / 0.032 in thick		
orange	**2002-1492**	100 (4 x 25)
grey	**2002-1491**	100 (4 x 25)

	Item No.	Pack.-unit pcs
4-cond. LED term. blocks with red LED, DC 24 V		
Circuit I, grey	**2001-1421/1000-434**	100
Circuit II, grey	**2001-1421/1000-413**	100
Examples of circuit configuration see page see 25		
Through terminal block with the same shape		
grey	**2001-1401**	
End and intermediate plate, 0.8 mm / 0.032 in thick		
orange	**2002-1492**	100 (4 x 25)
grey	**2002-1491**	100 (4 x 25)

TOPJOB®S
Diode Terminal Blocks 2.5 (4) mm² / AWG 12 and LED Terminal Blocks 2.5 (4) mm²; Series 2002

0.25 – 2.5 (4) mm² | **AWG 22 – 12** **U_N 250 V; U_{RM} 1000 V** **1 N 4007 – 0.5 A continuous current** **Terminal block width 5,2 mm / 0.205 in** **10 – 12 mm / 0.43 in**	**0.25 – 2.5 (4) mm²** | **AWG 22 – 12** **U_N 250 V; U_{RM} 1000 V** **1 N 4007 – 0.5 A continuous current** **Terminal block width 5.2 mm / 0.205 in** **10 – 12 mm / 0.43 in**	**0.25 – 2.5 (4) mm²** | **AWG 22 – 12** **DC 24 V** **I_F 0.025 A max.** **Terminal block width 5.2 mm / 0.205 in** **10 – 12 mm / 0.43 in**

❶ can be connected: 0.25 mm² – 4 mm² "s+f-st";
can be pushed in directly: 0.75 mm² – 4 mm² "s" and 0.75 mm² – 2.5 mm² "insulated ferrule, 12 mm/0.472 in"

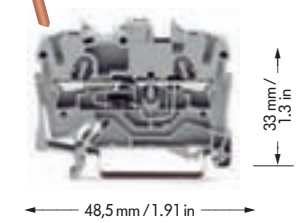

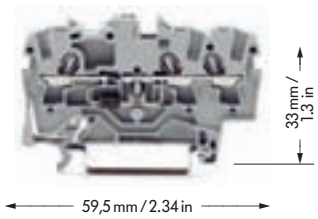

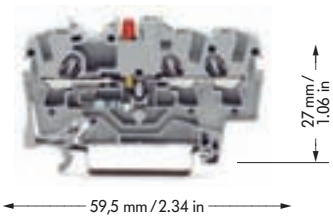

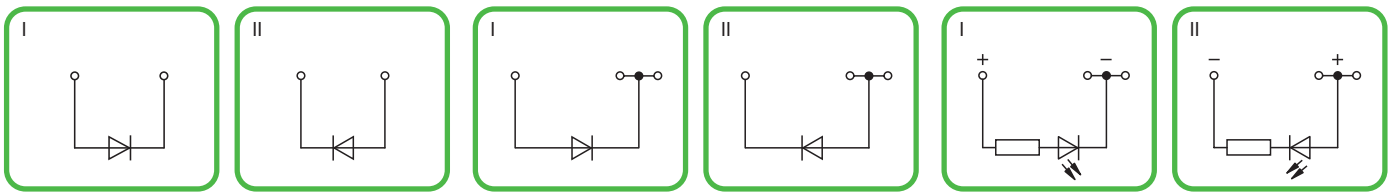

Item No.	Pack.-unit pcs	Item No.	Pack.-unit pcs	Item No.	Pack.-unit pcs
2-cond. diode term. blocks with diode 1 N 4007		**3-cond. diode term. blocks with diode 1 N 4007**		**3-cond. LED term. blocks with red LED, DC 24 V**	
Circuit I, grey **2002-1211/1000-410**	100	Circuit I, grey **2002-1311/1000-410**	100	Circuit I, grey **2002-1321/1000-434**	100
Circuit II, grey **2002-1211/1000-411**	100	Circuit II, grey **2002-1311/1000-411**	100	Circuit II, grey **2002-1321/1000-413**	100
Examples of circuit configuration see page see 25		Examples of circuit configuration see page see 25		Examples of circuit configuration see page see 25	
Through terminal block with the same shape		**Through terminal block with the same shape**		**Through terminal block with the same shape**	
grey **2002-1201**		grey **2002-1301**		grey **2002-1301**	
End and intermediate plate, 0.8 mm / 0.032 in thick		**End and intermediate plate,** 0.8 mm / 0.032 in thick		**End and intermediate plate,** 0.8 mm / 0.032 in thick	
orange **2002-1292**	100 (4 x 25)	orange **2002-1392**	100 (4 x 25)	orange **2002-1392**	100 (4 x 25)
grey **2002-1291**	100 (4 x 25)	grey **2002-1391**	100 (4 x 25)	grey **2002-1391**	100 (4 x 25)

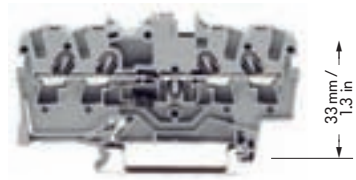



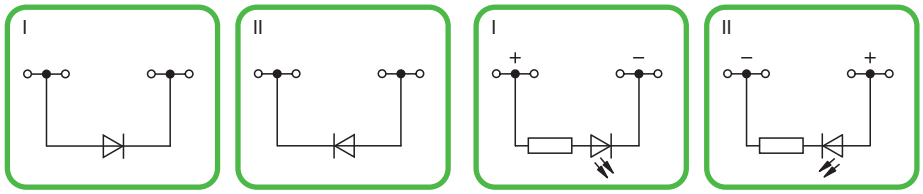

	Item No.	Pack.-unit pcs	Item No.	Pack.-unit pcs
	4-cond. diode term. blocks with diode 1 N 4007		**4-cond. LED term. blocks with red LED, DC 24 V**	
	Circuit I, grey **2002-1411/1000-410**	100	Circuit I, grey **2002-1421/1000-434**	100
	Circuit II, grey **2002-1411/1000-411**	100	Circuit II, grey **2002-1421/1000-413**	100
	Examples of circuit configuration see page see 25		Examples of circuit configuration see page see 25	
	Through terminal block with the same shape		**Through terminal block with the same shape**	
	grey **2002-1401**		grey **2002-1401**	
	End and intermediate plate, 0.8 mm / 0.032 in thick		**End and intermediate plate,** 0.8 mm / 0.032 in thick	
	orange **2002-1492**	100 (4 x 25)	orange **2002-1492**	100 (4 x 25)
	grey **2002-1491**	100 (4 x 25)	grey **2002-1491**	100 (4 x 25)

Accessories and Examples of Circuit Configuration
Diode Terminal Blocks and LED Terminal Blocks; Series 2001/2002

Accessories Series 2001	Accessories Series 2002	
LED terminal blocks cannot be commoned with push-in type jumper bars	**LED terminal blocks cannot be commoned with push-in type jumper bars**	

	Item No.	Pack.-unit pcs		Item No.	Pack.-unit pcs	
Push-in type jumper bars, light grey, insulated, I_N 18 A			**Push-in type jumper bars,** light grey, insulated, I_N 25 A			
	2-way	**2001-402** 200 (8 x 25)		2-way	**2002-402** 200 (8 x 25)	
	3-way	**2001-403** 200 (8 x 25)		3-way	**2002-403** 200 (8 x 25)	
	4-way	**2001-404** 200 (8 x 25)		4-way	**2002-404** 200 (8 x 25)	
	5-fway	**2001-405** 100 (4 x 25)		5-way	**2002-405** 100 (4 x 25)	
	:	:		:	:	
	10-way	**2001-410** 100 (4 x 25)		10-way	**2002-410** 100 (4 x 25)	
Push-in type jumper bars, light grey, insulated, I_N 18 A			**Push-in type jumper bars,** light grey, insulated, I_N 25 A			
	1 - 3	**2001-433** 200 (8 x 25)		1 - 3	**2002-433** 200 (8 x 25)	
	1 - 4	**2001-434** 200 (8 x 25)		1 - 4	**2002-434** 200 (8 x 25)	
	1 - 5	**2001-435** 100 (4 x 25)		1 - 5	**2002-435** 100 (4 x 25)	
	:	:		:	:	
	1 - 10	**2001-440** 100 (4 x 25)		1 - 10	**2002-440** 100 (4 x 25)	

Examples of cuircuit configuration

2-conductor diode terminal block

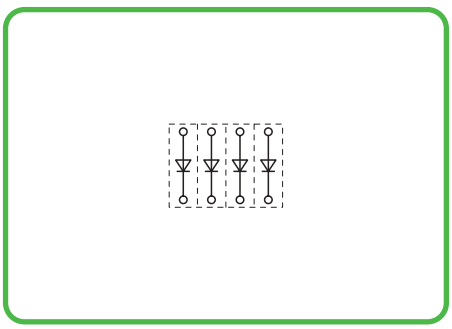

Open diode gate

3-conductor diode terminal block

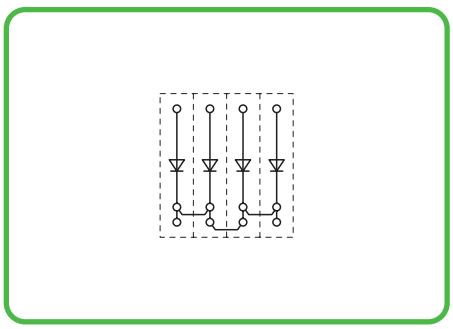

Polarized diode gate, common cathode

4-conductor diode terminal block

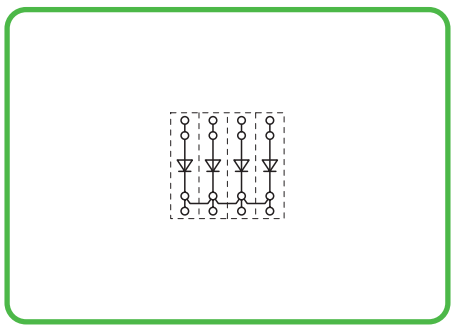

Polarized diode gate, common cathode

3-conductor LED terminal block

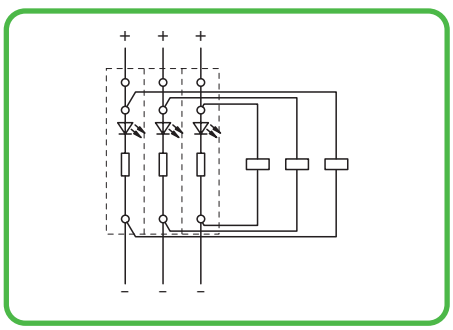

Voltage indication

4-conductor LED terminal block

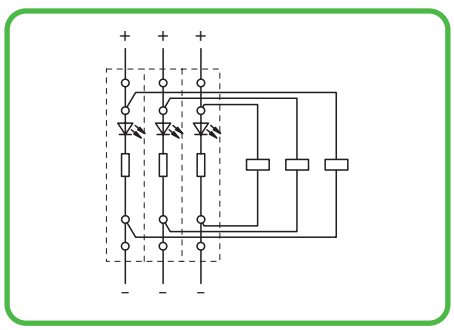

Voltage indication

TOPJOB®S
Double Deck Diode Terminal Blocks / Double Deck LED Terminal Blocks 2.5 mm²/4 mm² / AWG 12, Series 2002

	0.25 – 2.5 (4) mm² ❶ | AWG 22 – 12 **U_N 250 V; U_{RM} 1000 V** **1 N 4007 – 0.5 A continuous current** **Terminal block width 5.2 mm / 0.205 in** **10 – 12 mm / 0.43 in**	**0.25 – 2.5 (4) mm² ❶ | AWG 22 – 12** **U_N 250 V; U_{RM} 1000 V** **1 N 4007 – 0.5 A continuous current** **Terminal block width 5.2 mm / 0.205 in** **10 – 12 mm / 0.43 in**

❶ can be connected: 0.25 mm² – 4 mm² "s + f-st";
can be pushed in directly: 0.75 mm² – 4 mm² "s" and
0.75 mm² – 2.5 mm² "insulated ferrule, 12 mm/0.472 in"

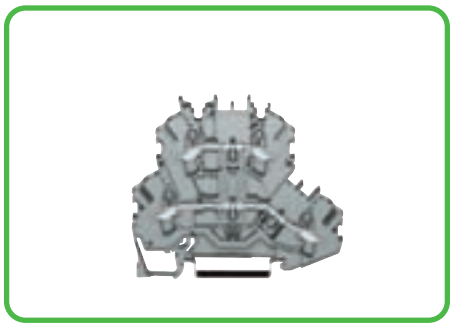

Through terminal blocks with the same shape
see page 8

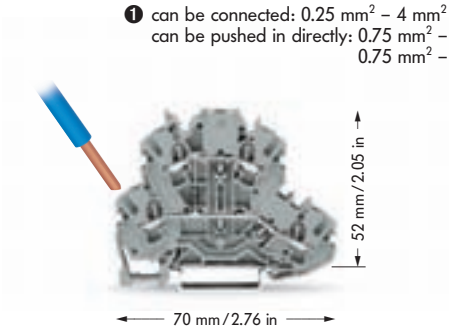

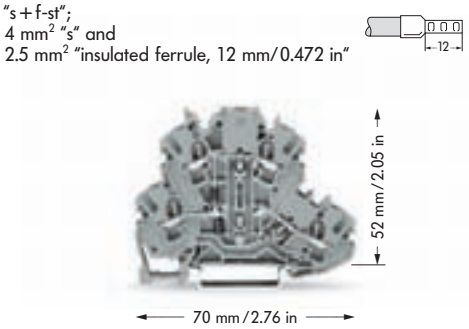

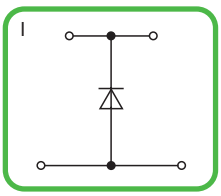

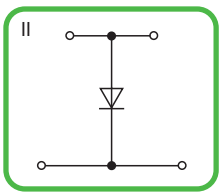

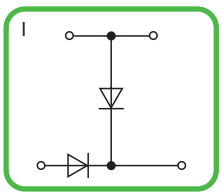

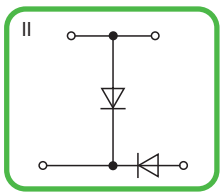

Description		Item No.	Pack. unit pcs		Item No.	Pack. unit pcs
Double deck diode terminal block		**Double deck diode terminal blocks**			**Double deck diode terminal blocks**	
and		**with diode 1 N 4007**			**with 2 diodes 1 N 4007**	
double deck LED terminal block, for DIN 35 rail	Circuit I, grey	**2002-2211/1000-410**	50	Circuit I, grey	**2002-2214/1000-492**	50
	Circuit II, grey	**2002-2211/1000-411**	50	Circuit II, grey	**2002-2214/1000-491**	50

Accessories

Appropriate marking system **WMB/WMB Inline** (see also Full Line Catalog W4 Volume 1, Section 14)

	**End and intermediate plate**	0.8 mm / 0.032 in thick			0.8 mm / 0.032 in thick		
		orange	**2002-2292**	100 (4 x 25)	orange	**2002-2292**	100 (4 x 25)
		grey	**2002-2291**	100 (4 x 25)	grey	**2002-2291**	100 (4 x 25)
	**Push-in type jumper bars,**	2-way	**2002-402**	200 (8 x 25)	2-way	**2002-402**	200 (8 x 25)
	light grey, insulated,	3-way	**2002-403**	200 (8 x 25)	3-way	**2002-403**	200 (8 x 25)
	I_N 25 A	4-way	**2002-404**	200 (8 x 25)	4-way	**2002-404**	200 (8 x 25)
		5-way	**2002-405**	100 (4 x 25)	5-way	**2002-405**	100 (4 x 25)
		:	:		:	:	
		10-way	**2002-410**	100 (4 x 25)	10-way	**2002-410**	100 (4 x 25)
	**Push-in type jumper bars,**						
	light grey, insulated,	1 - 3	**2002-433**	200 (8 x 25)	1 - 3	**2002-433**	200 (8 x 25)
	I_N 25 A	1 - 4	**2002-434**	200 (8 x 25)	1 - 4	**2002-434**	200 (8 x 25)
		1 - 5	**2002-435**	100 (4 x 25)	1 - 5	**2002-435**	100 (4 x 25)
		:	:		:	:	
		1 - 10	**2002-440**	100 (4 x 25)	1 - 10	**2002-440**	100 (4 x 25)
	**Two-way marking adapter,**						
	pivotable		**2002-121**	50 (2 x 25)		**2002-121**	50 (2 x 25)

Examples of circuit configuration

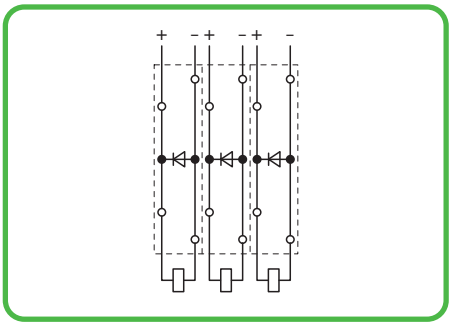

Used as recovery diodes

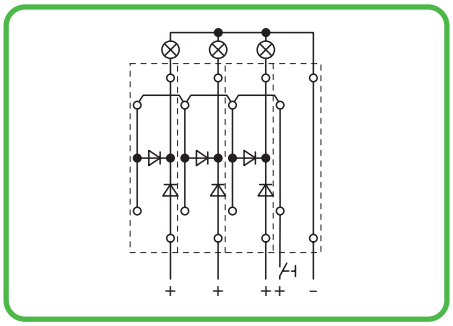

Used in lamp test circuit

0.25 – 2.5 (4) mm² ❶ | AWG 22 – 12 U_N 250 V; U_{RM} 1000 V 1 N 4007 – 0.5 A continuous current Terminal block width 5.2 mm / 0.205 in 10 – 12 mm / 0.43 in	0.25 – 2.5 (4) mm² ❶ | AWG 22 – 12 U_N 250 V; U_{RM} 1000 V 1 N 4007 – 0.5 A continuous current Terminal block width 5.2 mm / 0.205 in 10 – 12 mm / 0.43 in	0.25 – 2.5 (4) mm² ❶ | AWG 22 – 12 DC 24 V I_F 25 mA max. Terminal block width 5.2 mm / 0.205 in 10 – 12 mm / 0.43 in

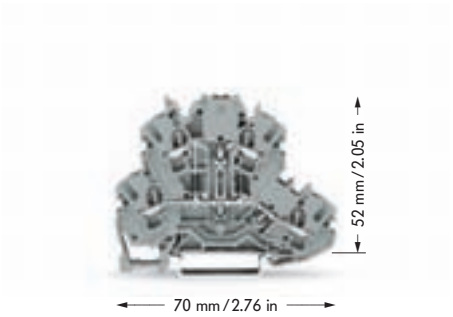

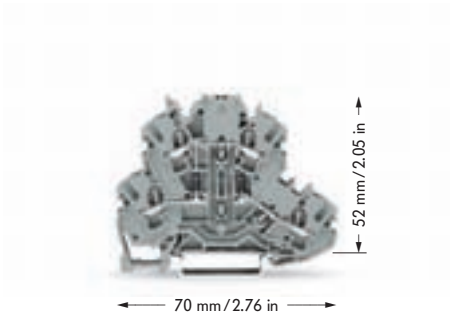

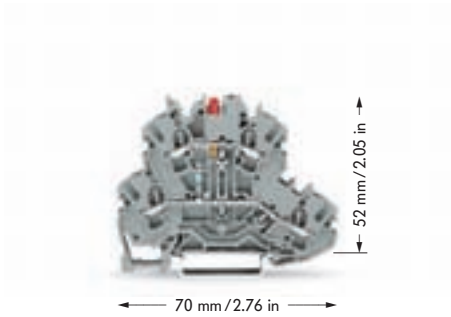

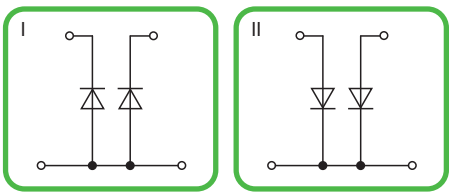

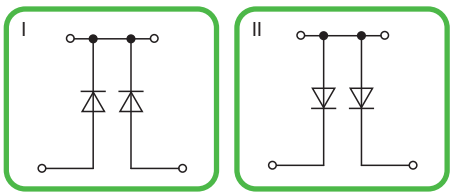

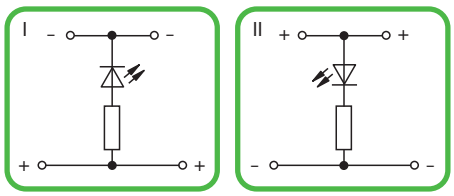

	Item No.	Pack. unit pcs		Item No.	Pack. unit pcs		Item No.	Pack. unit pcs
Double deck diode terminal blocks			**Double deck diode terminal blocks**			**Double deck LED terminal blocks**		
with 2 diodes 1 N 4007			**with 2 diodes 1 N 4007**			**with red LED,** DC 24 V		
Circuit I, grey	**2002-2213/1000-487**	50	Circuit I, grey	**2002-2214/1000-489**	50	Circuit I, grey	**2002-2221/1000-434**	50
Circuit II, grey	**2002-2213/1000-488**	50	Circuit II, grey	**2002-2214/1000-490**	50	Circuit II, grey	**2002-2221/1000-413**	50
Appropriate marking system **WMB/WMB Inline** (see also Full Line Catalog W4 Volume 1 Section 14)								
0.8 mm / 0.032 in thick			0.8 mm / 0.032 in thick			0.8 mm / 0.032 in thick		
orange	**2002-2292**	100 (4 x 25)	orange	**2002-2292**	100 (4 x 25)	orange	**2002-2292**	100 (4 x 25)
grey	**2002-2291**	100 (4 x 25)	grey	**2002-2291**	100 (4 x 25)	grey	**2002-2291**	100 (4 x 25)
2-way	**2002-402**	200 (8 x 25)	2-way	**2002-402**	200 (8 x 25)	2-way	**2002-402**	200 (8 x 25)
3-way	**2002-403**	200 (8 x 25)	3-way	**2002-403**	200 (8 x 25)	3-way	**2002-403**	200 (8 x 25)
4-way	**2002-404**	200 (8 x 25)	4-way	**2002-404**	200 (8 x 25)	4-way	**2002-404**	200 (8 x 25)
5-way	**2002-405**	100 (4 x 25)	5-way	**2002-405**	100 (4 x 25)	5-way	**2002-405**	100 (4 x 25)
:	:		:	:		:	:	
10-way	**2002-410**	100 (4 x 25)	10-way	**2002-410**	100 (4 x 25)	10-way	**2002-410**	100 (4 x 25)
1 - 3	**2002-433**	200 (8 x 25)	1 - 3	**2002-433**	200 (8 x 25)	1 - 3	**2002-433**	200 (8 x 25)
1 - 4	**2002-434**	200 (8 x 25)	1 - 4	**2002-434**	200 (8 x 25)	1 - 4	**2002-434**	200 (8 x 25)
1 - 5	**2002-435**	100 (4 x 25)	1 - 5	**2002-435**	100 (4 x 25)	1 - 5	**2002-435**	100 (4 x 25)
:	:		:	:		:	:	
1 - 10	**2002-440**	100 (4 x 25)	1 - 10	**2002-440**	100 (4 x 25)	1 - 10	**2002-440**	100 (4 x 25)
	2002-121	50 (2 x 25)		**2002-121**	50 (2 x 25)		**2002-121**	50 (2 x 25)

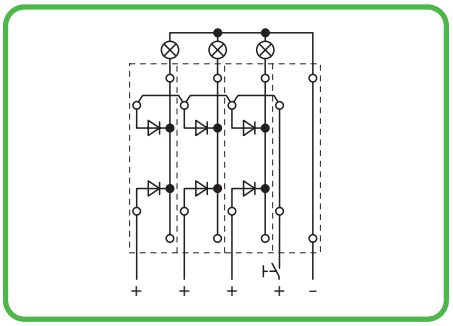

Used in lamp test circuit

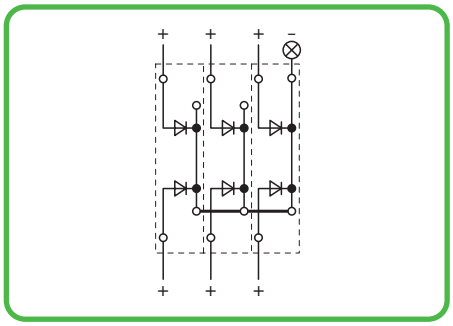

Used for collective fault indication

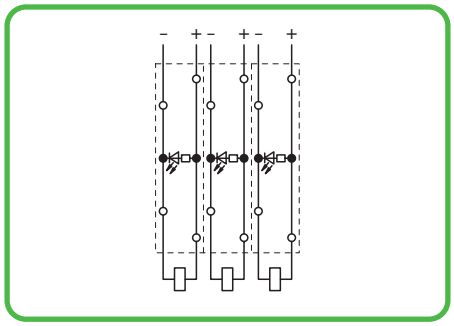

Used for voltage indication

TOPJOB®S
Triple Deck Diode Terminal Blocks / Triple Deck LED Terminal Blocks 2.5 mm²/4 mm² / AWG 12, Series 2002

	0.25 – 2.5 (4) mm² ❶ | AWG 22 – 12 U_N 250 V; U_{RM} 1000 V 1 N 4007 – 0.5 A continuous current Terminal block width 5.2 mm / 0.205 in 10 – 12 mm / 0.43 in	0.25 – 2.5 (4) mm² ❶ | AWG 22 – 12 U_N 250 V; U_{RM} 1000 V 1 N 4007 – 0.5 A continuous current Terminal block width 5.2 mm / 0.205 in 10 – 12 mm / 0.43 in

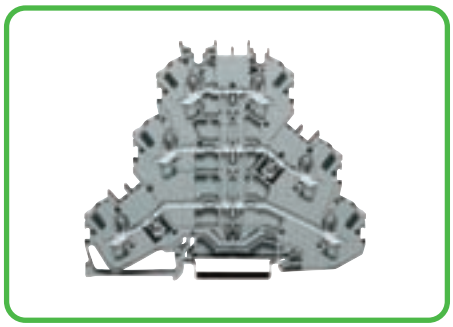

Through terminal blocks with the same shape
see page 10

❶ can be connected: 0.25 mm² – 4 mm² "s + f-st";
can be pushed in directly: 0.75 mm² – 4 mm² "s" and 0.75 mm² – 2.5 mm² "insulated ferrule, 12 mm/0.472 in"

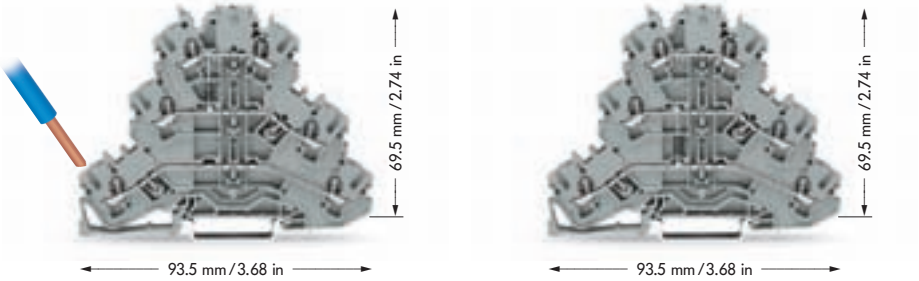

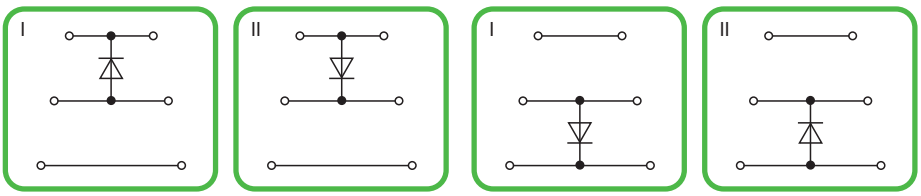

Description		Item No.	Pack. unit pcs		Item No.	Pack. unit pcs
Triple deck diode terminal block	**Triple deck diode terminal blocks**			**Triple deck diode terminal blocks**		
and	**with diode 1 N 4007**			**with diode 1 N 4007**		
Triple deck LED terminal block, for DIN 35 rail	Circuit I, grey	**2002-3211/1000-410**	50	Circuit I, grey	**2002-3211/1000-675**	50
	Circuit II, grey	**2002-3211/1000-411**	50	Circuit II, grey	**2002-3211/1000-676**	50

Accessories

Appropriate marking system **WMB/WMB Inline** (see also Full Line Catalog W4 Volume 1, Section 14)

	**End and intermediate plate**	0.8 mm / 0.032 in thick			0.8 mm / 0.032 in thick		
		orange	**2002-3292**	100 (4 x 25)	orange	**2002-3292**	100 (4 x 25)
		grey	**2002-3291**	100 (4 x 25)	grey	**2002-3291**	100 (4 x 25)
	**Push-in type jumper bars,**	2-way	**2002-402**	200 (8 x 25)	2-way	**2002-402**	200 (8 x 25)
	light grey, insulated,	3-way	**2002-403**	200 (8 x 25)	3-way	**2002-403**	200 (8 x 25)
	I_N 25 A	4-way	**2002-404**	200 (8 x 25)	4-way	**2002-404**	200 (8 x 25)
		5-way	**2002-405**	100 (4 x 25)	5-way	**2002-405**	100 (4 x 25)
		:	:		:	:	
		10-way	**2002-410**	100 (4 x 25)	10-way	**2002-410**	100 (4 x 25)
	**Push-in type jumper bars,**						
	light grey, insulated,	1 - 3	**2002-433**	200 (8 x 25)	1 - 3	**2002-433**	200 (8 x 25)
	I_N 25 A	1 - 4	**2002-434**	200 (8 x 25)	1 - 4	**2002-434**	200 (8 x 25)
		1 - 5	**2002-435**	100 (4 x 25)	1 - 5	**2002-435**	100 (4 x 25)
		:	:		:	:	
		1 - 10	**2002-440**	100 (4 x 25)	1 - 10	**2002-440**	100 (4 x 25)
	**Two-way marking adapter,**						
	pivotable		**2002-131**	50 (2 x 25)		**2002-131**	50 (2 x 25)

0.25 – 2.5 (4) mm² ❶ | AWG 22 – 12 **U_N 250 V; U_{RM} 1000 V** **1 N 4007 – 0.5 A continuous current** **Terminal block width 5.2 mm / 0.205 in** **10 – 12 mm / 0.43 in**	**0.25 – 2.5 (4) mm² ❶ | AWG 22 – 12** **DC 24 V** **I_F 25 mA max.** **Terminal block width 5.2 mm / 0.205 in** **10 – 12 mm / 0.43 in**	

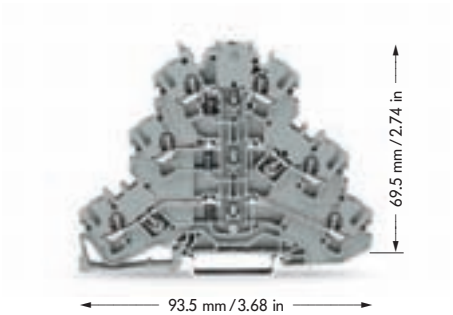

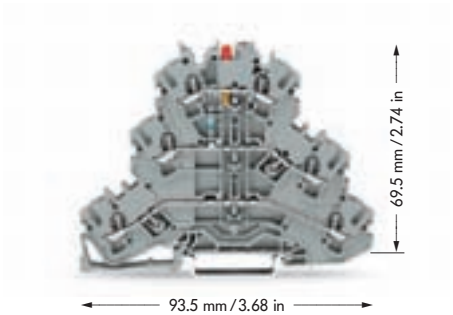

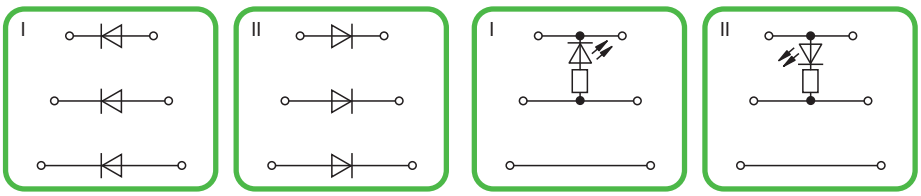

	Item No.	Pack. unit pcs		Item No.	Pack. unit pcs	
Triple deck diode terminal blocks			**Triple deck LED terminal blocks**			
with 3 diodes 1 N 4007			**with red LED,** DC 24 V			
Circuit I, grey	**2002-3212/1000-673**	50	Circuit I, grey	**2002-3221/1000-434**	50	
Circuit II, grey	**2002-3212/1000-674**	50	Circuit II, grey	**2002-3221/1000-413**	50	
Appropriate marking system **WMB/WMB Inline** (see also Full Line Catalog W4 Volume 1 Section 14)						
0.8 mm / 0.032 in thick			0.8 mm / 0.032 in thick			
orange	**2002-3292**	100 (4 x 25)	orange	**2002-3292**	100 (4 x 25)	
grey	**2002-3291**	100 (4 x 25)	grey	**2002-3291**	100 (4 x 25)	
2-way	**2002-402**	200 (8 x 25)	2-way	**2002-402**	200 (8 x 25)	
3-way	**2002-403**	200 (8 x 25)	3-way	**2002-403**	200 (8 x 25)	
4-way	**2002-404**	200 (8 x 25)	4-way	**2002-404**	200 (8 x 25)	
5-way	**2002-405**	100 (4 x 25)	5-way	**2002-405**	100 (4 x 25)	
:	:		:	:		
10-way	**2002-410**	100 (4 x 25)	10-way	**2002-410**	100 (4 x 25)	
1 - 3	**2002-433**	200 (8 x 25)	1 - 3	**2002-433**	200 (8 x 25)	
1 - 4	**2002-434**	200 (8 x 25)	1 - 4	**2002-434**	200 (8 x 25)	
1 - 5	**2002-435**	100 (4 x 25)	1 - 5	**2002-435**	100 (4 x 25)	
:	:		:	:		
1 - 10	**2002-440**	100 (4 x 25)	1 - 10	**2002-440**	100 (4 x 25)	
	2002-131	50 (2 x 25)		**2002-131**	50 (2 x 25)	

Push-in Type Wire Jumpers and Star Point Jumpers

Wire jumpers		Star point jumpers	
Nominal voltage:	800 V/8 kV/3	Nominal voltage:	800 V/8 kV/3
Nominal current:	16 A	Nominal current:	$I_N \triangleq I_N$ Terminal block of the relevant series
Nominal cross section:	1.5 mm²/AWG 16		
Conductor lengths:	60/110/250 mm 2.36/4.33/9.84 in		





	Item No.	Pack.-unit pcs
Push-in type wire jumpers,		
insulated, conductor cross section 1.5 mm²/AWG 16,		
suitable for rail-mounted terminal blocks		
series 2001 and 2002		
Wire length		
60 mm / 2.36 in	**2009-412**	10
110 mm / 4.33 in	**2009-414**	10
250 mm / 9.84 in	**2009-416**	10

	Item No.	Pack.-unit pcs
Star Point Jumpers,		
light grey, insulated		
suitable for series		
2002	**2002-405/011-000**	
2004	**2004-405/011-000**	
2006	**2006-405/011-000**	
2010	**2010-405/011-000**	
2016	**2016-405/011-000**	

Applications notes



Push down the wire jumper until fully inserted.
Lift the jumper with a screwdriver for rewiring.

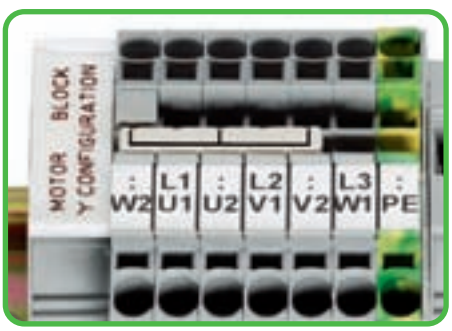

This jumper has been specially developed to create a "star point" and is used on motor terminal boards equipped with TOPJOB® S rail-mounted terminal blocks.

Finger Guard Cover

Finger guard cover
for TOPJOB®S rail-mounted terminal blocks



	Item No.	Pack.-unit pcs
Finger guard cover,		
serves as touchproof protection		
for unused clamping units		
for TOPJOB®S rail-mounted terminal blocks series		
2010	**2010-100**	100 (4 x 25)
2016	**2016-100**	100 (4 x 25)



Insert finger guard cover into unused clamping unit

Pivotable Group marker carrier

WAGO pivotable group marker carrier
– for TOPJOB®S rail-mounted terminal blocks
– for rail-mounted terminal blocks from 5 mm / 0.197 in on and in spacer housings

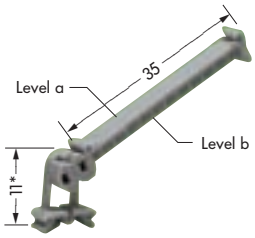

*from upper edge of terminal block

	Item No.	Pack.-unit pcs
Pivotable group marker carrier		
	249-105	50
Marker card, 4 x 30 pcs per sheet		
	209-183	1 sheet
Protection cover, transparent		
	209-184	50

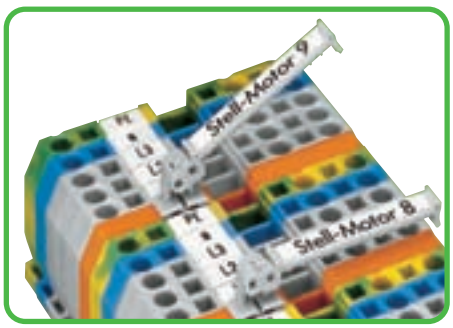

This pivotable group marker carrier has been developed for group marking of rail-mounted terminal blocks and brings together many requirements of our customers.

- Can be used in all multiprofile marker receptacles for rail-mounted terminal bocks from 5 mm width on or in spacer housings as shown in the picture
- Pivotable in 7 different stable positions, providing the best visual angle in case of difficult mounting conditions
- Two levels for different marking systems

  Level a:
  for marker card (4 x 34) mm (see picture)

  Level b:
  for 12 WCB-Combi markers
  (see left column)

Group Marker Carriers Series 2009

TOPJOB®S **group marker carriers,**

Module width 5 mm / 0.197 in
Module width 10 mm / 0.394 in
Module width 15 mm / 0.591 in

for marker cards and self-adhesive marker cards



	Item No.	Pack.-unit pcs
TOPJOB®S **group marker carriers,**		
snap-on type for jumper slot		
5 mm/0.197 in wide	**2009-191**	50
10 mm/0.394 in wide	**2009-192**	50
15 mm/0.591 in wide	**2009-193**	50
WAGO Multi marking system WMB,		
miniature WSB Quick marking system,		
marker strips, 11 mm / 0.433 in wide		
for marker cards and self-adhesive marker cards		
	2009-196	50

(see also Full Line Catalog W4 Volume 1, Section 14)

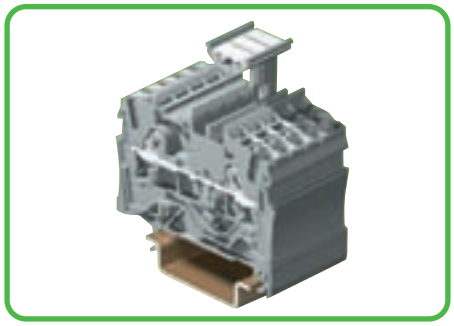

TOPJOB®S group marker carrier (equipped with WMB Multi marking system). Suitable for all TOPJOB®S rail-mounted terminal blocks from Series 2001 to 2016

WAGO Marking System WMB Inline Series 2009

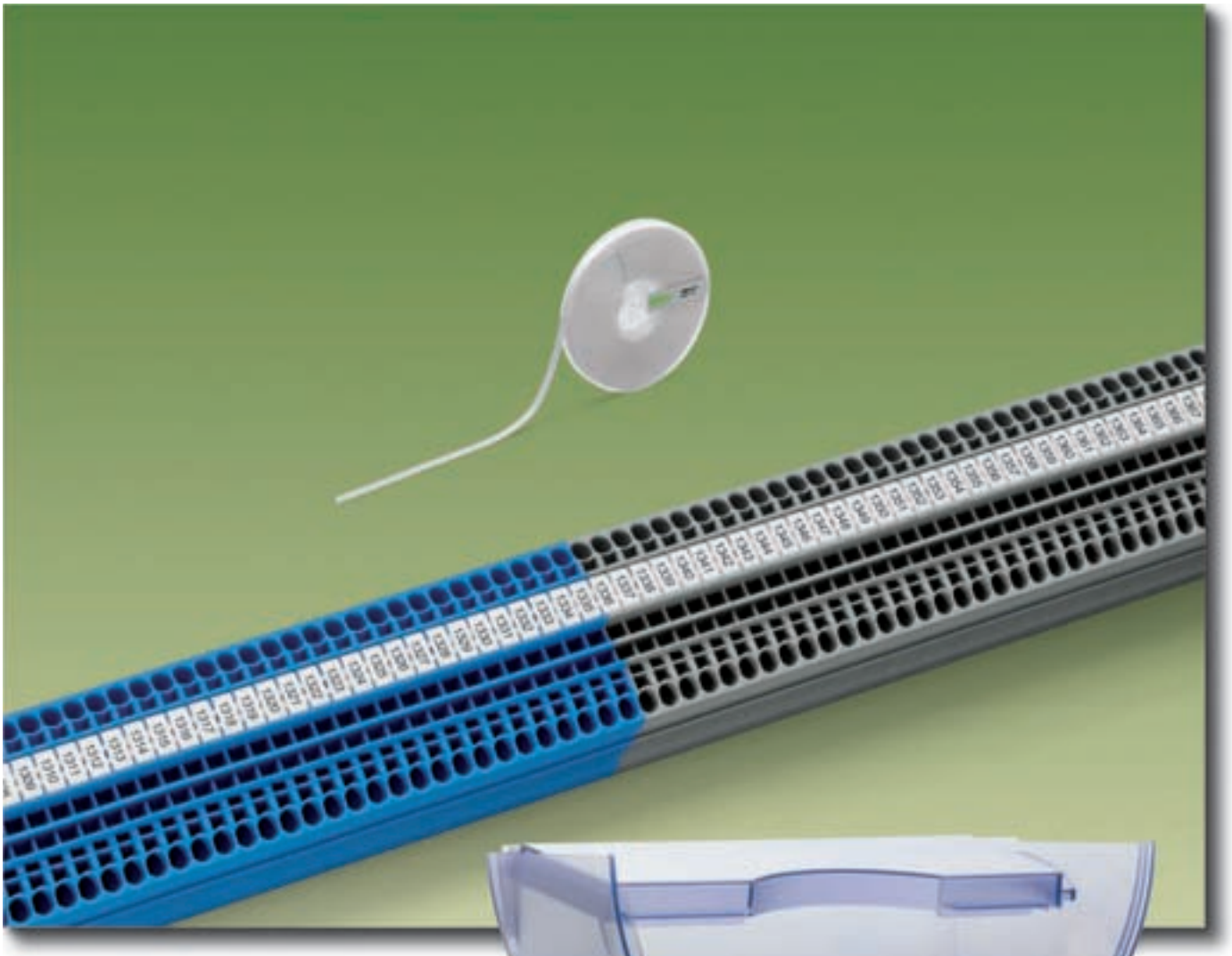

Marking

WMB or miniature WSB markers can be used in three positions of the TOPJOB® S products. Moreover, a full length marking strip can be used in the top position of a terminal block. The terminal blocks from 1.5 mm²/AWG 16 to 6 mm²/AWG 10 as well as 10 mm²/AWG 8 and 16 mm²/AWG 6 are at the same height which allows quick marking even of terminal blocks of different sizes. The WAGO "smart Designer" software and a thermal transfer printer generate the marking.

WMB – Inline

- Markers "from the roll" save time and money
- A thermal transfer printer and the WAGO "smart Designer" software generate the marking
- Markers fit 5 mm / 0.197 in and 5.2 mm / 0.205 in wide terminal blocks and can hence be used for all 2.5 mm² WAGO rail-mounted terminal blocks
- Can be separated easily
- When separated they can also be fitted on all wider WAGO rail-mounted terminal blocks



WMB Inline, pitch 5 mm / 0.197 in, for 5 mm / 0.197 in and 5.2 mm / 0.205 in, on roll, 10 m

white	**2009-115**	1 roll

1500 markers / roll

Connecting conductors up to 95 mm²/AWG 4/0 with a turn of the hand

The 285 Series of rail-mounted terminal blocks are suitable for applications with rated currents up to 232 A. Based on a unique patented technology, the largest version,

285-195, rated for **25-95 mm²/AWG 4 to AWG 4/0** has been holding its ground in the market for many years.

Now, two additional terminal blocks for wire sizes down to 6 mm² (AWG 8) have been added to the range:

285–135, 6–35 mm²/AWG 8 to AWG 2

285–150, 10–50 mm²/AWG 8 to 2/0 (70 mm² "f-st").

Operation of these new terminals is essentially the same as the 95 mm² terminal block. **The 35 mm² terminal block has the following differences.**



In addition to the WMB marking system, custom marking strips can also be used.



Commoning adjacent terminal blocks using centrally positioned adjacent jumper.



Move the marking strip laterally to remove the jumper.

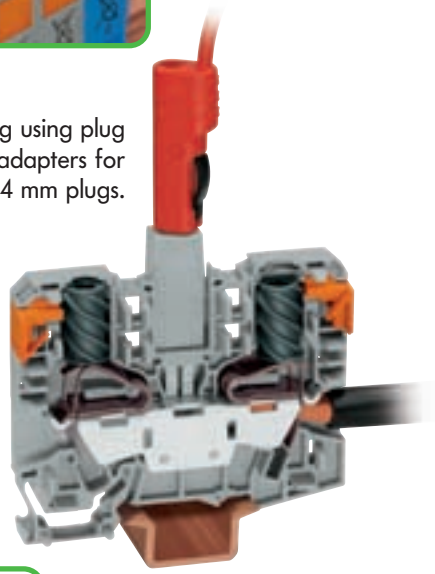

Testing using plug adapters for Ø 4 mm plugs.

Counter-clockwise rotation using a screwdriver 5.5 mm/ 0.217 in. Hold clamp in open position using the latch.





Introduce stripped wire into the clamping unit up to the stop and hold it in position . . .



. . . A small counter-clockwise rotation releases the latch ❶. Once the screwdriver ❷ has been removed the conductor is safely clamped.

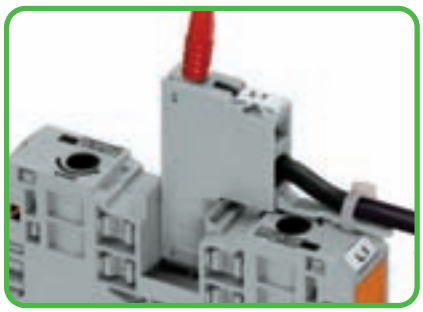

The voltage tap is inserted into the jumper contact slot. It can be fitted with a strain relief plate and provides test option for Ø 2 mm test sockets.



Side entry wiring means that even larger cables, which are flexible to a limited degree, can be connected without a problem.

High Current Through/Ground (Earth) Conductor Terminal Blocks 35 mm²/AWG 2, Series 285, Side-entry

6 – 35 mm²	AWG 8 – 2
1000 V/8 kV/3 ❶	600 V, 115 A
I_N 125 A	600 V
Terminal block width 16 mm / 0.63 in	
25 – 26 mm / 0.98 in	

6 – 35 mm²	AWG 8 – 2
Terminal block width 16 mm / 0.63 in	
25 – 26 mm / 0.98 in	

0.2 – 6 mm²	AWG 24 – 10
800 V/8 kV/3	
I_N 32 A	
Terminal block width 8 mm / 0.315 in	
12 – 13 mm / 0.49 in	

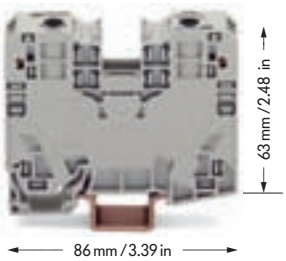

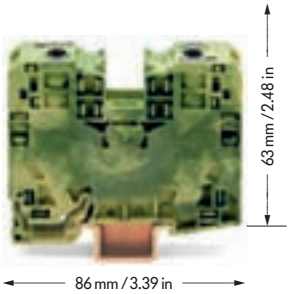



	Item No.	Pack. unit pcs
2-conductor through terminal blocks		
grey	**285-135**	15
blue	**285-134**	15
To be used **exclusively** on DIN 35 x 15; 2.3 mm / 0.091 in thick		

	Item No.	Pack. unit pcs
2-conductor ground (earth) terminal blocks		
green-yellow	**285-137**	15
To be used **exclusively** on DIN 35 x 15; 2.3 mm / 0.091 in thick, Cu		

	Item No.	Pack. unit pcs
Voltage tap,		
grey	**285-427**	5

Accessories

Appropriate marking system **WMB/Marker strips** (see W4 Volume 1, Section 14)

Appropriate marking system **WMB**

Adjacent jumper, insulated,



I_N 100 A for 1 jumper
I_N 85 A for 2 to 4 jumpers
grey **285-435** 50 (2 x 25)

Adjacent jumper, insulated,



I_N 100 A for 1 jumper
I_N A for 2 to 4 jumpers
grey **285-435** 50 (2 x 25)

Strain relief plate, snap-on type for voltage tap



grey **769-410** 100 (4 x 25)

Screwdriver with partially insulated shaft,



type 3, blade 5.5 x 0.8 mm / 0.217 in x 0.031 in
210-621 1

crewdriver with partially insulated shaft,



type 3, blade 5.5 x 0.8 mm / 0.217 in x 0.031 in
210-621 1

Test plug, with cable 500 mm / 17.7"



2 mm Ø, red **210-136** 50 (5 x 10)

Protective warning marker,



with high voltage symbol, black
yellow **285-420** 50 (2 x 25)

Protective warning marker,



with high voltage symbol, black
yellow **285-420** 50 (2 x 25)

Finger guard cover, serves as touchproof protection for unused clamping units



yellow **285-421** 25

Finger guard cover, serves as touchproof protection for unused clamping units



yellow **285-421** 25

Test plug adapter, 11.6 mm / 4.57 in wide, for test plug 4 mm / 0.157 in Ø



283-404 25

Test plug adapter, 11.6 mm / 4.57 in wide, for test plug 4 mm / 0.157 in Ø



283-404 25

Test plug, Ø 4 mm / 0.157 in, protected against accidental contact, not offered by WAGO



e. g. Fa. Multi-Contact Deutschland GmbH
Postfach 16 06 · 79551 Weil am Rhein
Hegenheimerstraße 19 · 79576 Weil am Rhein

Test plug, Ø 4 mm / 0.157 in, protected against accidental contact, not offered by WAGO



e. g. Fa. Multi-Contact Deutschland GmbH
Postfach 16 06 · 79551 Weil am Rhein
Hegenheimerstraße 19 · 79576 Weil am Rhein

❶ 1000 V = rated voltage
8 kV = rated surge voltage
3 = pollution degree
(see also Full Line Catalog W4 Volume 1, Section 15)

High Current Through/Ground (Earth) Conductor Terminal Blocks 50 (70 "f-st") mm²/AWG 2/0; Series 285, Side-entry

POWER CAGE CLAMP®

10 – 50 (70 "f-st") mm² / AWG 8 – 2/0 1000 V/8 kV/3 ❶ I_N 150 A / 600 V Terminal block width 20 mm / 0.78 in 30 mm / 1.18 in	10 – 50 (70 "f-st") mm² / AWG 8 – 2/0 Terminal block width 20 mm / 0.78 in 30 mm / 1.18 in	2 x 0,2 – 6 mm² / AWG 24 – 10 1000 V/8 kV/3 I_N 41 A Module width 16 mm / 0.63 in 12 – 13 mm / 0.49 in

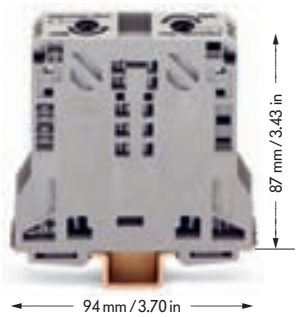

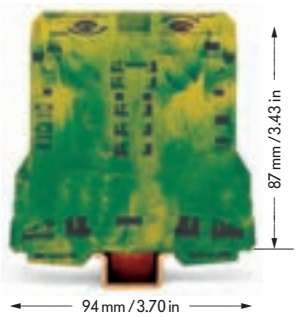



	Item No.	Pack. unit pcs
2-conductor through terminal blocks		
grey	**285-150**	5
blue	**285-154**	5
To be used **exclusively** on DIN 35 x 15; 2.3 mm / 0.091 in thick		

	Item No.	Pack. unit pcs
2-conductor ground (earth) terminal blocks		
green-yellow	**285-157**	5
To be used **exclusively** on DIN 35 x 15; 2.3 mm / 0.091 in thick, Cu		

	Item No.	Pack. unit pcs
Voltage tap,		
grey	**285-447**	5

Accessories

Appropriate marking system **WMB** (see Full Line Catalog W4 Volume 1, Section 14)

Adjacent jumper, insulated, I_N 150 A		
grey	**285-450**	25
Hex wrench with partially insulated shaft		
	285-172	1
Protective warning marker, with high voltage symbol, black		
yellow	**285-420**	50 (2 x 25)
Finger guard cover, serves as touchproof protection for unused clamping units		
yellow	**285-421**	25
Test plug, Ø 4 mm / 0.157 in, protected against accidental contact, not offered by WAGO		
e. g. Fa. Multi-Contact Deutschland GmbH Postfach 16 06 · 79551 Weil am Rhein Hegenheimerstraße 19 · 79576 Weil am Rhein		

Adjacent jumper, insulated, I_N 150 A		
grey	**285-450**	25
Hex wrench with partially insulated shaft		
	285-172	1
Protective warning marker, with high voltage symbol, black		
yellow	**285-420**	50 (2 x 25)
Finger guard cover, serves as touchproof protection for unused clamping units		
yellow	**285-421**	25
Test plug, Ø 4 mm / 0.157 in, protected against accidental contact, not offered by WAGO		
e. g. Fa. Multi-Contact Deutschland GmbH Postfach 16 06 · 79551 Weil am Rhein Hegenheimerstraße 19 · 79576 Weil am Rhein		

Appropriate marking system **WMB**

❶ 1000 V = rated voltage
8 kV = rated surge voltage
3 = pollution degree
(see also Full Line Catalog W4 Volume 1, Section 15)

Collective Carrier for Standard and Special Jumpers, Series 282

Collective carrier for standard and special jumpers in longitudinal disconnect and transverse switch terminal blocks, Series 282, can be snapped onto DIN 35 rail
Width 15.8 mm / 0.62 in
(≙ 2 x pitch 8 mm)

Storage

Safe storage for jumpers that are only needed temporarily in longitudinal disconnect and transverse switch terminal blocks.

Jumpers are used as a "switch" for the transformer short circuit, for example with the longitudinal disconnect terminal blocks. Pre-locking positions in the terminal blocks hold the jumpers captive during normal operation. For users who prefer to store the jumpers outside the terminal block, the collective carrier is an ideal solution.

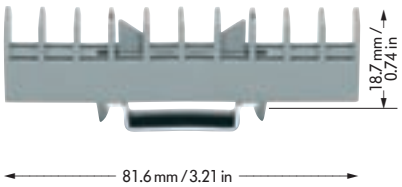

	Item No.	Pack. unit pcs
Collective carrier for jumpers		
	282-369	25
Suitable for jumpers for		
transverse switch t. bl.	282-811 and	
longitudinal disc. t. bl.	282-821	

Appropriate for the following jumpers:

Jumpers, orange, I_N 30 A



2-way	**282-432**	50 (5 x 10)
3-way	**282-433**	50 (5 x 10)
4-way	**282-434**	50 (5 x 10)
5-way	**282-435**	50 (5 x 10)
6-way	**282-436**	50 (5 x 10)
7-way	**282-437**	50 (5 x 10)
8-way	**282-438**	50 (5 x 10)
9-way	**282-439**	50 (5 x 10)
10-way	**282-440**	50 (5 x 10)

Jumpers, special version, orange, I_N 30 A

3-way (1-3-5)	**282-435/011-000**	50 (5 x 10)
4-way (1-3-5-7)	**282-437/011-000**	50 (5 x 10)

The collective carrier can be snapped onto DIN 35 rails. It serves as a depository for jumpers, e.g. during maintenance work.

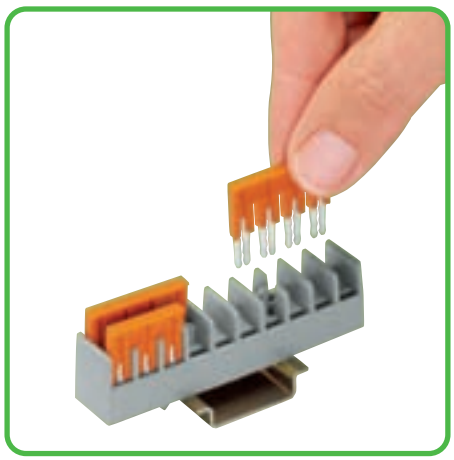

Insertion of a jumper

Transformer test circuits and complex wiring tasks...

...are no problem and only require minimum space.

Customised jumpers are available on request

Application areas:
– Power supply
– Transformer test circuits

X-COM® SYSTEM
2-Conductor/1-Pin Receptacle Terminal Blocks

	0.08 – 4 mm² / 500 V/6 kV/3 ❶ / I_N 32 A* | AWG 28 – 12 / 300 V, 20 A / 300 V, 20 A	0.08 – 4 mm² | AWG 28 – 12
	Terminal block width 5 mm / 0.197 in 8 – 9 mm / 0.33 in *	Terminal block width 5 mm / 0.197 in 8 – 9 mm / 0.33 in *

❶ 500 V = rated voltage
6 kV = rated surge voltage
3 = pollution degree
(see also Full Line Catalog W4 Volume 1, Section 15)
❷ See application notes in our Full Line Catalog W4 Volume 1, pages 2.43 – 2.45

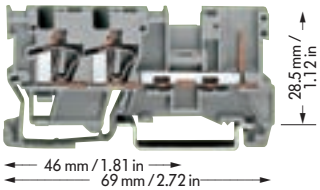

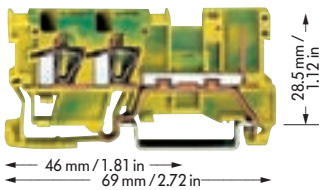

Description		Item No.	Pack. unit pcs		Item No.	Pack. unit pcs
2-conductor/1-pin receptacle terminal block,		**2-conductor/1-pin receptacle terminal block**			**2-conductor/1-pin ground (earth) receptacle**	
suitable for DIN 35 rail acc. to EN 50 022		grey	**769-251**	50	**terminal block**	
					green-yellow	**769-257**	50
Accessories		appropriate marking system **Mini-WSB** (see also Full Line Catalog W4 Volume 1, Section 14)				
	**End and intermediate plate**	1.1 mm / 0.043 in thick			1.1 mm / 0.043 in thick	
		grey	**769-320**	100 (4 x 25)	grey	**769-320**	100 (4 x 25)
		orange	**769-321**	100 (4 x 25)	orange	**769-321**	100 (4 x 25)
	**Screwless end stop**						
		6 mm / 0.236 in wide	**249-116**	100 (4 x 25)	6 mm / 0.236 in wide	**249-116**	100 (4 x 25)
		10 mm / 0.394 in wide	**249-117**	50 (2 x 25)	10 mm / 0.394 in wide	**249-117**	50 (2 x 25)
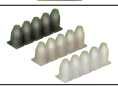	**Insulation stop ❷,** white	0.08 – 0.2 mm²	**769-470**	200 strips	0.08 – 0.2 mm²	**769-470**	200 strips
	5 pcs/strip light grey	0.25 – 0.5 mm²	**769-471**	200 strips	0.25 – 0.5 mm²	**769-471**	200 strips
	dark grey	0.75 – 1 mm²	**769-472**	200 strips	0.75 – 1 mm²	**769-472**	200 strips
	**Adjacent jumper,** I_N 24 A	grey	**280-402**	200 (8 x 25)	yellow-green	**280-422**	200 (8 x 25)
	insulated						
	Alternate jumper	grey	**280-409**	100 (4 x 25)	grey	**280-409**	100 (4 x 25)
	**Staggered jumper ❷,** from 1 to 2	I_N 24 A	**780-452**	100 (4 x 25)	I_N 24 A	**780-452**	100 (4 x 25)
	insulated, from 1 to 3		**780-453**	100 (4 x 25)		**780-453**	100 (4 x 25)
	width 5 mm / 0.197 in from 1 to 4		**780-454**	100 (4 x 25)		**780-454**	100 (4 x 25)
	from 1 to 5		**780-455**	50 (2 x 25)		**780-455**	50 (2 x 25)
	:		:			:	
	from 1 to 8		**780-458**	50 (2 x 25)		**780-458**	50 (2 x 25)
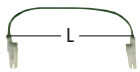	**Push-in type wire jumper ❷,**	L = 60 mm / 2.362 in	**249-125**	10	L = 60 mm / 2.362 in	**249-125**	10
	insulated, 9 A – conductor	L = 110 mm / 4.331 in	**249-126**	10	L = 110 mm / 4.331 in	**249-126**	10
	cross section 0.75 mm²/AWG 18	L = 250 mm / 9.843 in	**249-127**	10	L = 250 mm / 9.843 in	**249-127**	10
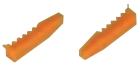	**Coding pin,**						
	for coding of female plugs	orange	**769-435**	100 (4 x 25)	orange	**769-435**	100 (4 x 25)
	**Protective warning marker,**						
	for 5 terminal blocks,	yellow	**280-415**	100 (4 x 25)			
	fits into screwdriver slot						
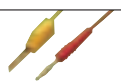	**Test plug,** w. cable 500 mm/1'7.7"						
	2 mm/0.079 in Ø	red	**210-136**	50 (5 x 10)	red	**210-136**	50 (5 x 10)
	2.3 mm/0.091 in Ø	yellow	**210-137**	50 (5 x 10)	yellow	**210-137**	50 (5 x 10)
	**Test plug module,**	Item numbers and application notes see			Item numbers and application notes see		
	for test using jumper position in	Full Line Catalog W4 Volume, pages 2.38 – 2.40			Full Line Catalog W4 Volume 1, pages 2.38 – 2.40		
	current bar or cond. wire opening						
	**Test plug adapter**	5 mm / 0.197 in wide			5 mm / 0.197 in wide		
			280-404	100 (4 x 25)		**280-404**	100 (4 x 25)
		for test plug 210-137 (Ø 2.3 mm)			for test plug 210-137 (Ø 2.3 mm)		
	**1-conductor female plug,**						
	straight or angled	see Full Line Catalog W4 Volume 1, pages 9.44/9.46			see Full Line Catalog W4 Volume 1, pages 9.44/9.46		
	**2-conductor female plug**						
		see Full Line Catalog W4 Volume 1, page 9.45			see Full Line Catalog W4 Volume 1, page 9.45		

* Further approvals with corresponding ratings can be found at www.wago.com

Types of Assembly
2-Conductor/1-pin Receptacle Terminal Blocks and 1-/2-Conductor Female Plugs

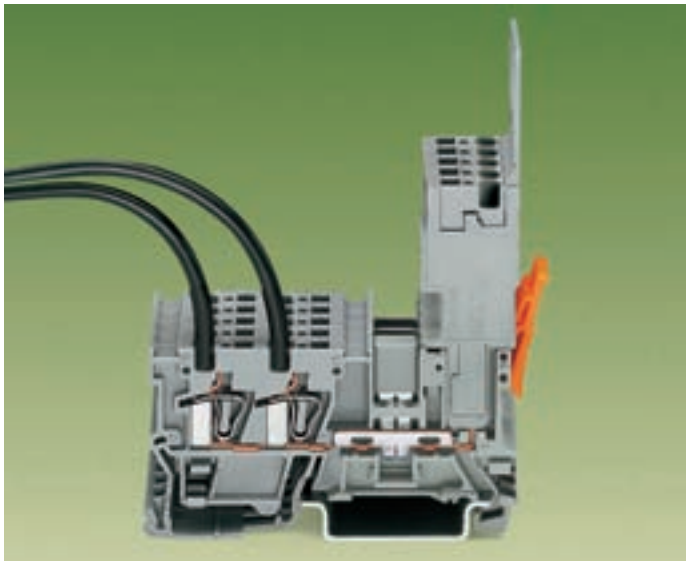

1-conductor female plug straight and angled
series 280 and 780, and testing possibility with test plug adapter 280-4..

Commoning possibility of receptacle terminal blocks with jumper contact systems,

2-conductor female plug

Commoning possibility of receptacle terminal blocks only with adjacent jumpers and alternate jumpers, series 280

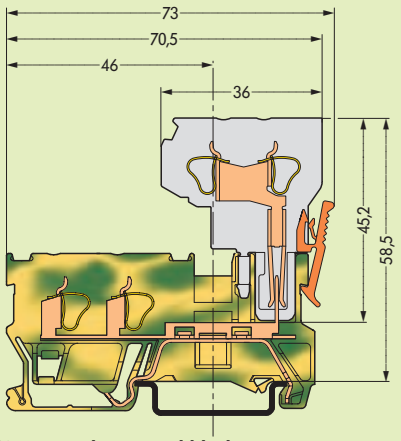

Ground (earth) receptacle terminal block

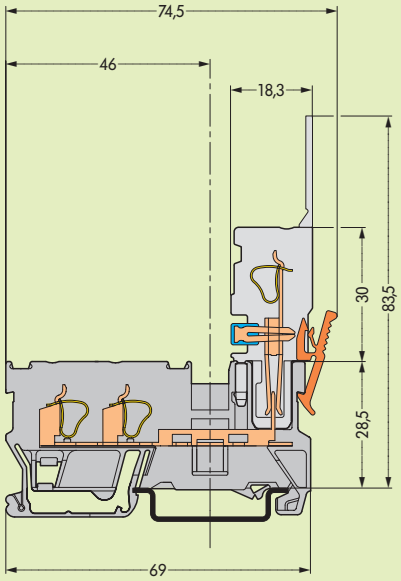

Receptacle terminal block

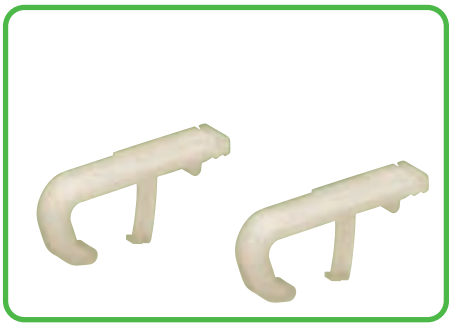

Operating lever, loose,
for female plugs and male connectors
with CAGE CLAMP® connection
Item number: **769-434**

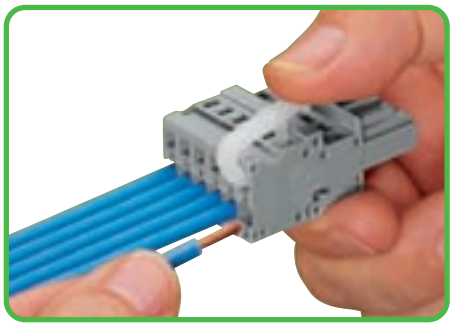

Wire connection using operating lever

X-COM® SYSTEM
1-Conductor/1-Conductor
Disconnect Receptacle Terminal Blocks with 2 Jumper Positions

0.08 – 4 mm² | **AWG 28 – 12**
400 V/6 kV/3 ❶ | **300 V, 10 A**
I_N 32 A

Terminal block width 5 mm / 0.197 in
8 – 9 mm / 0.33 in

❶ 500 V = rated voltage
6 kV = rated surge voltage
3 = pollution degree
(see also Full Line Catalog W4 Volume 1, Section 15)
❷ See application notes in our Full Line Catalog W4 Volume 1, pages 2.43 – 2.45

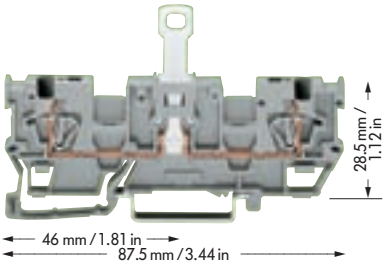

Description			Item No.	Pack. unit pcs
1-conductor/1-conductor disconnect receptacle terminal block without/with shield (screen) contact and 2 jumper positions, suitable for DIN 35 rail acc. to EN 60715		**1-cond./1-cond. disconnect receptacle term. block** grey	**769-242**	50
		1-cond./1-cond. disconnect receptacle term. block with shield (screen) contact (no picture) grey	**769-243**	50
Accessories appropriate marking system **Mini-WSB** (see also Full Line Catalog W4 Volume 1, Section 14)				
	End and intermediate plate	1.1 mm / 0.043 in thick grey	**769-317**	100 (4 x 25)
		orange	**769-318**	100 (4 x 25)
	Separator plate, oversized	1.1 mm / 0.043 in thick orange	**769-319**	100 (4 x 25)
	Screwless end stop	6 mm / 0.236 in wide	**249-116**	100 (4 x 25)
		10 mm / 0.394 in wide	**249-117**	50 (2 x 25)
	Insulation stop ❷, white	0.08 – 0.2 mm²	**769-470**	200 strips
	5 pcs/strip light grey	0.25 – 0.5 mm²	**769-471**	200 strips
	dark grey	0.75 – 1 mm²	**769-472**	200 strips
	Adjacent jumper, I_N 24 A insulated	grey	**280-402**	200 (8 x 25)
	Alternate jumper	grey	**280-409**	100 (4 x 25)
	Staggered jumper ❷, from 1 to 2	I_N 24 A	**780-452**	100 (4 x 25)
	insulated, from 1 to 3		**780-453**	100 (4 x 25)
	width 5 mm / 0.197 in from 1 to 4		**780-454**	100 (4 x 25)
	from 1 to 5		**780-455**	50 (2 x 25)
	:		:	
	from 1 to 8		**780-458**	50 (2 x 25)
	Push-in type wire jumper ❷,	L = 60 mm / 2.362 in	**249-125**	10
	insulated, 9 A – conductor	L = 110 mm / 4.331 in	**249-126**	10
	cross section 0.75 mm²/AWG 18	L = 250 mm / 9.843 in	**249-127**	10
	Protective warning marker, for 5 terminal blocks fits into screwdriver slot,	yellow	**280-415**	100 (4 x 25)
	Test plug, w. cable 500 mm/1'7.7"			
	Ø 2 mm / 0.079 in	red	**210-136**	50 (5 x 10)
	Ø 2.3 mm / 0.091 in	yellow	**210-137**	50 (5 x 10)

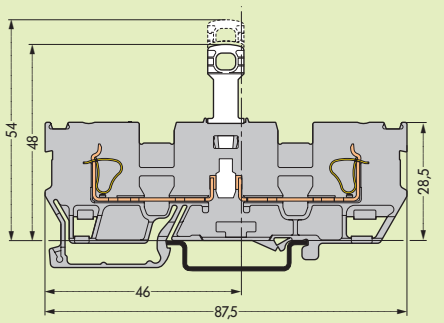

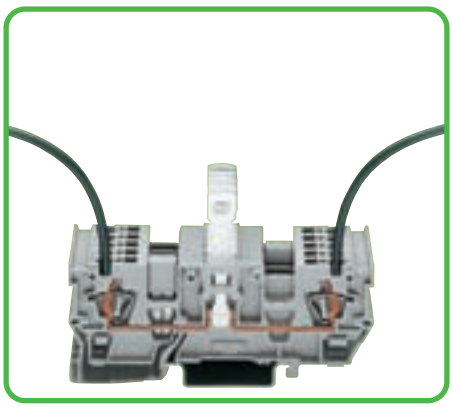

X-COM®-SYSTEM
2-Conductor/2-Pin Double Deck Receptacle Terminal Blocks
Series 870

	500 V/6 kV/3 ❶ I_N 16 A Terminal block width 5 mm / 0.197 in	Terminal block width 5 mm / 0.197 in





❶ 500 V = rated voltage
6 kV = rated surge voltage
3 = pollution degree
(see also Full Line Catalog W4 Volume 1, Section 15)

Description		Item No.	Pack. unit pcs		Item No.	Pack. unit pcs
2-pin/2-pin double deck receptacle terminal block, suitable for DIN 35 rail	**Through/through terminal blocks,** housing color grey					
	L/L	**870-151**	50			
4-pin double deck receptacle terminal block, suitable for DIN 35 rail				**4-pin ground (earth) conductor terminal block,** internal commoning, housing color green-yellow		
				PE	**870-157**	50
Accessories	appropriate marking system **WMB/Mini-WSB** (see also Full Line Catalog W4 Volume 1, Section 14)					
 **End and intermediate plate**	1 mm/0.039 in thick			1 mm/0.039 in thick		
	grey	**870-168**	100 (4 x 25)	grey	**870-168**	100 (4 x 25)
	orange	**870-169**	100 (4 x 25)	orange	**870-169**	100 (4 x 25)
 **Push-in type jumper bars,** light grey, insulated, I_N 18 A	2-way	**870-402**	200 (8 x 25)	2-way	**870-402**	200 (8 x 25)
	3-way	**870-403**	200 (8 x 25)	3-way	**870-403**	200 (8 x 25)
	4-way	**870-404**	200 (8 x 25)	4-way	**870-404**	200 (8 x 25)
	5-way	**870-405**	100 (4 x 25)	5-way	**870-405**	100 (4 x 25)
	:	:		:	:	
	10-way	**870-410**	100 (4 x 25)	10-way	**870-410**	100 (4 x 25)
 **Push-in type jumper bars,** light grey, insulated, I_N 18 A						
	from 1 to 3	**870-433**	200 (8 x 25)	from 1 to 3	**870-433**	200 (8 x 25)
	from 1 to 4	**870-434**	200 (8 x 25)	from 1 to 4	**870-434**	200 (8 x 25)
	from 1 to 5	**870-435**	100 (4 x 25)	from 1 to 5	**870-435**	100 (4 x 25)
	:	:		:	:	
	from 1 to 10	**870-440**	100 (4 x 25)	from 1 to 10	**870-440**	100 (4 x 25)
 **Miniature WSB quick marking card,** 10 strips with 10 markers each, white with black printing	see Full Line Catalog W4 Volume 1, Section 14			see Full Line Catalog W4 Volume 1, Section 14		
 **1-connector female plug,** straight	see Full Line Catalog W4 Volume 1, Section 9			see Full Line Catalog W4 Volume 1, Section 9		
 **1-connector female plug,** angled	see Full Line Catalog W4 Volume 1, Section 9			see Full Line Catalog W4 Volume 1, Section 9		

Types of Assembly
2-Pin/2-Pin Double Deck Receptable Terminal Blocks with Straight female Plugs

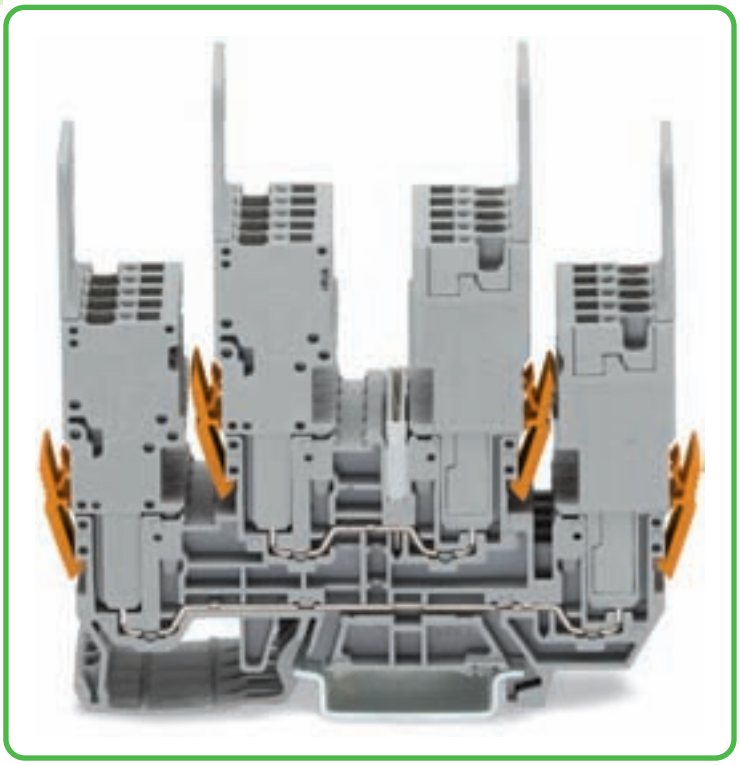

1-conductor female plug angled

Commoning possibility of double deck receptacle terminal blocks with 870 Series push-in type jumper bars, and testing possibility with removable terminal block module 870-425

Attention: 2-conductor female plugs cannot be used

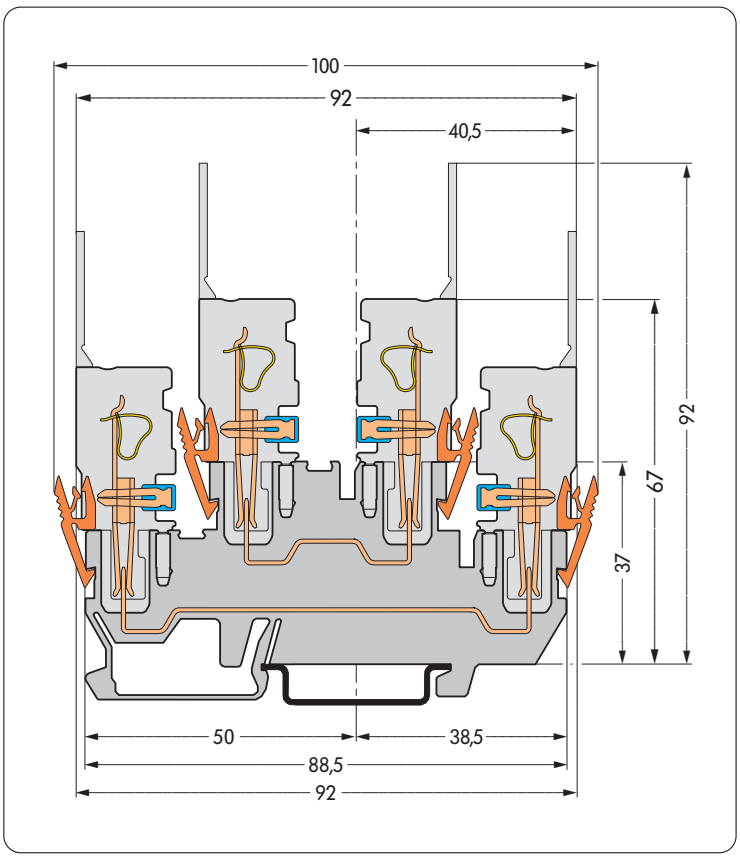

Types of Assembly
2-Pin/2-Pin Double Deck Receptable Terminal Blocks with Angled Female Plugs

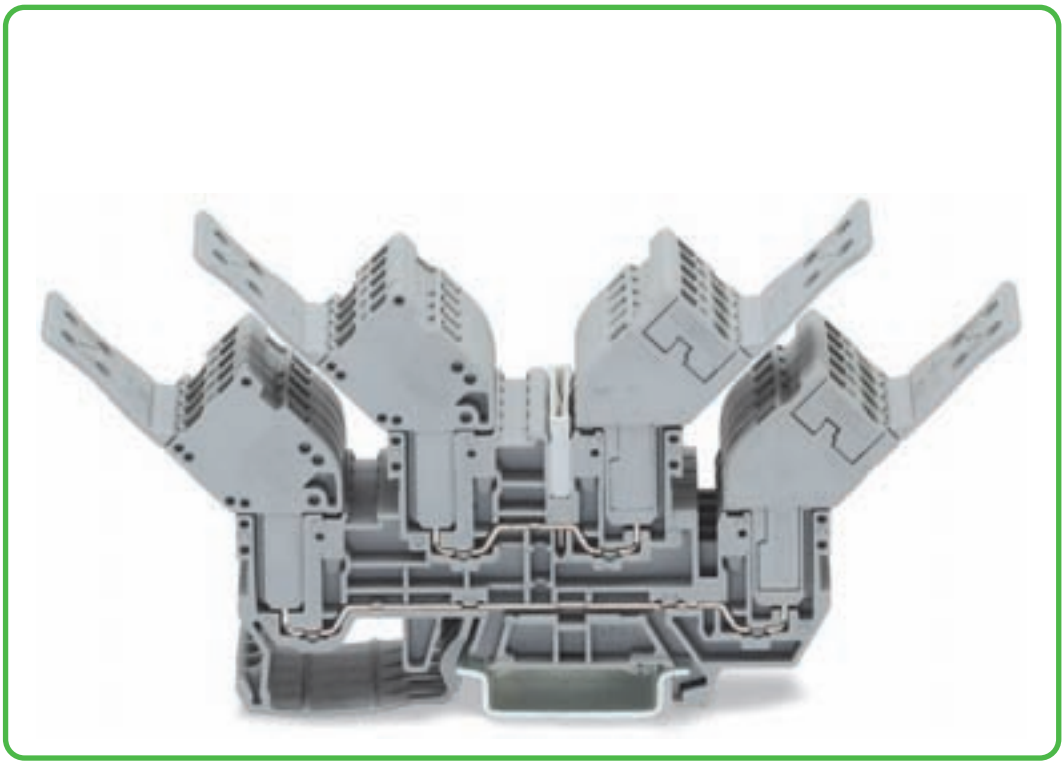

1-conductor-female plug
angled

Commoning possibility of double deck receptacle terminal blocks with 870 Series push-in type jumper bars, and testing possibility with removable terminal block module 870-425

Attention: 2-conductor female plugs cannot be used

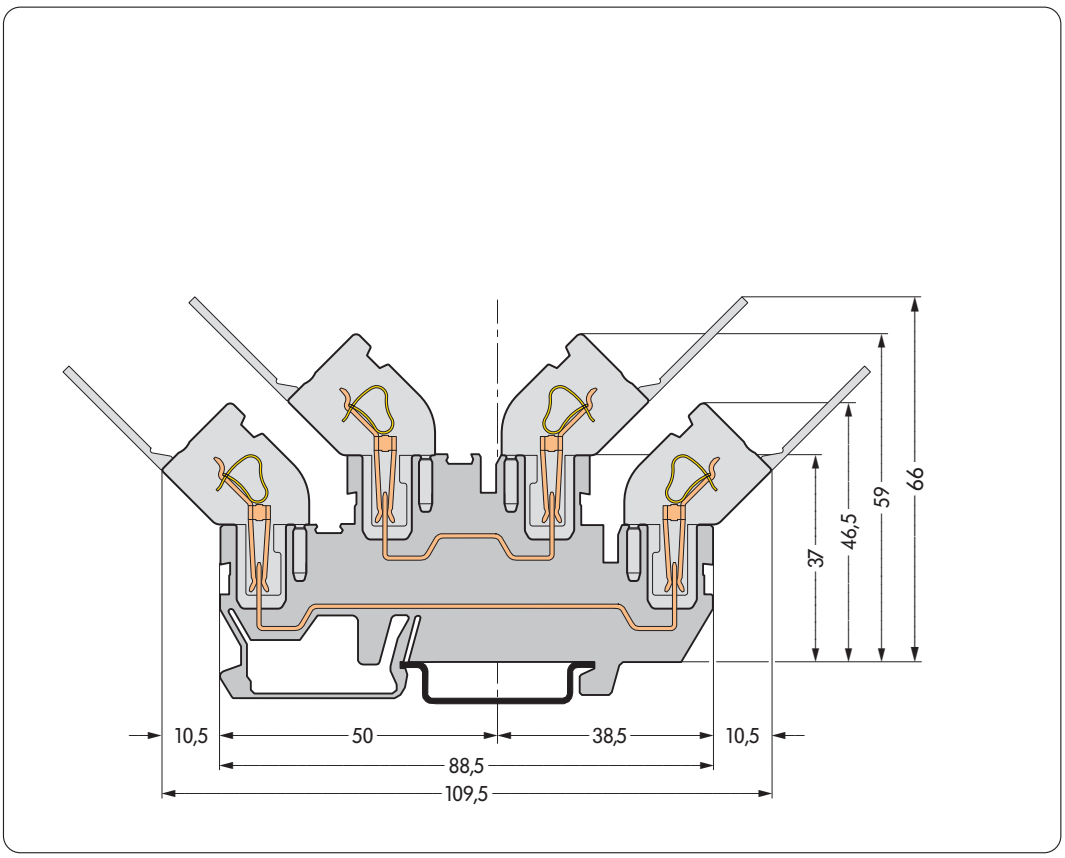

X-COM®-SYSTEM
Blue Components

0.08 – 4 mm² / AWG 28 – 12 500 V/6 kV/3 ❶ / 300/600 V, 10/5 A I_N 32 A** / 300 V, 10 A Module width 5 mm / 0.197 in 8 – 9 mm / 0.33 in *	0.08 – 4 mm² / AWG 28 – 12 500 V/6 kV/3 ❶ I_N 32 A** Module width 5 mm / 0.197 in 8 – 9 mm / 0.33 in	0.08 – 4 mm² / AWG 28 – 12 500 V/6 kV/3 ❶ I_N 32 A** Terminal block width 5 mm / 0.197 in 8 – 9 mm / 0.33 in











No. of poles	Item No.	Pack. unit pcs
1-conductor female plugs, with coding fingers, blue, commoning possibility with miniature adjacent jumpers		
1 pole	**769-101/000-006**	200
2 poles	**769-102/000-006**	100
3 poles	**769-103/000-006**	50
4 poles	**769-104/000-006**	50
5 poles	**769-105/000-006**	50
6 poles	**769-106/000-006**	50
7 poles	**769-107/000-006**	50
8 poles	**769-108/000-006**	50
9 poles	**769-109/000-006**	50
10 poles	**769-110/000-006**	50
11 poles	**769-111/000-006**	50
12 poles	**769-112/000-006**	50
13 poles	**769-113/000-006**	50
14 poles	**769-114/000-006**	50
15 poles	**769-115/000-006**	50

No. of poles	Item No.	Pack. unit pcs
1-conductor female plug, with coding fingers, grey, blue, green-yellow, commoning possibility with miniature adjacent jumpers		
3 poles	**769-103/000-038**	50
1-conductor female plug, with coding fingers, green-yellow, blue, grey, commoning possibility with miniature adjacent jumpers		
3 poles	**769-103/000-039**	50

No. of poles	Item No.	Pack. unit pcs
1-conductor female plug, with coding fingers, grey, blue, green-yellow, commoning possibility with miniature adjacent jumpers		
5 poles	**769-105/000-038**	50
1-conductor female plug, with coding fingers, green-yellow, blue, grey, commoning possibility with miniature adjacent jumpers		
5 poles	**769-105/000-039**	50

❶ 500 V = rated voltage
6 kV = rated surge voltage
3 = pollution degree

Miniature adjacent jumper,



insulated, I_N 24 A, grey,
suitable for 1-conductor female plugs
769-402 100 (4 x 25)

* Further approvals with corresponding ratings can be found at www.wago.com
** Current-carrying capacity curves and accessories see Full Line Catalog W4 Volume 1, Section 9

0.08 – 4 mm²	AWG 28 – 12
500 V/6 kV/3 ❶	300/600 V, 10/5 A
I_N 32 A**	300 V, 10 A
Module width 5 mm / 0.197 in	
8 – 9 mm / 0.33 in	
*	

0.08 – 4 mm²	AWG 28 – 12
500 V/6 kV/3 ❶	300/600 V, 10/5 A
I_N 32 A**	300 V, 10 A
Module width 5 mm / 0.197 in	
8 – 9 mm / 0.33 in	
*	

0.08 – 4 mm²	AWG 28 – 12
500 V/6 kV/3 ❶	300/600 V, 10/5 A
I_N 32 A**	300 V, 10 A
Terminal block width 5 mm / 0.197 in	
8 – 9 mm / 0.33 in	
*	







No. of poles	Item No.	Pack. unit pcs
1-conductor/1-pin receptacle terminal block,		
blue		
suitable for DIN 35 rail acc. to EN 60715		
	769-176/000-006	100

No. of poles	Item No.	Pack. unit pcs
2-conductor/1-pin receptacle terminal block,		
blue		
suitable for DIN 35 rail acc. to EN 60715		
	769-251/000-006	50

No. of poles	Item No.	Pack. unit pcs
2-conductor/2-pin receptacle terminal block,		
blue		
suitable for DIN 35 rail acc. to EN 60715		
	769-171/000-006	50

❶ 500 V = rated voltage
6 kV = rated surge voltage
3 = pollution degree

Adjacent jumper,



unsulated, I_N 24 A, grey
280-402 200 (8 x 25)

Alternate jumper,

unsulated, I_N 24 A, grey
280-409 100 (4 x 25)

X-COM®-SYSTEM
Female Plugs for Self-Assembly

	0.08 – 4 mm² / AWG 28 – 12 500 V/6 kV/3 ❶ I_N 32 A** Module width 5 mm / 0.197 in 8 – 9 mm / 0.33 in	0.08 – 4 mm² / AWG 28 – 12 500 V/6 kV/3 ❶ I_N 32 A** Module width 5 mm / 0.197 in 8 – 9 mm / 0.33 in
		

	Color	Item No.	Pack.-unit pcs	Color	Item No.	Pack.-unit pcs
	**1-conductor base module with integrated end plate**			**2-conductor base module with integrated end plate**		
	grey	**769-501**	250	grey	**769-504**	250
	blue	**769-501/000-006**	250	blue	**769-504/000-006**	250
	green-yellow	**769-501/000-016**	250	green-yellow	**769-504/000-016**	250
	**1-conductor center module**			**2-conductor center module**		
	grey	**769-502**	250	grey	**769-505**	250
	blue	**769-502/000-006**	250	blue	**769-505/000-006**	250
	green-yellow	**769-502/000-016**	250	green-yellow	**769-505/000-016**	250
	**1-conductor end module**			**2-conductor end module**		
	grey	**769-503**	250	grey	**769-506**	250
	blue	**769-503/000-006**	250	blue	**769-506/000-006**	250
	green-yellow	**769-503/000-016**	250	green-yellow	**769-506/000-016**	250
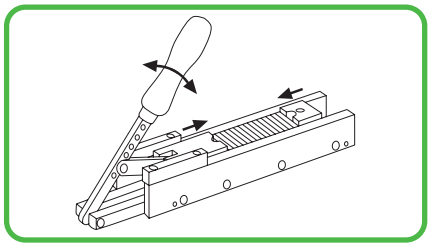	**Mounting tool**			**Mounting tool**		
		298-646	1		**298-641**	1

❶ 500 V = rated voltage
6 kV = rated surge voltage
3 = pollution degree

** Current-carrying capacity curves and accessories see Full Line Catalog W4 Volume 1, Section 9

0.08 – 4 mm² / 500 V/6 kV/3 ❶ / I_N 32 A**	AWG 28 – 12	
Module width 5 mm / 0.197 in 8 – 9 mm / 0.33 in		



Color	Item No.	Pack.-unit pcs
1-conductor base module, 45° angled, with integrated end plate		
grey	**769-512**	250
blue	**769-512/000-006**	250
green-yellow	**769-512/000-016**	250
1-conductor end module, 45° angled		
grey	**769-513**	250
blue	**769-513/000-006**	250
green-yellow	**769-513/000-016**	250
1-conductor end module, 45° angled		
grey	**769-515**	250
blue	**769-515/000-006**	250
green-yellow	**769-515/000-016**	250
Mounting tool		
	298-642	1

Self-assembly of individual female plugs

Using modular female plugs from the X-COM-SYSTEM, female plugs can be customized for applications requiring varying numbers of poles (e.g. when designing prototypes).

Modules and pole numbers

A self assembled female plug consists of a base module with integrated end plate, up to 13 center modules (corresponding to a 15-pole female plug = maximum number of poles) as well as an end module.

Female plugs with ground (earth) modules (green-yellow)

According to the "norm", connectors should be inserted and disengaged off load. This is why pre-mating the ground (earth) contact is required when connectors need to be connected or disengaged "under load".

This is guaranteed using a ground (earth) module in the middle of female plugs equipped with up to 7 poles or two ground (earth) modules at both ends of 8 - 15 pole female plugs to ensure a preceding ground (earth) connection.

Mounting

In order to guarantee that the individual modules are properly snapped into each other without damaging the locking latches, it is necessary to use the appropriate mounting tool.

Example of a 5-pole 1-conductor female plug

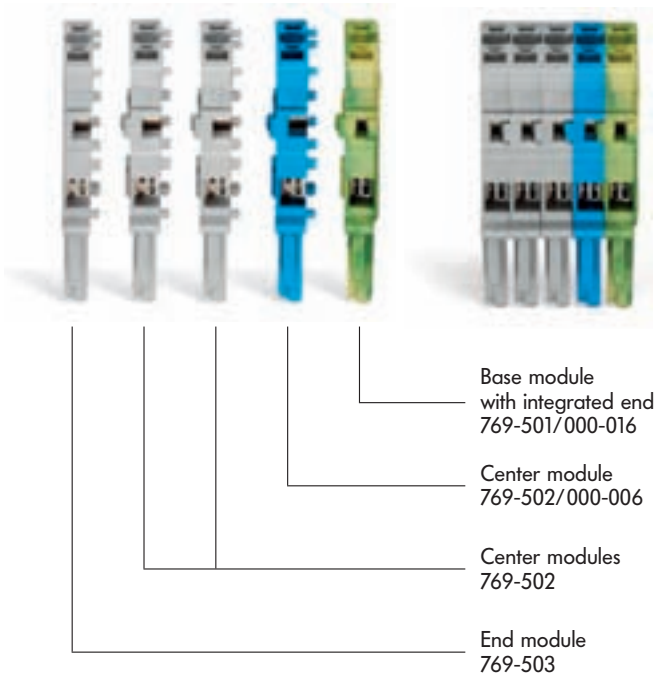

Compact Connector for Flexible Conductors
Series 222

2 x 0.08 – 2.5 mm² "s+f-st" 4 mm² "f-st" 400 V/4 kV/2** I_N 32 A 9 – 10 mm / 0.37 in *	AWG 28 – 12 600 V, 20 A	
3 x 0.08 – 2.5 mm² "s+f-st" 4 mm² "f-st" 400 V/4 kV/2** I_N 32 A 9 – 10 mm / 0.37 in *	AWG 28 – 12 600 V, 20 A	
5 x 0.08 – 2.5 mm² "s+f-st" 4 mm² "f-st" 400 V/4 kV/2** I_N 32 A 9 – 10 mm / 0.37 in * ENEC	AWG 28 – 12 600 V, 20 A	







Item No.	Pack.-unit pcs
Compact connector,	
2-wire connector, with levers	
max. continuous service temperature 85 °C	
grey **222-412**	

Item No.	Pack.-unit pcs
Compact connector,	
3-wire connector, with levers	
max. continuous service temperature 85 °C	
grey **222-413**	400 (10 x 40)

Item No.	Pack.-unit pcs
Compact connector,	
5-wire connector, with levers	
max. continuous service temperature 85 °C	
grey **222-415**	400 (10 x 40)

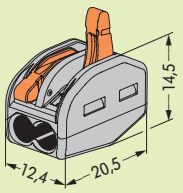

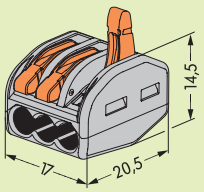

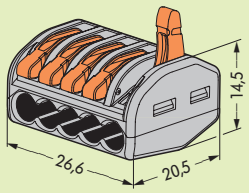

Compact connector

It clamps up to 5 stripped flexible wires of 0.08 mm²/AWG 28 to 4 mm²/AWG 12 or solid or stranded wires up to 2.5 mm²/AWG 14, without tools.

This is how it works:
Open the clamping point using one of the small orange colored levers so that the lever engages and keeps the clamping point in its open position. The wire can now be inserted, then the lever can be returned to its rest position, flush with the terminal block housing.

The safety:
The special rest position of the lever reliably prevents accidental unclamping of a connected wire. The additional application safety for any type of conductor (solid, stranded, flexible) is confirmed by approbations like ENEC or UL.

The ENEC mark is a European safety mark including 20 countries.

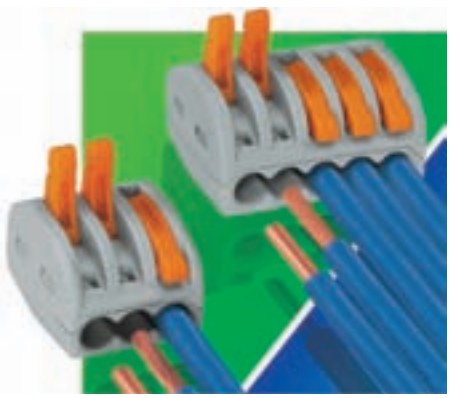

* You can find approvals on the Internet at www.wago.com.
** in grounded (earthed) supply systems

Mounting Carrier and Push-Wire Connectors for Junction Boxes Series 773

4 x 0.75 – 2.5 mm² "s" 4 x 1.5 – 2.5 mm² "str." 400 V/ 4 kV/ 2** I_N 24 A	4 x AWG 18 – 12 "sol." 4 x AWG 16 – 12 "str." 600 V, 20 A	3 x 2.5 – 6 mm² "s" 400 V/4 kV/2** I_N 41 A	AWG 14 – 10 "sol." 600 V, 30 A	Mounting carrier for push-wire connectors for junction boxes Series 773
12 mm / 0.47 in		12 – 13 mm / 0.53 in		Adapter width 18 mm / 0.71 in
*		*		





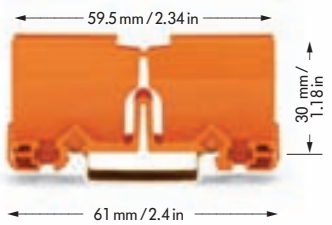

Item No.	Pack.-unit pcs	Item No.	Pack.-unit pcs	Item No.	Pack.-unit pcs
Push-wire connector for junction boxes,		**Push-wire connectors for junction boxes,**		**Mounting carrier**	
3-wire connector, black,		3-wire connector, color of housing transparent,		orange	**773-332** 50 (5 x 10)
max. continuous service temperature 150 °C		color of cover red		**Marker strips,**	
773-514	1000 (10 x 100)	**773-173**	500 (10 x 50)	plain	**210-334** 1 card

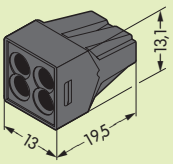

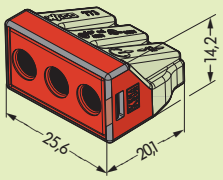

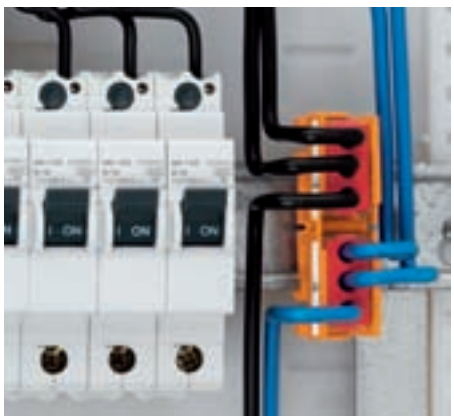

For time and cost saving push-in wiring up to 6 mm² in distribution and junction boxes as well as other equipment.

As an addition to the 273 Series push wire connectors for AWG 16 to AWG 12 (1.5 – 4 mm²), the new 3-conductor push wire connector expands the range of wire sizes up to AWG 10 (6 mm²) and is suitable for both solid and fine-stranded wires.

A mounting carrier (see accessories) is suitable for applications where the connectors must be marked and fixed in position. The carrier fits up to two connectors on DIN 35 carrier rails or screw mounting on level surfaces.

Using this push wire connector, a large range of wiring applications can be realized in distribution or junction boxes, for example. To mention just a few: potential multiplication of an AWG 10 (6 mm²) conductor in a junction box, changing from or to AWG 10 (6 mm²) wire size.



Shield (Screen) Clamps, Carrier with Grounding Foot
Series 790, 791

Shield (Screen) Clamps	Carrier with grounding foot	Carrier with grounding foot
Note: **Cannot be used for the connection of ground (earth) conductors!**		







			Pack.-unit pcs		Item No.	Pack.-unit pcs		Item No.	Pack.-unit pcs
Shield (screen) clamps				**Carrier w. grounding foot,**			**Carrier w. grounding foot,**		
				for DIN 35 rail, bar parallel to the rail,			for DIN 35 rail, bar parallel to the rail,		
		Diameter of		10 mm (0.394 in) x 3 mm (0.118 in), bar a. foot –			10 mm (0.394 in) x 3 mm (0.118 in), bar a. foot –		
H_{max}	B	connectable conductor		Cu with tin plating			Cu with tin plating		
40 mm	10 mm	1.5 mm to 6.5 mm	**791-107**	15 mm long/0.59 in	**790-110**	25	45 mm long/1.772 in	**790-114**	25
47 mm	17 mm	5 mm to 11 mm	**791-111**						
				Carrier w. grounding foot,					
63 mm	23 mm	10 mm to 17 mm	**791-117**	for DIN 35 rail, bar parallel to the rail,					
				10 mm (0.394 in) x 3 mm (0.118 in), bar a. foot –					
78 mm	30 mm	16 mm to 24 mm	**791-124**	Cu with tin plating					
				25 mm long/0.98 in	**790-112**	25			

Dimensions (in mm), **Application notes**

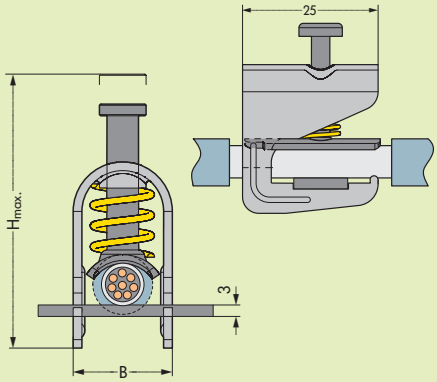

Item No.	Length	suitable shield (screen) clamping saddle	
		790-	**791-**
790-110	15 mm / 0.59 in	**max. 790-108**	**–**
790-112	25 mm / 0.98 in	**max. 790-116**	**791-111, 791-117**
790-114	45 mm / 1.772 in	**790-108 to 790-140**	**791-111 to 791-124**
		see Full Line Catalog W4 Volume 1, Section 12	

Busbar Carrier	Busbar Carrier	Shield termination







	Item No.	Pack.-unit pcs
Busbar Carrier		
for busbars Cu 10 mm x 3 mm		
	790-300	

	Item No.	Pack.-unit pcs
Busbar Carrier		
for busbars Cu 10 mm x 3 mm		
	790-301	

	Item No.	Pack.-unit pcs
Shield termination		
including cable tie		
for shield diameter		
5 mm / 0.197 in to 10 mm / 0.394 in		
55 mm / 2.17 in long	**709-350**	100 (4 x 25)
150 mm / 5.9 in long	**709-352**	100 (4 x 25)



Remove the busbar carrier using a screwdriver (blade width 5.5 mm / 0.217 in)



To remove the busbar, compress the spring using pliers



Dimensions (in mm)

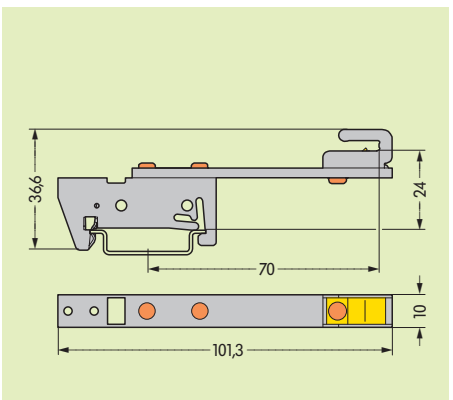

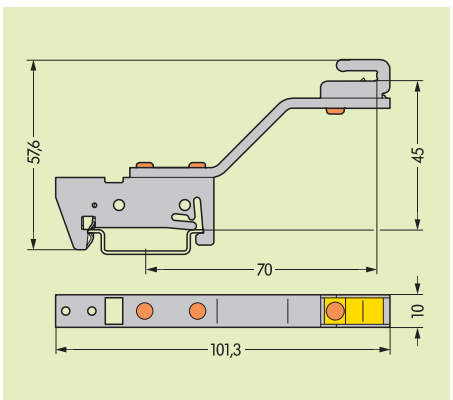

Wire marking



The following marker cards are available: Marker cards for plotter marking ...



... or marker cards on roll for thermal transfer printing



Remove the thermal transfer printed marker card from the roll ...



Slide the plotted marker card into the marking sleeve receptacle. Changing the marking is also possible after the wire has been connected

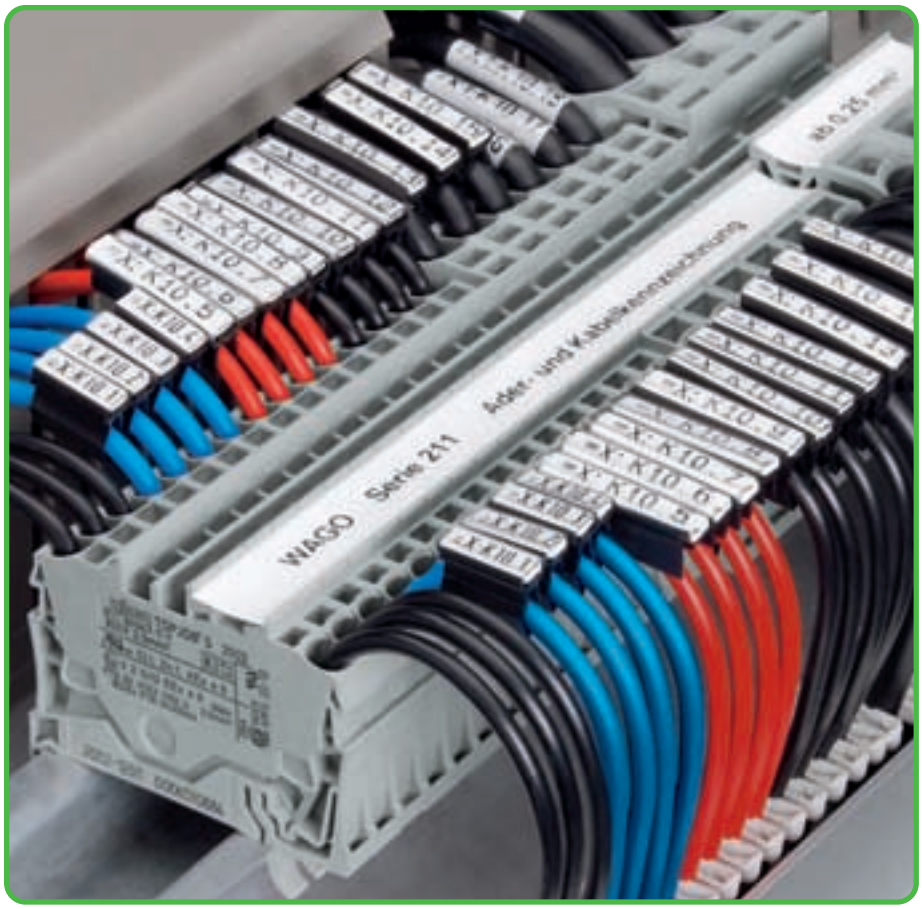

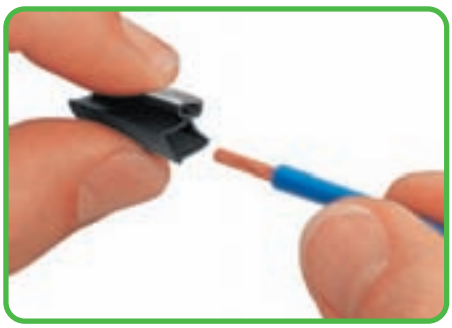

Compress the sleeve and slide it onto the wire to be marked

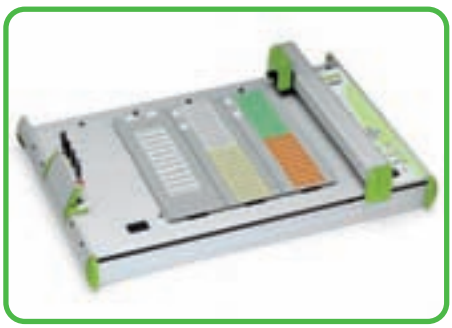

Plotter IP 350



WAGO smart Marking software (see also Full Line Catalog W4 Volume 1, Section 14)



Thermal transfer printer TP 298

. . . Description and Handling



… and slide it through the marker receptacle up to the end of the sleeve …



… then remove the rest of the card by twisting it off



Fix the marking sleeve 211-129 using cable ties to individual wire or cable



Cable marking



Self-laminating labels are available on A4 sheets for the laser printer (plotter) …



… or are supplied on roll for the thermal transfer printer



Remove the printed label from the sheet or roll …



… and wrap it around the wire or cable



The transparent laminate protects the marking

Wire marking sleeve, halogen-free for marker card, for wires ranging from AWG 24 to 4 (0.25mm² to 16 mm²) (to be fitted before wire connection)



Item No.	Pack.-unit pcs
Marking sleeve	
12 mm long / 0.472 in	
for wire Ø 1.6 – 3.2 mm	
or AWG 24 – 16 (0.25 mm² – 1.5 mm²)	
211-112	2000
for wire Ø 2.2 – 4.5 mm	
or AWG 20 – 12 (0.5 mm² – 4 mm²)	
211-113	2000
for wire Ø 3.7 – 5.9 mm	
or AWG 14 – 10 (2.5 mm² – 6 mm²)	
211-114	1000
for wire Ø 4.8 – 7.5 mm	
or AWG 10 – 4 (6 mm² – 16 mm²)	
211-115	1000

Article specific accessories

Marker card, for thermal transfer printer,



12 mm long / 0.472 in, white

211-111 1 x 3000

Marker card, for plotter,



12 mm long / 0.472 in, white

211-110 18 x 57

Plotter receptacle, for marker card



258-370 1

Thermal transfer printer, TP 298



Resolution 300 dpi

258-298 1

Thermal transfer printer, TP 297



Resolution 203 dpi

258-297 1

Ink ribbon, 90 mm / 3.54 in width, 300 m roll



258-150 1

Wire marking sleeve, halogen-free for marker card, for wires ranging from AWG 24 to 4 (0.25mm² to 16 mm²) (to be fitted before wire connection)



Item No.	Pack.-unit pcs
Marking sleeve	
23 mm long / 0.9 in	
for wire Ø 1.6 – 3.2 mm	
or AWG 24 – 16 (0.25 mm² – 1.5 mm²)	
211-122	2000
for wire Ø 2.2 – 4.5 mm	
or AWG 20 – 12 (0.5 mm² – 4 mm²)	
211-123	2000
for wire Ø 3.7 – 5.9 mm	
or AWG 14 – 10 (2.5 mm² – 6 mm²)	
211-124	1000
for wire Ø 4.8 – 7.5 mm	
or AWG 10 – 4 (6 mm² – 16 mm²)	
211-125	1000

Article specific accessories

Marker card, for thermal transfer printer,



23 mm long / 0.9 in, white

211-121 1 x 3000

Marker card, for plotter,

23 mm long / 0.9 in, white

211-120 30 x 34

Plotter receptacle, for marker card



258-370 1

Plotter IP 350



258-350 1

WAGO plotter pen, line width 0.35 mm



258-228 1

WAGO disposable pen, line width 0.35 mm



258-328 1

Accessories (see also Full Line Catalog W4 Volume 1, Section 14)

Cable Marking

Cable marking sleeve, halogen-free for marker card, for wire sizes from AWG 8 (10 mm²) for cable tie (can also be fitted subsequently)	**Self-laminating labels on DIN A4 sheets or roll for cable marking.** **Cable diameter approx. 3 mm/0.118 in – 14 mm/0.55 in**	





Item No.	Pack.-unit pcs
Marking sleeve, for cable tie	
23 mm long / 0.9 in	
for wires from AWG 8 (10 mm²)	
211-129	1000

Article specific accessories

Marker card, for thermal transfer printer,	
23 mm / 0.9 in long, white	
211-121	1 x 3000
Marker card, for plotter,	
23 mm / 0.9 in long, white	
211-120	30 x 34
Plotter receptacle, for marker card	
258-370	1
Cable tie,	
(2,5 x 100) mm	
807-0090/0101-0100	25

Item No.	Pack.-unit pcs
Labels on DIN A4 sheets	
for **laser printer**	
Marker surface "S" = 9 mm x "B" = 17 mm	
"L" = 35 mm	
for max. cable Ø 8 mm / 0.315 in	
70 labels per sheet	
211-150	20
Marker surface "S" = 13 mm x "B" = 21 mm	
"L" = 56 mm	
for max. cable Ø 14 mm / 0.55 in	
32 labels per sheet	
211-151	25
Labels on roll	
for **thermal transfer printer**	
Marker surface "S" = 8 mm x "B" = 18 mm	
"L" = 35 mm	
for max. cable Ø 9 mm / 0.354 in	
9,000 labels per roll	
211-155	1
Marker surface "S" = 13 mm x "B" = 23 mm	
"L" = 51 mm	
for max. cable Ø 12 mm / 0.472 in	
5,000 labels per roll	
211-156	1

Accessories (see also Full Line Catalog W4 Volume 1, Section 14)

Thermal transfer printer, TP 298	
Resolution 300 dpi	
258-298	1
Thermal transfer printer, TP 297	
Resolution 203 dpi	
258-297	1
Ink ribbon 90 mm / 3.54 in width, 300 m roll	
258-150	1

Plotter IP 350	
258-350	1
WAGO plotter pen, line width 0.35 mm	
258-228	1
WAGO disposable pen, line width 0.35 mm	
258-328	1

Dimensions of self-laminating label (in mm)

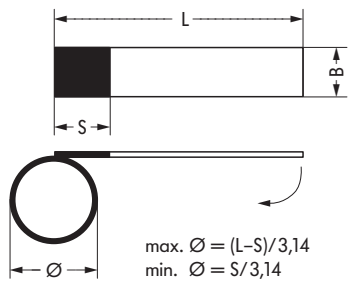

Marker carriers for WCB Combi Marking System

Marker carriers for 4 WCB markers	WCB Combi marking system 20 markers with identical numbers/letters each tag	





Item No.	Pack.-unit pcs	Marking per tag	Item No.	Marking per tag	Item No.
Marker carriers for 4 WCB markers		plain	**249-200**	A (20x)	**249-211**
2009-184		1 (20x)	**249-201**	B (20x)	**249-212**
		2 (20x)	**249-202**	C (20x)	**249-213**
suitable for terminal blocks with WMB marking		3 (20x)	**249-203**	D (20x)	**249-214**
receptacle		4 (20x)	**249-204**	E (20x)	**249-215**
		5 (20x)	**249-205**	F (20x)	**249-216**
		6 (20x)	**249-206**	G (20x)	**249-217**
		7 (20x)	**249-207**	H (20x)	**249-218**
		8 (20x)	**249-208**	I (20x)	**249-219**
		9 (20x)	**249-209**	J (20x)	**249-220**
		0 (20x)	**249-210**	K (20x)	**249-221**
				L (20x)	**249-222**
		1 . . . 0 (2x)	**249-239**	M (20x)	**249-223**
				N (20x)	**249-224**
		1. (20x)	**249-241**	O (20x)	**249-225**
		2. (20x)	**249-242**	P (20x)	**249-226**
		3. (20x)	**249-243**	Q (20x)	**249-227**
		4. (20x)	**249-244**	R (20x)	**249-228**
		5. (20x)	**249-245**	S (20x)	**249-229**
		6. (20x)	**249-246**	T (20x)	**249-230**
		7. (20x)	**249-247**	U (20x)	**249-231**
		8. (20x)	**249-248**	V (20x)	**249-232**
		9. (20x)	**249-249**	W (20x)	**249-233**
		0. (20x)	**249-250**	X (20x)	**249-234**
				Y (20x)	**249-235**
		+ (20x)	**249-237**	Z (20x)	**249-236**
		– (20x)	**249-238**		
		Pieces per packing unit: 10 tags			



Insert WCB Combi marker into marker carrier



Twist the marker carrier off the carrier holder . . .



. . . and insert the marker carrier into the WMB marking receptacle of the terminal block

Contents
Volume 2



Terminal strips for PCBs – Reflow
Pin spacing 2.5 mm/0.098 in — Series 218 — 60
Pin spacing 2.54 mm/0.1 in — Series 218 — 60

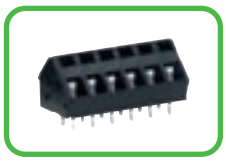

Terminal strips for PCBs – Reflow
Pin spacing 5 mm/0.197 in — Series 236 — 61
Pin spacing 2.5 mm/0.098 in — Series 250 — 61
Pin spacing 3.5 mm/0.138 in — Series 250 — 61



Terminal strips with "internal commoning"
Pin spacings 5 mm/0.197 in,
7.5 mm/0.295 in; 2.5 mm²/AWG 14 — Series 804 — 63

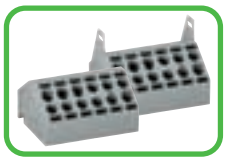

2-conductor female connector strips
with CAGE CLAMP®S connection
1.5 mm²/AWG 16 — Series 806 — 64



2-conductor modular terminal blocks and terminal strips
with CAGE CLAMP®S connection
Pin spacing 75 mm/0.295 in;
6 (10) mm²/AWG 10 — Series 746 — 65

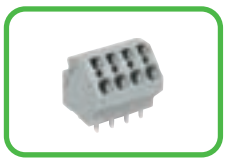

Modular terminal blocks and terminal strips without jumper slot
with CAGE CLAMP® connection
Pin spacing 5 mm/0.197 in; 4 mm²/AWG 12 — Series 745 — 66
Pin spacing 7.5 mm/0.295 in; 4 mm²/AWG 12 — Series 745 — 66 – 67
Pin spacing 10 mm/0.394 in; 4 mm²/AWG 12 — Series 745 — 66 – 67
Pin spacing 12.5 mm/0.492 in; 4 mm²/AWG 12 — Series 745 — 66 – 67

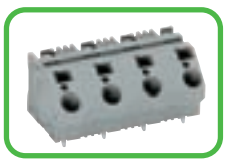

Modular terminal blocks with spacers 6 mm²
Pin spacing 7.5 mm/0.295 in, 10 mm/0.394 in — Series 745 — 68

Terminal strips with spacers 6 mm²/AWG 10
Pin spacing 10 mm/0.394 in,
12.5 mm/0.492 in, 15 mm/0.591 in — Series 745 — 69

MULTI CONNECTION SYSTEM

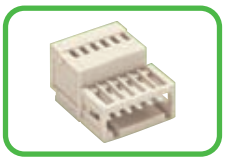

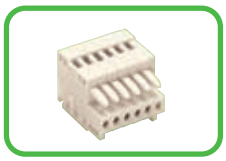

Male and female connectors
with CAGE CLAMP® connection
Pin spacing 2.5 mm/0.098 in — Series 733 — 70

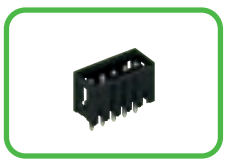

Headers with solder pins – Reflow
Pin spacing 3.5 mm/0.138 in — Series 734 — 72 – 73

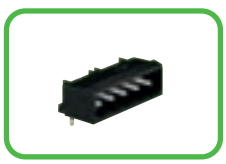

Headers with solder pins – Reflow
Pin spacing 5 mm/0.197 in — Series 231 — 74 – 75

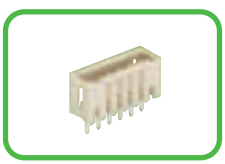

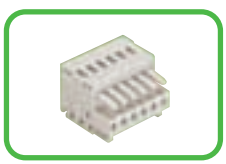

Extension of pole number - connectors,
Pin spacing 3.5 mm/0.138 in — Series 734 — 76

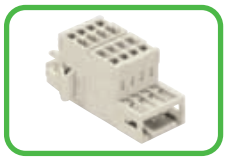

Combi strip with CAGE CLAMP® connection
Pin spacing 3.5 mm/0.138 in — Series 734 — 77



IP 20 protection using cover for male connectors
Pin spacings 3.5 mm/0.138 in, 3.81 mm/0.15 in — Series 734 — 78



Operating tools *MINI* — Series 734 — 79
MIDI — Series 231 — 79

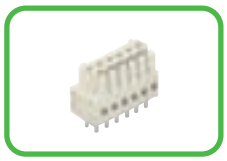

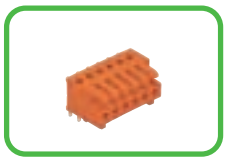

Female connectors with solder pins
Pin spacing 3.5 mm/0.138 in — Series 734 — 80
Pin spacing 3.81 mm/0.15 in — Series 734 — 81



Angled female connectors
with CAGE CLAMP® connection
Pin spacing 5 mm/0.197 in — Series 722 — 82

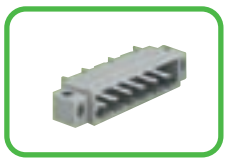



Extension of pole number

Pluggable connectors with right angle solder pins,
Pin spacing 5 mm/0.197 in — Series 231 — 83

Comb type jumper bars
Pin spacing 5 mm/0.197 in — Series 231 — 84

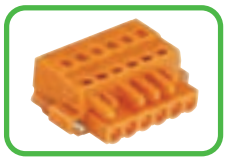

Pluggable connectors with threaded/screw flanges,
Pin spacing 5.08 mm/0.2 in — Series 231 — 85

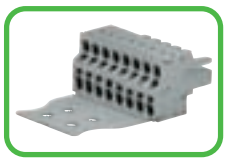

Strain relief plates for 2-conductor female connectors
with CAGE CLAMP® connection — Series 734 — 86

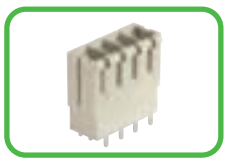



Headers with solder pins
Pin spacing 7.62 mm/0.3 in — Series 831 — 87

Headers with CAGE CLAMP® connection
Pin spacing 7.62 mm/0.3 in — Series 831 — 88

Female connectors with CAGE CLAMP® connection
and locking device
Pin spacing 7.62 mm/0.3 in — Series 831 — 89



Operating tools
Screw driver — Series 210 — 90

PCB Terminal Strips for THR Soldering
Terminal Strips with Locking Slide 0.5 mm²/AWG 20
Pin spacings 2.5 mm and 2.54 mm; Series 218

Pin spacing 2.5 mm / 0.098 in
0.08 – 0.5 mm² ❶ | AWG 28 – 20 ❶
160 V/2.5 kV/2 | 150 V, 4 A
I_N 6 A | 150 V, 4 A
5 – 6 mm / 0.22 in
*

Pin spacing 2.54 mm / 0.1 in
0.08 – 0.5 mm² ❶ | AWG 28 – 20 ❶
160 V/2.5 kV/2 | 150 V, 4 A
I_N 6 A | 150 V, 4 A
5 – 6 mm / 0.22 in
*

Terminal strips in tape on reel
Pin pacing 2.5 mm
Pin pacing 2.54 mm







No. of poles	Item No.	Pack. unit pcs
1-conductor terminal strips with locking slide,		
2 solder pins/pole in line, black,		
locking slide, white		
2	**218-102/000-604**	1000 (10 x 100)
3	**218-103/000-604**	1000 (10 x 100)
4	**218-104/000-604**	500 (5 x 100)
5	**218-105/000-604**	500 (5 x 100)
6	**218-106/000-604**	280 (4 x 70)
7	**218-107/000-604**	240 (4 x 60)
Other numbers of poles and pin spacings on request		

No. of poles	Item No.	Pack. unit pcs
1-conductor terminal strips with locking slide,		
2 solder pins/pole in line, black,		
locking slide, white		
2	**218-502/000-604**	1000 (10 x 100)
3	**218-503/000-604**	1000 (10 x 100)
4	**218-504/000-604**	500 (5 x 100)
5	**218-505/000-604**	500 (5 x 100)
6	**218-506/000-604**	280 (4 x 70)
7	**218-507/000-604**	240 (4 x 60)
Other numbers of poles and pin spacings on request		

No. of poles	Item No.	Width of reel (W)
1-conductor terminal strips with locking slide,		
2 solder pins/pole in line, black,		
locking slide, white		
Terminal strips with additional suction pad in a tape on reel according to IEC 60286-3,		
Reel diameter 330 mm / 13 in		
Pin spacing 2.5 mm / 0.098 in	Pack. unit 250 pcs	(mm)
2	**218-102/000-604/997-403**	16
3	**218-103/000-604/997-405**	32
4	**218-104/000-604/997-405**	32
5	**218-105/000-604/997-405**	32
6	**218-106/000-604/997-405**	32
7	**218-107/000-604/997-405**	32
Pin spacing 2.54 mm / 0.1 in	Pack. unit 250 pcs	(mm)
2	**218-502/000-604/997-403**	16
3	**218-503/000-604/997-405**	32
4	**218-504/000-604/997-405**	32
5	**218-505/000-604/997-405**	32
6	**218-506/000-604/997-405**	32
7	**218-507/000-604/997-405**	32

Accessories

Test pin, Ø 1 mm / 0.039 in

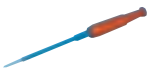

735-500 1
Test wire for sold. onto test plug

Test pin, Ø 1 mm / 0.039 in

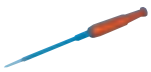

735-500 1
Test wire for sold. onto test plug

Screwdriver with partially insulated shaft,



2.5 x 0.4 mm / 0.098 in x 0.016 in
210-619 1

Screwdriver with partially insulated shaft,



2.5 x 0.4 mm / 0.098 in x 0.016 in
210-619 1





Terminal strips with white printing upon request

Dimensions (in mm)

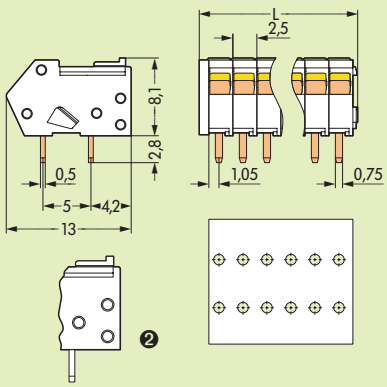

Diameter of drilled hole: $1.1^{+0.1}$ mm
L = (No. of poles x pin spacing) + 1.5 mm

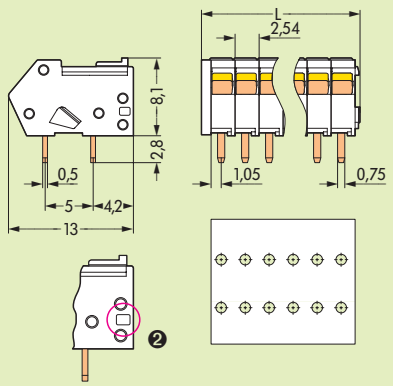

Diameter of drilled hole: $1.1^{+0.1}$ mm
L = (No. of poles x pin spacing) + 1.5 mm

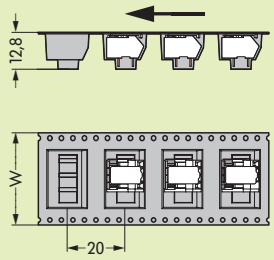

❶ in adjacent positions 0.75 mm²/AWG 18

❷ A groove at the back of the terminal block differentiates between the two pin spacings

* Further approvals with corresponding ratings can be found at www.wago.com

PCB Terminal Strips for THR Soldering Series 236 and Series 250

Pin spacing 5/ 0.197 in
0.08 – 2.5 mm² | AWG 28 – 12**
200 V/4 kV/3, I_N 16 A | 300 V, 15 A
320 V/4 kV/2, I_N 16 A
5 – 6 mm / 0.22 in
*

Pin spacing 2.5 mm / 0.098 in
0.4 – 0.8 mm Ø "s" ❷ | AWG 26 – 20 "sol."
250 V/2.5 kV/2 | 300 V, 5 A
I_N 2 A
8.5 – 9.5 mm / 0.35 in
*

Pin spacing 3.5 mm / 0.138 in
0.5 – 1.5 mm² "s+f-st" | AWG 20 – 16 "sol."
400 V/4 kV/2 | 300 V, 5 A
I_N 2 A
8.5 – 9.5 mm / 0.35 in
*

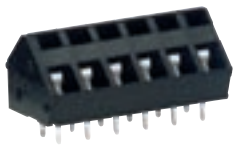





No. of poles	Item No.	Pack. unit pcs
Terminal strips, reflow soldering technology, **2 solder pins / pole,** black		
2	**236-402/334-604**	420 (4 x 105)
3	**236-403/334-604**	280 (4 x 70)
4	**236-404/334-604**	220 (4 x 55)
5	**236-405/334-604**	160 (4 x 40)
6	**236-406/334-604**	140 (4 x 35)
Other numbers of poles and pin spacings on request		

No. of poles	Item No.	Pack. unit pcs
Terminal strips with push-button, reflow soldering technology, **1 solder pin/pole staggered,** black, with test slot for test pin up to 1.3 mm Ø		
2	**250-402/350-604**	720 (4 x 180)
3	**250-403/350-604**	520 (4 x 130)
4	**250-404/350-604**	400 (4 x 100)
5	**250-405/350-604**	340 (4 x 85)
6	**250-406/350-604**	280 (4 x 70)
7	**250-407/350-604**	240 (4 x 60)
8	**250-408/350-604**	220 (4 x 55)
❷ 0.2 mm² – 0.5 mm² "f-st"		
Other numbers of poles and pin spacings on request		

No. of poles	Item No.	Pack. unit pcs
Terminal strips with push-button, reflow soldering technology, **1 solder pin/pole staggered,** black, with test slot for test pin up to 1.3 mm Ø		
2	**250-202/350-604**	560 (4 x 140)
3	**250-203/350-604**	400 (4 x 100)
4	**250-204/350-604**	300 (4 x 75)
5	**250-205/350-604**	240 (4 x 60)
6	**250-206/350-604**	200 (4 x 50)
7	**250-207/350-604**	180 (4 x 45)
8	**250-208/350-604**	160 (4 x 40)
Other numbers of poles and pin spacings on request		

Accessories



Operating tools ❶,
Plastic **236-332** 1
Metal **236-335** 1

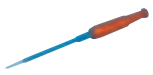

Test pin, Ø 1 mm/0.039 in
735-500 1
Test wire for sold. onto test plug

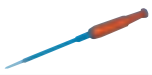

Test pin, Ø 1 mm/0.039 in
735-500 1
Test wire for sold. onto test plug

Double savings are now available with WAGO PCB terminal blocks: as always, the time-saving CAGE CLAMP® and push-wire connections and now additional savings from their suitability for the THR solder process. This is achieved by changing the length of the solder pin which is adapted to the reflow process and by the use of high temperature resistant plastic for the insulating housing.

The new terminal blocks are simply pushed into the solder paste filled PCB holes and then soldered along with the SMT components. The previous wave soldering process is no longer necessary. The result is a perfect connection both from the mechanical and the electrical point of view.

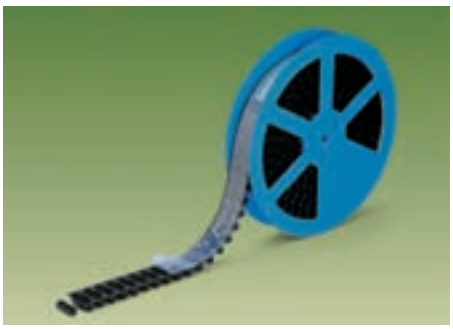

Packings for pick and place applications on request



Dimensions (in mm)

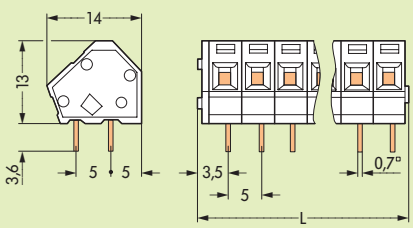

L = (No. of poles x pin spacing) + 2.3 mm
Diameter of metal plated hole 1.1$^{+0.1}$ mm
optimised for PCB width of up to 2 mm

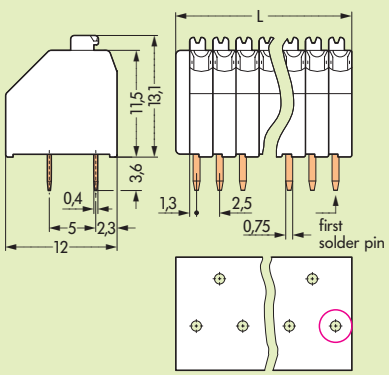

L = (No. of poles x pin spacing) + 1.5 mm
Diameter of metal plated hole 1.0$^{+0.1}$ mm
optimised for PCB width of up to 2 mm

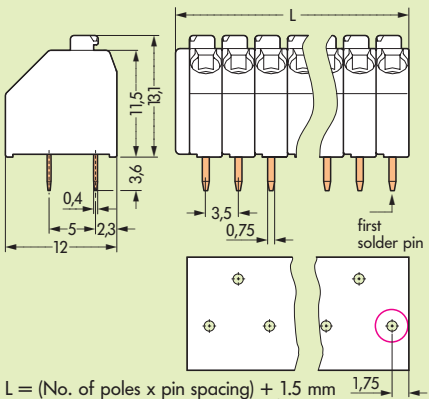

L = (No. of poles x pin spacing) + 1.5 mm
Diameter of metal plated hole 1.0$^{+0.1}$ mm
optimised for PCB width of up to 2 mm

** AWG 12: THHN, THWN ❶ for factory wiring

THR (Through-Hole-Reflow)

Design and application recommendations for the THR solder process

The THR preparation and solder process



In the manufacture of electronic products, **S**urface **M**ount **T**echnology has led to a rapid rise in productivity.

The integration of classic electromechanical components such as connectors or PCB terminal blocks into the reflow soldering process offers even more potential for economy.

By using high temperature resistant plastic and an optimized pin design, the WAGO **T**hrough **H**ole **R**eflow PCB terminal blocks meet the requirement for SMT process capability while maintaining the necessary stability.

THR product series

Series	d_i(mm)	d_A(mm)	H(mm)	d_s(mm)	D_s(µm)	d(mm)	L(mm)
734	$1.4^{+0,1}$	2.5	< 2	2.4	150	1.2	2.4
231	$1.4^{+0,1}$	2.5	< 2	2.4	150	1.2	2.4
236	$1.1^{+0,1}$	2.2	< 2	2.1	150	0.9	3.6
250	$1.0^{+0,1}$	2.0	< 2	2.1	150	0.9	3.6

d_i: Inner diameter metal plated PCB bore hole
d_A: Outer diameter metal plated PCB bore hole*
H: PCB thickness
d_s: Pattern hole diameter
D_s: Pattern thickness
d: Pin diagonal
L: Pin length

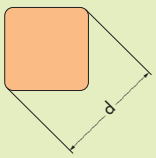

Solder pin

* When laying out the metal plated bore holes, consider the requirements of air and creepage distances of the equipment standards.

We recommend a temperature profile in accordance with EN 61760-1 and the use of forced convection ovens.

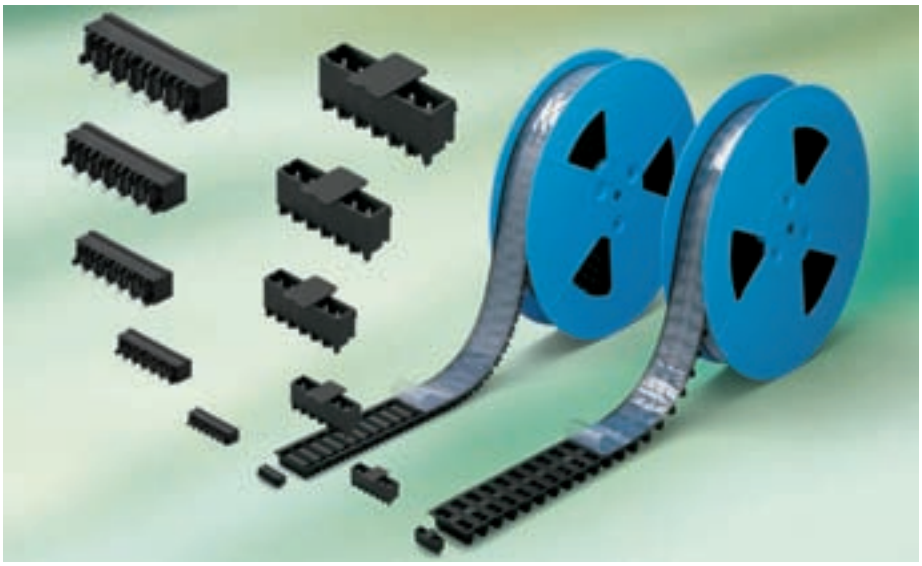

"Tape on Reel" packings for pick and place applications

Metal plated PCB bore hole

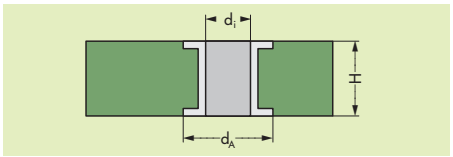

SMD positioning pattern

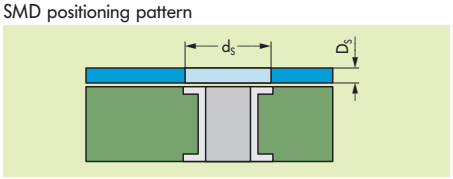

Application of solder paste

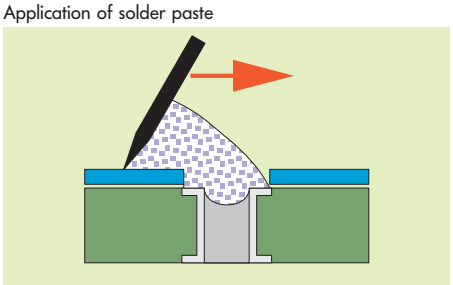

Component assembly automatic / by hand

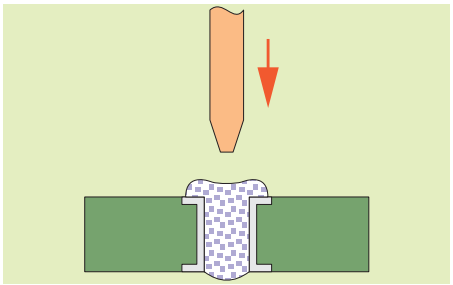

Reflow soldering process

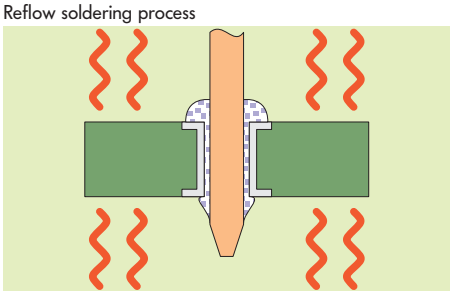

THR soldering joint

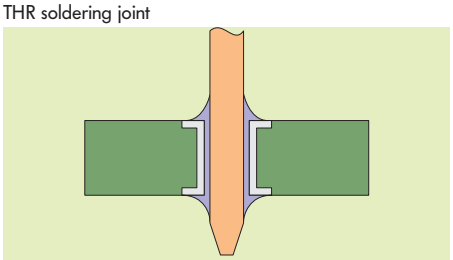

PCB Terminal Strips 2.5 mm²/AWG 14
Pin spacings 5 mm/0.197 in and 7.5 mm/0.295 in; Series 804

Pin spacing 5 mm / 0.197 in	Pin spacing 7.5 mm / 0.295 in	Accessoires
0.5 – 2.5 mm² „s+f-st" | AWG 20 – 12 "s+f-st"	0.5 – 2.5 mm² „s+f-st" | AWG 20 – 12 "s+f-st"	
250 V/4 kV/3; I_N 16 A | 300 V, 10 A	400 V/6 kV/3; I_N 16 A | 300 V, 10 A	
500 V/4 kV/2; I_N 16 A	800 V/6 kV/2; I_N 16 A	
10 – 11 mm / 0.41 in	10 – 11 mm / 0.41 in	Internal commoning
*	*	

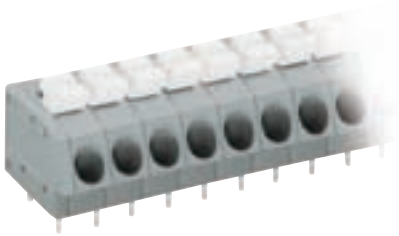



No. of poles	Item No.	Pack. unit pcs
1-conductor terminal strips with push button,		
2 solder pins/pole staggered, grey,		
with test slot for test pin Ø 1 mm/0.039 in		
2	**804-102**	420 (4 x 105)
3	**804-103**	280 (4 x 70)
4	**804-104**	220 (4 x 55)
5	**804-105**	180 (4 x 45)
6	**804-106**	140 (4 x 35)
7	**804-107**	120 (4 x 30)
8	**804-108**	100 (4 x 25)
9	**804-109**	100 (4 x 25)
10	**804-110**	80 (4 x 20)
11	**804-111**	80 (4 x 20)
12	**804-112**	60 (4 x 15)
13	**804-113**	60 (4 x 15)
14	**804-114**	60 (4 x 15)
15	**804-115**	60 (4 x 15)
16	**804-116**	40 (4 x 10)
Pin spacing 10 mm (with spacer) on request		

No. of poles	Item No.	Pack. unit pcs
1-conductor terminal strips with push button,		
2 solder pins/pole staggered, grey,		
with test slot for test pin Ø 1 mm/0.039 in		
2	**804-302**	320 (4 x 85)
3	**804-303**	220 (4 x 55)
4	**804-304**	160 (4 x 40)
5	**804-305**	120 (4 x 30)
6	**804-306**	100 (4 x 25)
7	**804-307**	80 (4 x 20)
8	**804-308**	80 (4 x 20)
9	**804-309**	60 (4 x 15)
10	**804-310**	60 (4 x 15)
11	**804-311**	60 (4 x 15)
12	**804-312**	40 (4 x 10)

	Item No.	Pack. unit pcs
Marker cards,		
	100 self-adhesive strips per card	
Print - Pin spacing 5 mm / 0.197 in		
1–12 (300 x)	**210-331/0500-0103**	1 card
13–24 (300 x)	**210-331/0500-0104**	1 card
Print - Pin spacing 7.5 mm / 0.295 in		
1–16 (100 x)	**210-331/0750-0202**	1 card
Direct printing on request		
Test pin, Ø 1 mm/0.039 in		
	735-500	1
	Test wire for sold. onto test plug	
Screwdriver with partially insulated shaft,		
	3.5 x 0.4 mm / 0.137 in x 0.016 in	
	210-620	1

Additional item number for coloured terminal strips			
red	. . . /**000-005**	Ordering example	
blue	. . . /**000-006** (1)	Terminal strip, pin spacing 5 mm / 0.197 in, 8 poles,	
orange	. . . /**000-012**	orange	**804-108/000-012**
light green	. . . /**000-017**		

(1) Terminal blocks with blue insulation are suitable for Ex i applications (only for pin spacing 7.5 mm / 0.295 in and 10 mm / 0.394 in)

Internal commoning

For example, the requirement of not routing the ground (earth) conductors over the board is met by WAGO through the "internal commoning" of 804 Series terminal strips. This way, custom terminal strips can be commoned to each other and marked at the factory.





Dimensions (in mm)

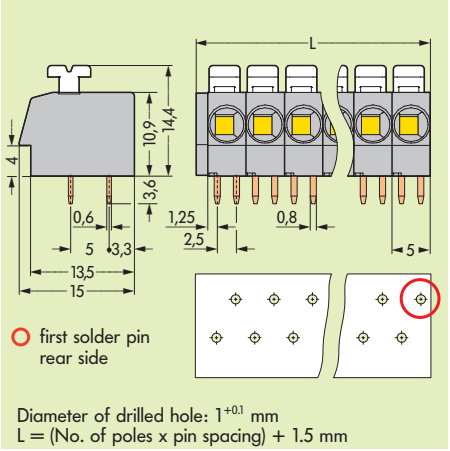

Diameter of drilled hole: $1^{+0.1}$ mm
L = (No. of poles x pin spacing) + 1.5 mm

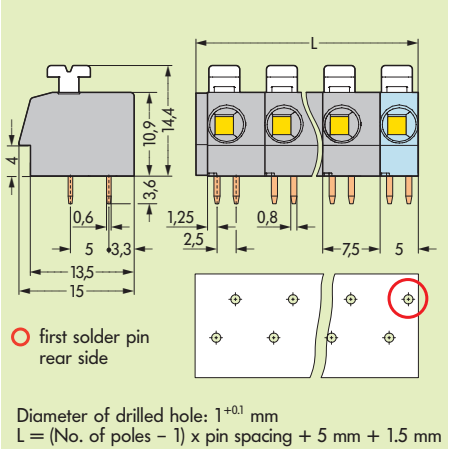

Diameter of drilled hole: $1^{+0.1}$ mm
L = (No. of poles – 1) x pin spacing + 5 mm + 1.5 mm

* Marks and approval data can be found on the Internet at www.wago.com.

2-Conductor Female Connector Strips 1.5 mm²/AWG 16
Pin Spacing 5 mm/0.197 in, Series 806

Pin spacing 5 mm / 0.197 in
2 x 0.2 – 1.5 mm² | 2 x AWG 24 – 16
250 V/2.5 kV/3 ❶ | 300 V, 10 A
I_N 10 A
9 – 10 mm / 0.37 in
*

Pin spacing 5 mm / 0.197 in
2 x 0.2 – 1.5 mm² | 2 x AWG 24 – 16
250 V/2.5 kV/3 ❶ | 300 V, 10 A
I_N 10 A
9 – 10 mm / 0.37 in
*

❶ 250 V = rated voltage
2.5 kV = rated surge voltage
3 = pollution degree
(see also Full Line Catalog W4 Volume 2, Section 12)





Connection of solid conductors:
insert stripped wire up to the stop

Connection/disconnection of fine-stranded conductors:
open clamping unit using a screwdriver and insert stripped wire up to the stop

No. of poles	Item No.	No. of poles	Item No.
Female connector strips, grey		**Female connector strips with removal aid,** grey	
for solder pin strip		for solder pin strip	
2	**806-102**	2	**806-202**
3	**806-103**	3	**806-203**
4	**806-104**	4	**806-204**
5	**806-105**	5	**806-205**
6	**806-106**	6	**806-206**
7	**806-107**	7	**806-207**
8	**806-108**	8	**806-208**
9	**806-109**	9	**806-209**
10	**806-110**	10	**806-210**
11	**806-111**	11	**806-211**
12	**806-112**	12	**806-212**
For other lengths, please contact factory		For other lengths, please contact factory	
Additional item numbers for colored terminal strips		Additional item numbers for colored terminal strips	
blue	**.../000-006** 🔵	blue	**.../000-006** 🔵
orange	**.../000-012** 🟠	orange	**.../000-012** 🟠

Accessories

Solder pin strip,	connector pin Ø 1.3 mm solder pin Ø 1 mm 2 to 12 poles **806-902** to **806-912**	**Solder pin strip,**	connector pin Ø 1.3 mm solder pin Ø 1 mm 2 to 12 poles **806-902** to **806-912**
Marker card,	with self-adhesive marker strips	**Marker card,**	with self-adhesive marker strips
1 – 16 (160 x)	**210-332/0500-0202** 1 card	1 – 16 (160 x)	**210-332/0500-0202** 1 card
Direct printing on request		Direct printing on request	

Dimensions (in mm) **Diameter of drilled hole: 1.3 mm** **L = No. of poles x pin spacing + 1.5 mm**

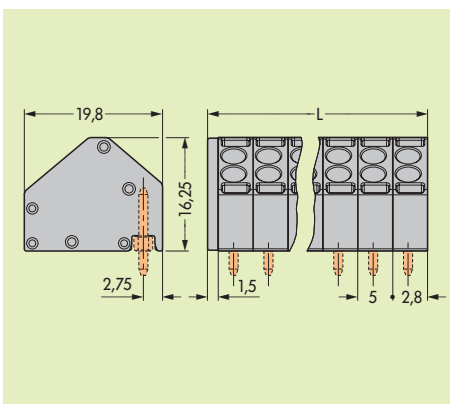

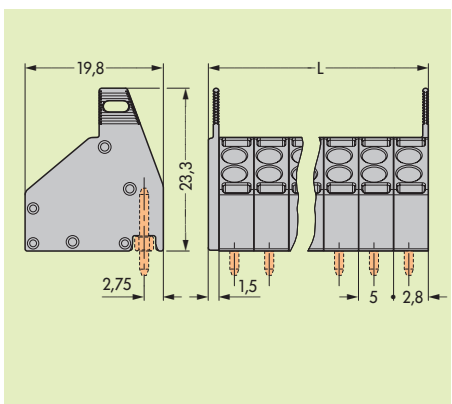


Connecting the conductor directly into the connector …
…or pre-assembled

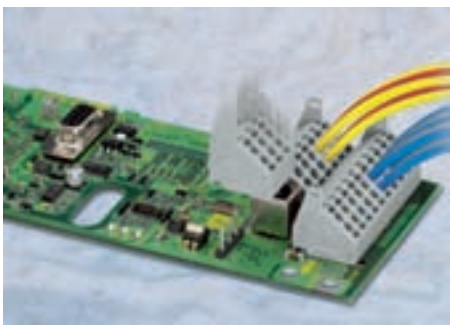
Removing the terminal blocks to place the board

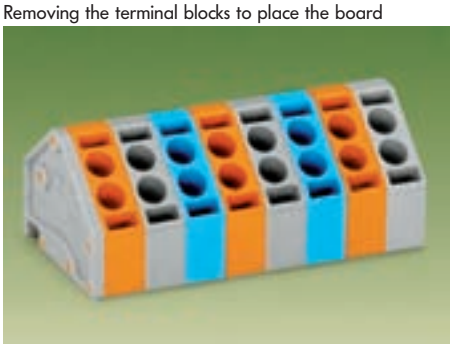
Terminal strip insulation housings mixed in different colors on request

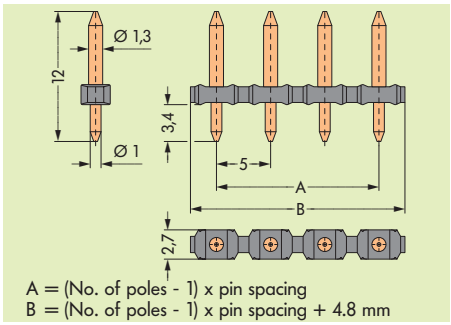

A = (No. of poles - 1) x pin spacing
B = (No. of poles - 1) x pin spacing + 4.8 mm

*Further approvals with corresponding ratings can be found at www.wago.com

Modular Terminal Blocks and Terminal Strips 6 mm²/AWG 10 CAGE CLAMP®S
Pin Spacing 7.5 mm/0.295 in; Series 746

Pin spacing 7.5 mm / 0.295 in
2 x 0.5 – 6 (10) mm² ❶ | 2 x AWG 20 – 8
400 V/6 kV/3 | 600 V, 50 A
I_N 41 A
13 – 15 mm / 0.55 in
*

❶ Push-in conductor sizes: 0,5 mm² – 10 mm² „e+f"; AWG 16 – 8 (1.5 mm² – 10 mm²) "s" and AWG 16 – 10 (1.5 mm² – 6 mm²) "insulated ferrules, 12 mm/0.472 in"



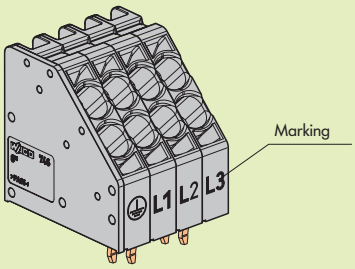



Connecting flexible wires using a screwdriver 5.5 mm

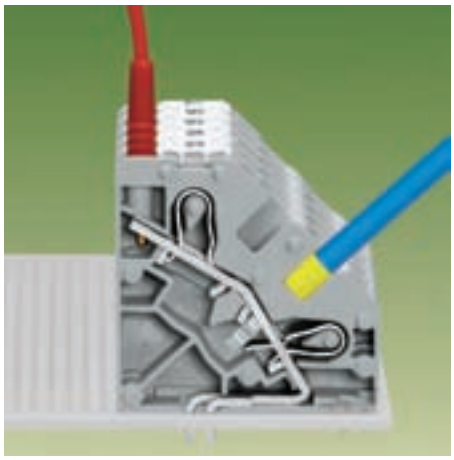

Solid wires and fine-stranded wires with ferrules can be simply pushed in

Testing with test plug Ø 2 mm/0.079 in

No. of poles	Item No.	No. of poles	Item No.
2-conductor terminal strips, grey,			
2 pins / pole staggered			
2	**746-2302**		
3	**746-2303**		
4	**746-2304**		
5	**746-2305**		
6	**746-2306**		
7	**746-2307**		
8	**746-2308**		
9	**746-2309**		
10	**746-2310**		
12	**746-2312**		
For other lengths, please contact factory			
Additional item numbers for colored terminal strips			
light grey	**.../000-009**		
blue	**.../000-006**		
green-yellow	**.../000-016**		
light green	**.../000-017**		

Accessories (Marking see Full Line Catalog W4 Volume 2, Section 11)

Screwdriver with partially insulated shaft		
	(5.5 x 0.8) mm **210-621**	
Test plug	with cable 500 mm/17.7" **210-136** 2 mm/0.079 in Ø, red **210-137** 2.3 mm/0.091 in Ø, yell.	
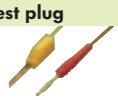		

Dimensions (in mm) **Diameter of drilled hole: 2.2 $^{+0.1}$ mm L = No. of poles x pin spacing + 2.7 mm**

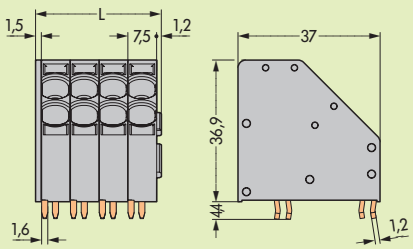

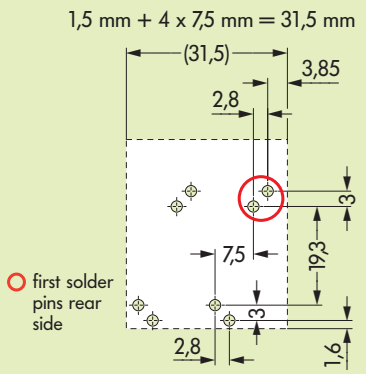

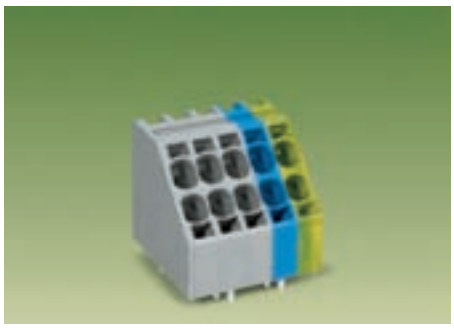

Terminal blocks of different colors upon request

Modular Terminal Blocks and Terminal Strips without Jumper Slot 4 mm²/AWG 12 Pin Spacing 5 mm/0.197 in; Series 745

Pin spacing 5 mm / 0.197 in
0.08 – 4 mm² | AWG 28 – 12
250 V/4 kV/3 | 300 V, 20 A
I_N 32 A
8 – 9 mm / 0.33 in
* cULus

Pin spacing 5 mm / 0.197 in
0.08 – 4 mm² | AWG 28 – 12
250 V/4 kV/3 | 300 V, 20 A
I_N 32 A
8 – 9 mm / 0.33 in
* cULus





Color	Item No.	Pack.-unit pcs
Modular terminal blocks without jumper slot,		
2 solder pins/pole		
grey	**745-3801**	200 (2 x 100)
light grey	**745-3803**	200 (2 x 100)
blue	**745-3804**	200 (2 x 100)
green-yellow	**745-3807**	200 (2 x 100)
light green	**745-3808**	200 (2 x 100)

Accessoires

End plate, snap-on type, 1.5 mm / 0.059 in thick



grey **745-3100** 100

Spacer, 2.5 mm / 0.098 in thick



grey **745-3138**
for extending the pin spacing

Test plug, with cable 500 mm/1'7.7"

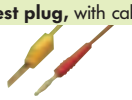

Ø 2 mm / 0.079 in, red **210-136** 50
Ø 2.3 mm / 0.091 in, yel. **210-137** 50

Dimensions (in mm)

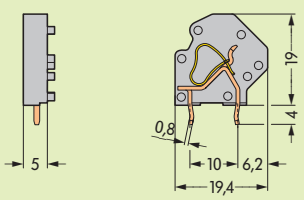

Diameter of drilled hole: 1.5 $^{+0.1}$ mm



Saving space
2 terminal strips can be arranged in front of each other

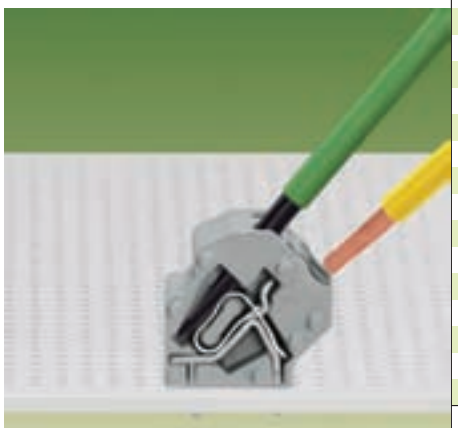

Wire connection using a screwdriver 3.5 mm / 0.138 in

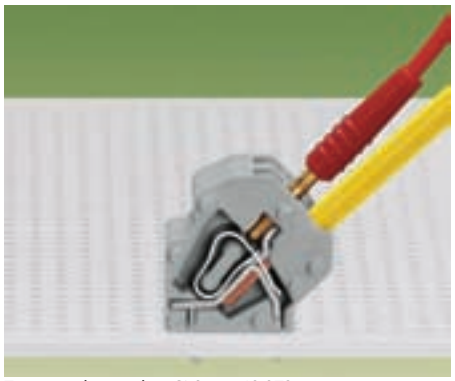

Testing with test plug Ø 2 mm / 0.079 in

No. of poles	Item No.
Terminal strips	
without jumper slot, grey,	
2 solder pins/pole	
2	**745-3102**
3	**745-3103**
4	**745-3104**
5	**745-3105**
6	**745-3106**
7	**745-3107**
8	**745-3108**
9	**745-3109**
10	**745-3110**
12	**745-3112**

For assemblies in other lengths and colours, please contact factory.

Dimensions (in mm)

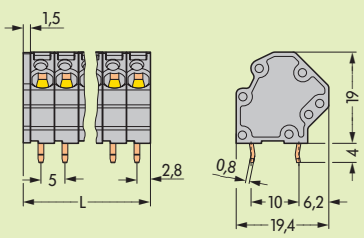

Diameter of drilled hole: 1.5 $^{+0.1}$ mm
L = No. of poles x pin spacing + 1.5 mm

* Further approvals with corresponding ratings can be found at www.wago.com

Terminal Strips
without Jumper Slot 4 mm²/AWG 12
Pin Spacings 7.5 mm/0.295 in, 10 mm/0.394 in, 12.5 mm/0.492 in; Series 745

CAGE CLAMP®

Pin spacing 7.5 mm / 0.295 in	Pin spacing 10 mm / 0.394 in	Pin spacing 12.5 mm / 0.492 in
0.08 – 4 mm² | AWG 28 – 12	0.08 – 4 mm² | AWG 28 – 12	0.08 – 4 mm² | AWG 28 – 12
500 V/6 kV/3 | 300 V, 20 A	630 V/8 kV/3 | 300 V, 20 A	630 V/8 kV/3 | 600 V, 20 A
I_N 32 A	I_N 32 A	I_N 32 A
8 – 9 mm / 0.33 in	8 – 9 mm / 0.33 in	8 – 9 mm / 0.33 in
*	*	*







No. of poles	Item No.	No. of poles	Item No.	No. of poles	Item No.
Terminal strips		**Terminal strips**		**Terminal strips**	
without jumper slot, grey,		**without jumper slot,** grey,		**without jumper slot,** grey,	
2 solder pins/pole		**2 solder pins/pole**		**2 solder pins/pole**	
2	**745-3152**	2	**745-3202**	2	**745-3252**
3	**745-3153**	3	**745-3203**	3	**745-3253**
4	**745-3154**	4	**745-3204**	4	**745-3254**
5	**745-3155**	5	**745-3205**	5	**745-3255**
6	**745-3156**	6	**745-3206**	6	**745-3256**
7	**745-3157**	7	**745-3207**	7	**745-3257**
8	**745-3158**	8	**745-3208**	8	**745-3258**
9	**745-3159**	9	**745-3209**	9	**745-3259**
10	**745-3160**	10	**745-3210**	10	**745-3260**
12	**745-3162**	12	**745-3212**	12	**745-3262**
For assemblies in other lengths and colors, please contact factory.		For assemblies in other lengths and colors, please contact factory.		For assemblies in other lengths and colors, please contact factory.	



Additional item Nos. for colored terminal strips and end plates		Ordering examples
blue	.../...-006 (1)	Terminal strip, pin spacing 5 mm/0.197 in
light grey	.../...-009	8 poles, light grey: **745-3108/000-009**
green-yellow	.../...-016 (1)	Terminal strip pin spacing 12 mm/0.492 in
light green	.../...-017	12 poles, blue: **745-3262/000-006**

(1) Suitable for EEx i applications (only suitable for pin spacings 7.5 mm/0.295 in; 10 mm/0.394 in and 12.5 mm/0.492 in)

Dimensions (in mm) (Mounting shall provide flexibility for the PCB.)

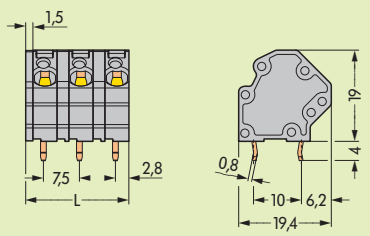

Diameter of drilled hole: 1.5 $^{+0.1}$ mm
L = (No. of poles – 1) x pin spacing + 5 mm + 1.5 mm

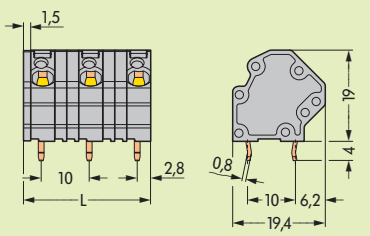

Diameter of drilled hole: 1.5 $^{+0.1}$ mm
L = (No. of poles – 1) x pin spacing + 5 mm + 1.5 mm

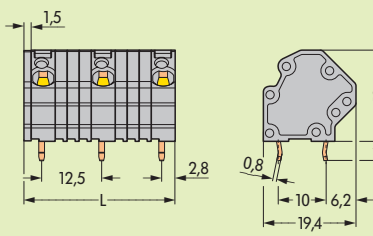

Diameter of drilled hole: 1.5 $^{+0.1}$ mm
L = (No. of poles – 1) x pin spacing + 5 mm + 1.5 mm

Modular Terminal Blocks 6 mm²/AWG 10, Series 745, Pin Spacings 7.5 mm / 0.295 in and 10 mm / 0.394 in

Pin spacing 7.5 mm / 0.295 in	Pin spacing 10 mm / 0.394 in	Spacer
0.2 – 6 mm² | AWG 24 – 10 400 V/6 kV/3 | 300 V, 30 A c UL us I_N 32 A 11 – 12 mm / 0.45 in * c UL us	0.2 – 6 mm² | AWG 24 – 10 630 V/8 kV/3 | 300 V, 30 A c UL us I_N 32 A 11 – 12 mm / 0.45 in * c UL us	







Color	Item No.	Pack.-unit pcs
Modular terminal blocks,		
2 solder pins / pole		
grey	**745-831**	100 (2 x 50)
light grey	**745-833**	100 (2 x 50)
blue	**745-834** (1)	100 (2 x 50)
green-yellow	**745-837**	100 (2 x 50)
light green	**745-838**	100 (2 x 50)
(1) suitable for Ex i applications		

Color	Item No.	Pack.-unit pcs
Modular terminal blocks,		
2 solder pins / pole		
grau	**745-841**	100 (2 x 50)
light grey	**745-843**	100 (2 x 50)
blue	**745-844** (1)	100 (2 x 50)
green-yellow	**745-847**	100 (2 x 50)
light green	**745-848**	100 (2 x 50)
(1) suitable for Ex i applications		

Color	Item No.	Pack.-unit pcs
Spacer, 2.5 mm wide		
grey	**745-338**	

Accessories

(for WMB marking accessories and miniature WSB marking accessories see Full Line Catalog W4 Volume 1, Section 11)

	**End plate,** snap-on type 1.6 mm / 0.063 in thick grey	**745-300** 100		**End plate,** snap-on type 1.6 mm / 0.063 in thick grey	**745-300** 100
	**End plate with fixing flange,** grey	**745-340** 100		**End plate with fixing flange,** grey	**745-340** 100
	**End plate with fixing flange,** grey	**745-345** 100		**End plate with fixing flange,** grey	**745-345** 100
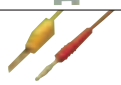	**Test plug,** w. cable 500 mm/1'7.7" Ø 2 mm / 0.079 in, red Ø 2.3 mm / 0.091 in, yel.	**210-136** 50 **210-137** 50	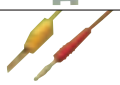	**Test plug,** w. cable 500 mm/1'7.7" Ø 2 mm / 0.079 in, red Ø 2.3 mm / 0.091 in, yel.	**210-136** 50 **210-137** 50
	**Comb type jumper bar** 1 to 3	**745-381** 250 (5 x 50)		**Comb type jumper bar** 1 to 3	**745-391** 250 (5 x 50)
	2-way 3-way 4-way	**745-382** 250 (5 x 50) **745-383** 250 (5 x 50) **745-384** 200 (4 x 50)		2-way 3-way 4-way	**745-392** 250 (5 x 50) **745-393** 250 (5 x 50) **745-394** 200 (4 x 50)
	5-way 10-way	**745-385** 200 (4 x 50) **745-380** 200 (4 x 50)		5-way 10-way	**745-395** 200 (4 x 50) **745-390** 200 (4 x 50)

Dimensions (in mm)

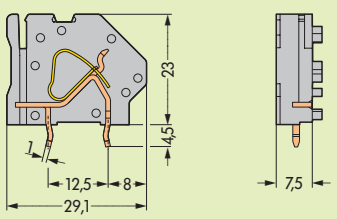

Diameter of drilled hole: 1.8 $^{+0.1}$ mm

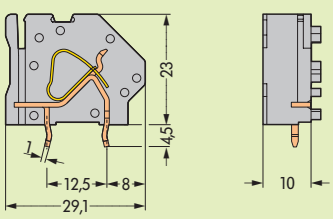

Diameter of drilled hole: 1.8 $^{+0.1}$ mm

Application notes

Higher rated voltages are possible using terminal strips with spacers so that. 600 V to UL 1059 can be achieved without limitation at only 12.5 mm / 0.492 in pin spacing.

* Further approvals with corresponding ratings can be found at www.wago.com

Terminal Strips 6 mm²/AWG 10 with Spacers
Pin Spacings 10 mm/0.394 in, 12.5 mm/0.492 in and 15 mm/0.591 in; Series 745

CAGE CLAMP®

Pin spacing 10 mm / 0.394 in	Pin spacing 12.5 mm / 0.492 in	Pin spacing 15 mm / 0.591 in
0.2 – 6 mm² | AWG 24 – 10	0.2 – 6 mm² | AWG 24 – 10	0.2 – 6 mm² | AWG 24 – 10
630 V/8 kV/3 | 300 V, 10 A ❶	800 V/8 kV/3 | 600 V, 30 A	1000 V/10 kV/3 | 600 V, 30 A
I_N 32 A	I_N 32 A	I_N 32 A
11 – 12 mm / 0.45 in	11 – 12 mm / 0.45 in	11 – 12 mm / 0.45 in
*	*	*







No. of poles	Item No.	Pack.-unit pcs
Terminal strips without fixing flanges, grey, **with spacers**		
2 solder pins / pole		
2	**745-1352**	104
3	**745-1353**	72
4	**745-1354**	48
5	**745-1355**	40
6	**745-1356**	32
7	**745-1357**	24
8	**745-1358**	24
9	**745-1359**	16
10	**745-1360**	16
12	**745-1362**	16
Additional item no. for terminal strips with fixing flanges	**.../005-000**	

❶ Using jumpers, the UL current is reduced to 10 A at pin spacing 10 mm

For assemblies in other lengths and colors, please contact factory.

No. of poles	Item No.	Pack.-unit pcs
Terminal strips without fixing flanges, grey, **with spacers**		
2 solder pins / pole		
2	**745-1402**	
3	**745-1403**	
4	**745-1404**	
5	**745-1405**	
6	**745-1406**	
7	**745-1407**	
8	**745-1408**	
9	**745-1409**	
10	**745-1410**	
12	**745-1412**	
Additional item no. for terminal strips with fixing flanges	**.../005-000**	

Additional item no. for terminal strips with fixing flanges

.../005-000

For assemblies in other lengths and colors, please contact factory.

No. of poles	Item No.	Pack.-unit pcs
Terminal strips without fixing flanges, grey, **with spacers**		
2 solder pins / pole		
2	**745-1452**	
3	**745-1453**	
4	**745-1454**	
5	**745-1455**	
6	**745-1456**	
7	**745-1457**	
8	**745-1458**	
9	**745-1459**	
10	**745-1460**	
12	**745-1462**	
Additional item no. for terminal strips with fixing flanges	**.../005-000**	

Additional item no. for terminal strips with fixing flanges

.../005-000

For assemblies in other lengths and colors, please contact factory.



Additional item nos. for colored terminal strips and end plates	
blue	.../...-006 ❶
light grey	.../...-009
green-yellow	.../...-016
light green	.../...-017

Ordering examples

Terminal strip, pin spacing 12.5 mm/0.492 in

8 poles, light grey: **745-1408/000-009**

Terminal strip with fixing flanges, pin spacing 15 mm/0.591 in

12 poles, blue: **745-1462/005-006**

❶ Suitable for Ex i applications

Dimensions (in mm) (Mounting shall provide flexibility for the PCB.)

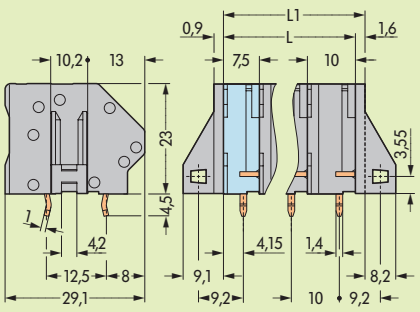

Diameter of drilled hole: $1.8^{+0.1}$ mm
L = (No. of poles – 1) x pin spacing + 7.5 mm
L1 = L + 1.6 mm ≙ without fixing flanges

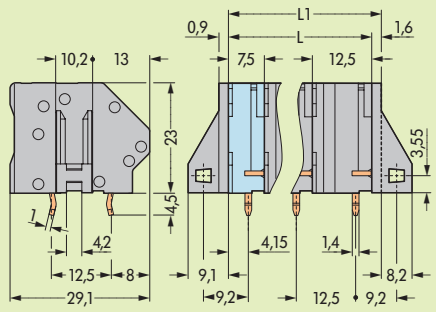

Diameter of drilled hole: $1.8^{+0.1}$ mm
L = (No. of poles – 1) x pin spacing + 7.5 mm
L1 = L + 1.6 mm ≙ without fixing flanges

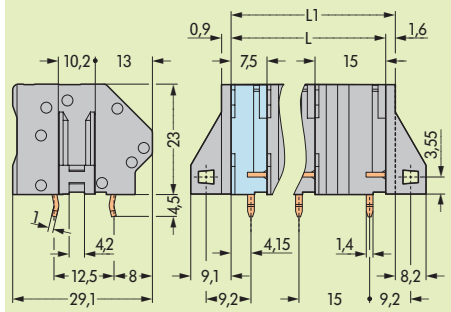

Diameter of drilled hole: $1.8^{+0.1}$ mm
L = (No. of poles – 1) x pin spacing + 7.5 mm
L1 = L + 1.6 mm ≙ without fixing flanges

MULTI CONNECTION SYSTEM ***MICRO***
Male and Female Connectors, 100 % Protected against Mismating, Pin Spacing 2.5 mm / 0.098 in

CAGE CLAMP®

Pin spacing 2.5 mm/0.098 in, light grey	Pin spacing 2.5 mm/0.098 in, light grey	Pin spacing 2.5 mm/0.098 in, light grey
0.08 – 0.5 mm² | AWG 28 – 20	0.08 – 0.5 mm² | AWG 28 – 20	0.08 – 0.5 mm² | AWG 28 – 20
250 V/2.5 kV/2 | 250 V, 4 A	250 V/2.5 kV/2 | 250 V, 4 A	250 V/2.5 kV/2 | 250 V, 4 A
I_N 4 A | 150 V, 4 A	I_N 4 A | 150 V, 4 A	I_N 4 A | 150 V, 4 A
5 – 6 mm / 0.22 in	5 – 6 mm / 0.22 in	5 – 6 mm / 0.22 in
* CCA GL BV LR NV ABS	* CCA GL BV LR NV ABS	







No. of poles	Item No.	No. of poles	Item No.	No. of poles	Item No.
Male connectors with CAGE CLAMP® connection, 100 % protected against mismating, light grey		**Female connectors with CAGE CLAMP® connection, 100 % protected against mismating,** with coding fingers, light grey		**Female connectors with CAGE CLAMP® connection and locking levers, 100 % protected against mismating,** with coding fingers, light grey	
2	**733-202**	2	**733-102**	2	**733-102/037-000**
3	**733-203**	3	**733-103**	3	**733-103/037-000**
4	**733-204**	4	**733-104**	4	**733-104/037-000**
5	**733-205**	5	**733-105**	5	**733-105/037-000**
6	**733-206**	6	**733-106**	6	**733-106/037-000**
7	**733-207**	7	**733-107**	7	**733-107/037-000**
8	**733-208**	8	**733-108**	8	**733-108/037-000**
10	**733-210**	10	**733-110**	10	**733-110/037-000**
12	**733-212**	12	**733-112**	12	**733-112/037-000**

Accessories

	**Operating tool,** see Full Line Catalog W4 Volume 2, Section 11		**Operating tool,** see Full Line Catalog W4 Volume 2, Section 11		**Operating tool,** see Full Line Catalog W4 Volume 2, Section 11
	**Coding key,** snap-on type, light grey **733-330**				
Marker card, 	100 self-adhesive strips per card	**Marker card,** 	100 self-adhesive strips per card	**Marker card,** 	100 self-adhesive strips per card
Marking 1 – 16 (400x)	**210-331/0250-0202**	Marking 1 – 16 (400x)	**210-331/0250-0202**	Marking 1 – 16 (400x)	**210-331/0250-0202**
For further printings Full Line Catalog W4 Volume 2, Section 11		For further printings Full Line Catalog W4 Volume 2, Section 11		For further printings Full Line Catalog W4 Volume 2, Section 11	
For direct printing please contact factory		For direct printing please contact factory		For direct printing please contact factory	

Dimensions (in mm)

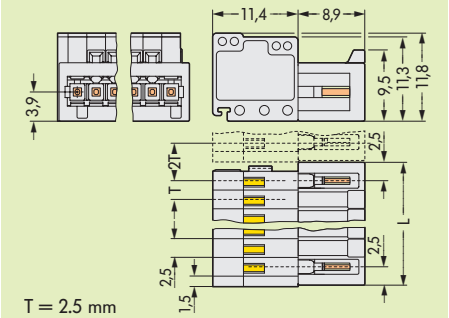

T = 2.5 mm
L = (No. of poles + 1) x pin spacing

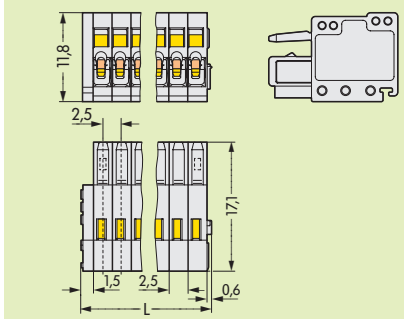

L = (No. of poles x pin spacing) + 2.1 mm

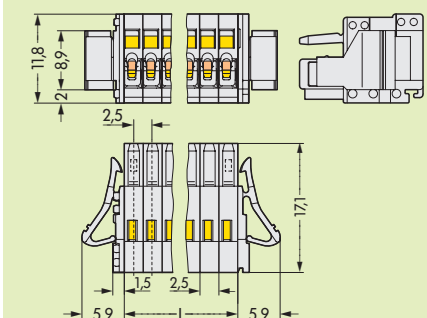

L = No. of poles x pin spacing

* Approvals with corresponding ratings see www.wago.com

MULTI CONNECTION SYSTEM ***MINI***
Headers with Solder Pins, Reflow Soldering
100 % Protected against Mismating, Pin Spacing 3.5 mm/0.138 in

Pin spacing 3.5 mm/0.138 in, black 250 V/2.5 kV/2 | 300 V, 10 A I_N 10 A *	Pin spacing 3.5 mm/0.138 in, black 250 V/2.5 kV/2 | 300 V, 10 A I_N 10 A *	





No. of poles	Item No.	No. of poles	Item No.	Width of reel (W)
Headers with solder pins,		**Headers with solder pins,**		
100 % protected against mismating, black,		**100 % protected against mismating,** black,		
straight solder pin 1 mm x 1 mm,		straight solder pin 1 mm x 1 mm,		
length of solder pin 2.4 mm/0.094 in		**length of solder pin 2.4 mm/0.094 in**		
		Headers in tape on reel acc. to IEC 60286-3		
		Reel diameter 330 mm/13 in		(mm)
2	**734-132/105-604**	2	**734-132/105-604/997-405**	32
3	**734-133/105-604**	3	**734-133/105-604/997-405**	32
4	**734-134/105-604**	4	**734-134/105-604/997-405**	32
5	**734-135/105-604**	5	**734-135/105-604/997-405**	32
6	**734-136/105-604**	6	**734-136/105-604/997-407**	56
8	**734-138/105-604**	8	**734-138/105-604/997-407**	56
10	**734-140/105-604**	10	**734-140/105-604/997-407**	56
12	**734-142/105-604**	12	**734-142/105-604/997-407**	56
			200 pieces per reel	

Accessories (fit after soldering)

	**Coding key,** light grey, snap-on type **734-130**		**Coding key,** light grey, snap-on type **734-130**

Dimensions **Diameter of the plated through hole: 1.4 $^{+0,1}$ mm – optimized for PCB thickness up to 2 mm**

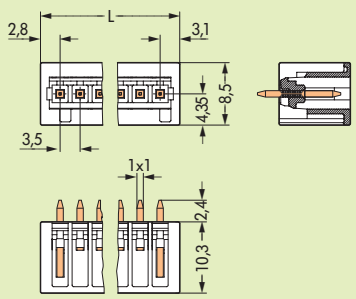

L = (No. of poles – 1) x pin spacing + 5.9 mm

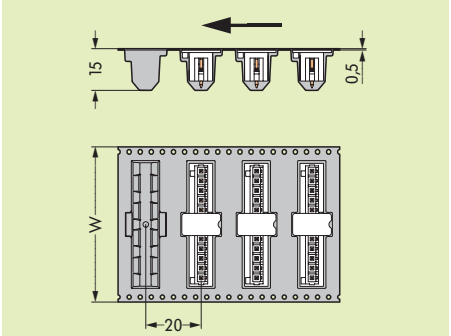



For use in reflow soldering processes in convection ovens based on EN 61 760-1

- apply solder paste
- place components on PCB
- begin reflow soldering process

Note: These connectors can only be mated and unmated at voltages below 42 V and in the "No load" condition.

For mating and unmating at low power values, please request data.

* Further approvals with corresponding ratings can be found at www.wago.com

Headers with Solder Pins, Reflow Soldering
100 % Protected against Mismating, Pin spacing 3.5 mm/0.138 in

Pin spacing 3.5 mm/0.138 in, black 250 V/2.5 kV/2 | 300 V, 10 A I_N 10 A *	Pin spacing 3.5 mm/0.138 in, black 250 V/2.5 kV/2 | 300 V, 10 A I_N 10 A *	

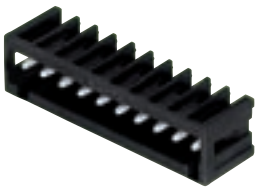



No. of poles	Item No.	No. of poles	Item No.	Width of reel (W)
Headers with solder pins,		**Headers with solder pins,**		
100 % protected against mismating, black,		**100 % protected against mismating,** black,		
right angle solder pin 1 mm x 1 mm,		right angle solder pin 1 mm x 1 mm,		
length of solder pin 2.4 mm/0.094 in		**length of solder pin 2.4 mm/0.094 in**		
		Headers in tape on reel acc. to IEC 60286-3		
		Reel diameter 330 mm/13 in		(mm)
		2	**734-162/105-604/997-405**	32
2	**734-162/105-604**	3	**734-163/105-604/997-405**	32
3	**734-163/105-604**	4	**734-164/105-604/997-405**	32
4	**734-164/105-604**	5	**734-165/105-604/997-405**	32
5	**734-165/105-604**	6	**734-166/105-604/997-407**	56
6	**734-166/105-604**	8	**734-168/105-604/997-407**	56
8	**734-168/105-604**	10	**734-170/105-604/997-407**	56
10	**734-170/105-604**	12	**734-172/105-604/997-407**	56
12	**734-172/105-604**			
		280 pieces per reel		

Accessories (fit after soldering)

	**Coding key,** light grey, snap-on type **734-130**		**Coding key,** light grey, snap-on type **734-130**



For use in reflow soldering processes in convection ovens based on EN 61 760-1

- apply solder paste
- place components on PCB
- begin reflow soldering process

Dimensions **Diameter of the plated through hole: 1.4 $^{+0,1}$ mm – optimized for PCB thickness up to 2 mm**

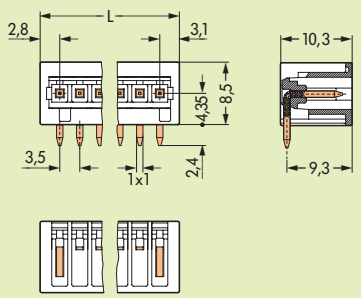

L = (No. of poles – 1) x pin spacing + 5.9 mm

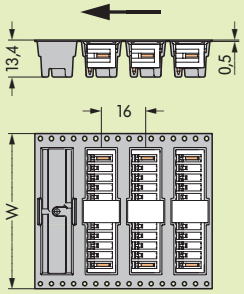

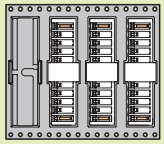

Position with even numbers of poles

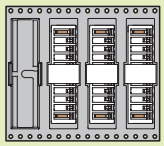

Position with odd numbers of poles

MULTI CONNECTION SYSTEM ***MIDI*** – Reflow Soldering
Headers with Solder Pins, Pin Spacing 5 mm/0.197 in

Pin spacing 5 mm/0.197 in, black 250 V/4 kV/3 | 300 V, 10 A I_N 12 A *	Pin spacing 5 mm/0.197 in, black 250 V/4 kV/3 | 300 V, 10 A I_N 12 A *	

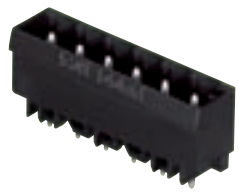



No. of poles	Item No.	No. of poles	Item No.	Width of reel (W)
Headers with solder pins, black, straight solder pin 1 mm x 1 mm, **length of solder pin 2.4 mm/0.094 in**		**Headers with solder pins,** black, straight solder pin 1 mm x 1 mm, **length of solder pin 2.4 mm/0.094 in**		
			Headers in tape on reel acc. to IEC 60286-3	
			Reel diameter 330 mm/13 in	(mm)
2	**231-132/001-000/105-604**	2	**231-132/001-000/105-604/997-405**	32
3	**231-133/001-000/105-604**	3	**231-133/001-000/105-604/997-405**	32
4	**231-134/001-000/105-604**	4	**231-134/001-000/105-604/997-407**	56
5	**231-135/001-000/105-604**	5	**231-135/001-000/105-604/997-407**	56
6	**231-136/001-000/105-604**	6	**231-136/001-000/105-604/997-407**	56
8	**231-138/001-000/105-604**	8	**231-138/001-000/105-604/997-407**	56
10	**231-140/001-000/105-604**	10	**231-140/001-000/105-604/997-409**	88
12	**231-142/001-000/105-604**	12	**231-142/001-000/105-604/997-409**	88
			170 pieces per reel	

Accessories (fit after soldering)

	**Coding key,** snap-on type, light grey **231-129**		**Coding key,** snap-on type, light grey **231-129**
	**Separator,** for formation of groups, light grey **231-500**		**Separator,** for formation of groups, light grey **231-500**

Dimensions **Diameter of the plated through hole: 1.4 $^{+0,1}$ mm – optimized for PCB thickness up to 2 mm**

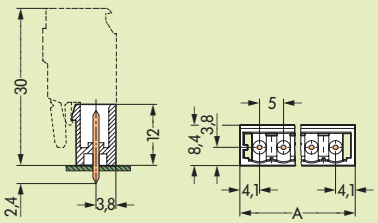

A = (No. of poles x pin spacing) + 3.2 mm

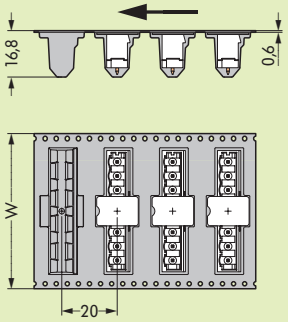



For use in reflow soldering processes in convection ovens based on EN 61 760-1

- apply solder paste
- place components on PCB
- begin reflow soldering process

Note: These connectors can only be mated and unmated at voltages below 42 V and in the "No load" condition.

For mating and unmating at low power values, please request data.

* Further approvals with corresponding ratings can be found at www.wago.com

Headers with Solder Pins, Pin Spacing 5 mm/0.197 in

Pin spacing 5 mm/0.197 in, black 250 V/4 kV/3 | 300 V, 10 A I_N 12 A *	Pin spacing 5 mm/0.197 in, black 250 V/4 kV/3 | 300 V, 10 A I_N 12 A *	

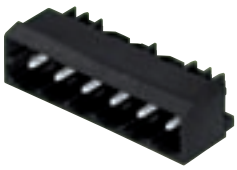



No. of poles	Item No.	No. of poles	Item No.	Width of reel (W)
Headers with solder pins, black, right angle solder pin 1 mm x 1 mm, **length of solder pin 2.4 mm/0.094 in**		**Headers with solder pins,** black, right angle solder pin 1 mm x 1 mm, **length of solder pin 2.4 mm/0.094 in**		
		Headers in tape on reel acc. to IEC 60286-3		
		Reel diameter 330 mm/13 in		(mm)
2	**231-432/001-000/105-604**	2	**231-432/001-000/105-604/997-405**	32
3	**231-433/001-000/105-604**	3	**231-433/001-000/105-604/997-405**	32
4	**231-434/001-000/105-604**	4	**231-434/001-000/105-604/997-407**	56
5	**231-435/001-000/105-604**	5	**231-435/001-000/105-604/997-407**	56
6	**231-436/001-000/105-604**	6	**231-436/001-000/105-604/997-407**	56
8	**231-438/001-000/105-604**	8	**231-438/001-000/105-604/997-407**	56
10	**231-440/001-000/105-604**	10	**231-440/001-000/105-604/997-409**	88
12	**231-442/001-000/105-604**	12	**231-442/001-000/105-604/997-409**	88
			330 pieces per reel	

Accessories (fit after soldering)

	**Coding key,** snap-on type, light grey **231-129**		**Coding key,** snap-on type, light grey **231-129**
	**Separator,** for formation of groups, light grey **231-500**		**Separator,** for formation of groups, light grey **231-500**



For use in reflow soldering processes in convection ovens based on EN 61 760-1

- apply solder paste
- place components on PCB
- begin reflow soldering process

Dimensions

Diameter of the plated through hole: 1.4 $^{+0,1}$ mm – optimized for PCB thickness up to 2 mm

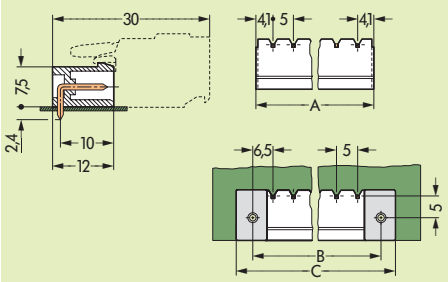

A = (No. of poles x pin spacing) + 3.2 mm
B = A + 4.8 mm; C = B + 7.2 mm

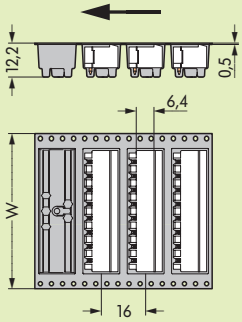

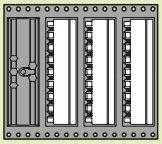

Position with even numbers of poles

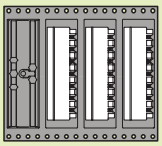

Position with odd numbers of poles

MULTI CONNECTION SYSTEM ***MINI*** **– Extension of Pole Number**
Connectors, 100 % Protected against Mismating
Pin Spacing 3.5 mm see also Full Line Catalog W4 Volume 2, pages 5.4 – 5.9





No. of poles	Item No.	No. of poles	Item No.	
Headers with solder pins, straight solder pin 1 mm x 1 mm		**Headers with solder pins,** right angle solder pin 1 mm x 1 mm		
14	**734-144**	14	**734-174**	

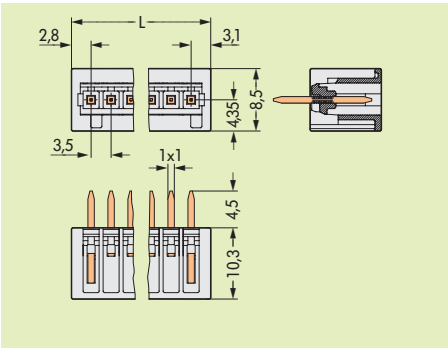

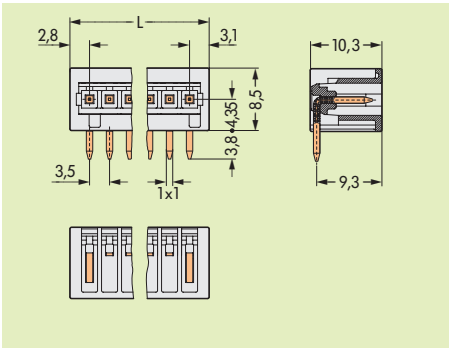







No. of poles	Item No.	No. of poles	Item No.	No. of poles	Item No.
Male connector with CAGE CLAMP® connection		**Femal connector with CAGE CLAMP® connection,** coding fingers		**Femal connector with CAGE CLAMP® connection and locking device,** coding fingers	
14	**734-314**	14	**734-114**	14	**734-114/037-000**

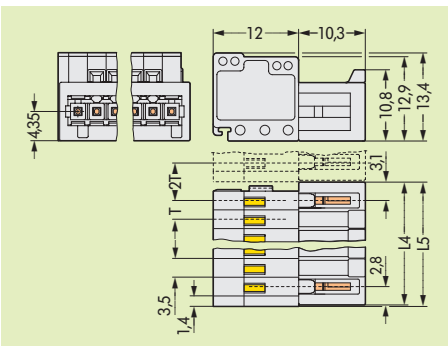

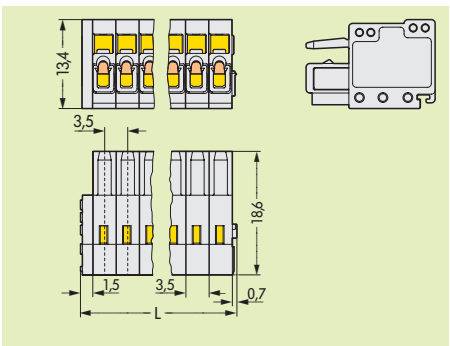

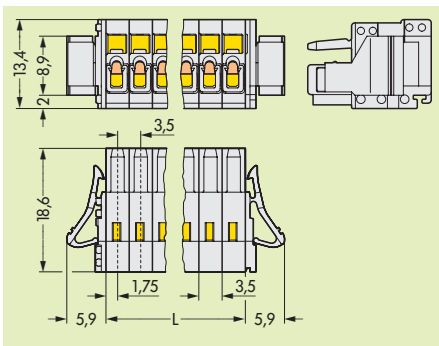

Combi Strip, 100 % Protected against Mismating, Pin Spacing 3.5 mm / 0.138 in

Pin spacing 3.5 mm/0.138 in, light grey **0.08 – 1.5 mm²** | **AWG 28 – 14**** **250 V/2.5 kV/2** | **300 V, 10 A** **I_N 10 A** **7 mm / 0.28 in** *	**Pin spacing 3.5 mm/0.138 in,** light grey **0.08 – 1.5 mm²** | **AWG 28 – 14**** **250 V/2.5 kV/2** | **300 V, 10 A** **I_N 10 A** **7 mm / 0.28 in** *





No. of poles	Item No.	No. of poles	Item No.
Combi strip with CAGE CLAMP® connection,		**Combi strip with CAGE CLAMP® connection and**	
100% protected against mismating,		**locking levers, 100 % protected against mismating,**	
pin and socket connection, with coding fingers, light grey		with coding fingers, light grey	
2	**734-362**	2	**734-362/037-000**
3	**734-363**	3	**734-363/037-000**
:	:	:	:
6	**734-366**	6	**734-366/037-000**
7	**734-367**	7	**734-367/037-000**
8	**734-368**	8	**734-368/037-000**
9	**734-369**	9	**734-369/037-000**
10	**734-370**	10	**734-370/037-000**
12	**734-372**	12	**734-372/037-000**



Combi strip

The combination of pin and socket connections allows the assembly of many combi strips.

2 CAGE CLAMP® connections allow the looping through of potentials .

Accessories

Marker cards,		**Marker cards,**	
	80 self-adhesive strips per card		80 self-adhesive strips per card
Marking		Marking	
1 – 16 (240x)	**210-332/0350-0202**	1 – 16 (240x)	**210-332/0350-0202**
17 – 32 (240x)	**210-332/0350-0204**	17 – 32 (240x)	**210-332/0350-0204**
For further printings see W4 Volume 2, Section 11		For further printings see W4 Volume 2, Section 11	
For direct printing please contact factory		For direct printing please contact factory	
	Screwdriver, (2.5 x 0.4) mm (0.098 x 0.016) in **210-619**		**Screwdriver,** (2.5 x 0.4) mm (0.098 x 0.016) in **210-619**
	Coding key, snap-on type, light grey **734-130**		**Coding key,** snap-on type, light grey **734-130**

Dimensions (in mm) L_4 = (No. of poles –1) x pin spacing + 5.9 mm + 0.45 mm

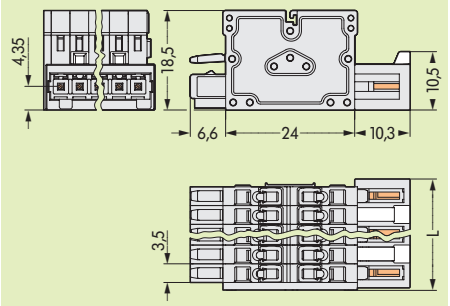

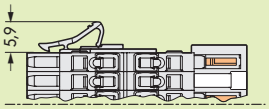

Other dimensions see drawings on the left

* Approvals with corresponding ratings see www.wago.com
** AWG 14: THHN, THWN

MULTI CONNECTION SYSTEM ***MINI***
IP 20 Protection using Cover for Male Connectors, Pin Spacings 3.5 mm/0.138 in / 3.81 mm/0.15 in

Pin spacings 3.5 mm/0.138 in / 3.81 mm/0.15 in, black		



No. of poles	Item No.
Cover for male connetors, Series 734	
IP 20 protection, black	
4	**734-420**



Insert the cover into the male connector to be protected

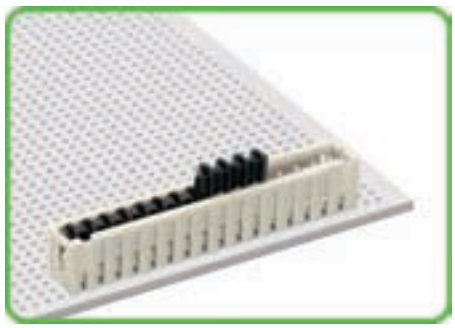

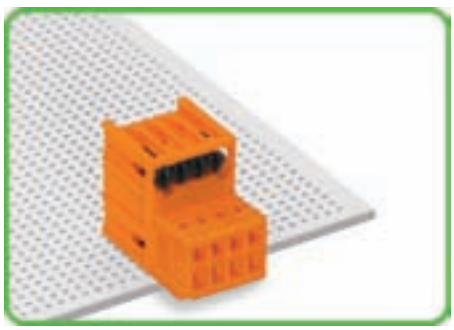

The cover is flush with the front edge of the male connector



Cut the cover to the required number of poles without singularization.

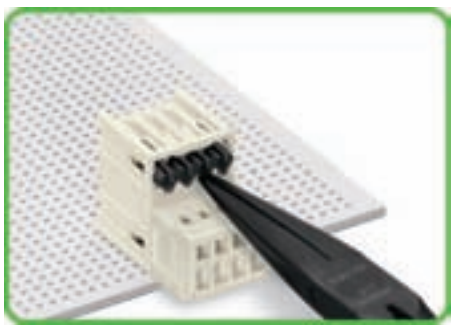

Pull out the cover using a suitable tool

Connection tool for pin spacings 3.5 mm/0.138 in and 3.81 mm/0.15 in	Connection tool for pin spacings 5 mm/0.197 in and 5.08 mm/0.2 in and 7.5 mm/0.295 in and 7.62 mm/0.3 in	





	Item No.		Item No.
Connection tool for male and female connectors with CAGE CLAMP® connection, Series 734		**Connection tool for male and female connectors with CAGE CLAMP® connection, Series 231, 232, 721, 722, 723, 731, 732**	
black	**734-231**	natural	**231-159**



Wire connection

Wire entry and operation of the clamp are parallel to each other



Wire connection

Wire entry and operation of the clamp are parallel to each other



Wire connection

Wire entry and operation of the clamp is done at a right angle to each other

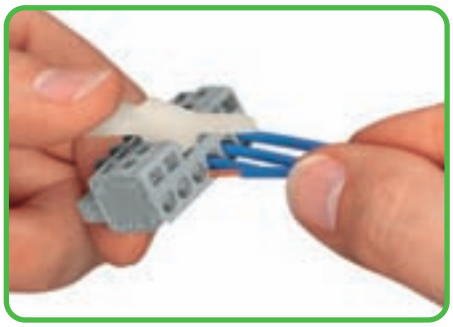

Wire connection

Wire entry and operation of the clamp is done at a right angle to each other

MULTI CONNECTION SYSTEM ***MINI***
Female Connectors with Solder Pins, 100 % Protected against Mismating
Pin Spacing 3.5 mm/0.138 in

Pin spacing 3.5 mm/0.138 in, light grey **250 V/2.5 kV/2** | **300 V, 10 A** **I_N 10 A** *	**Pin spacing 3.5 mm/0.138 in,** light grey **250 V/2.5 kV/2** | **300 V, 10 A** **I_N 10 A** *	**Female connectors with solder pins and locking device** *







No. of poles	Item No.	No. of poles	Item No.	Additional item No. for . . .
Female connectors with straight solder pins,		**Female connectors with right angle solder pins,**		. . . Female connectors with straight or right angle
100 % protected against mismating,		**100 % protected against mismating,**		solder pins and **locking device**
with coding fingers, with two latches, light grey,		with coding fingers, with two latches, light grey,		
solder pin 0.9 mm x 0.9 mm		solder pin 0.9 mm x 0.9 mm		
2 (one latch only)	**734-462**	2 (one latch only)	**734-532**	**. . ./037-000**
3	**734-463**	3	**734-533**	
:	:	:	:	
6	**734-466**	6	**734-536**	
:	:	:	:	Ordering example:
10	**734-470**	10	**734-540**	Female connector with straight solder pins
12	**734-472**	12	**734-542**	and locking device,
:	:	:	:	100 % protected against mismating,
14	**734-474**	14	**734-544**	pin spacing 3.5 mm/0.138 in, light grey,
16	**734-476**	16	**734-546**	12-pole **734-472/037-000**
18	**734-478**	18	**734-548**	
20	**734-480**	20	**734-550**	
24	**734-484**	24	**734-554**	

Accessories

Marker cards,		**Marker cards,**		**Marker cards,**	
	80 self-adhesive strips per card		80 self-adhesive strips per card		80 self-adhesive strips per card
Marking		Marking		Marking	
1 – 16 (240 x)	**210-332/0350-0202**	1 – 16 (240 x)	**210-332/0350-0202**	1 – 16 (240 x)	**210-332/0350-0202**
17 – 32 (240 x)	**210-332/0350-0204**	17 – 32 (240 x)	**210-332/0350-0204**	17 – 32 (240 x)	**210-332/0350-0204**
other markings		other markings		other markings	
see Full Line Catalog W4 Volume 2, Section 11		see Full Line Catalog W4 Volume 2, Section 11		see Full Line Catalog W4 Volume 2, Section 11	
For direct printing, please contact factory		For direct printing, please contact factory		For direct printing, please contact factory	

Dimensions (in mm) **Diameter of drilled hole: $1.4^{+0.1}$ mm**

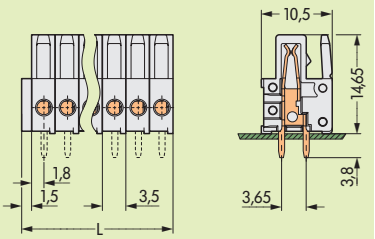

L = No. of poles – 1 x pin spacing + 1.5 mm

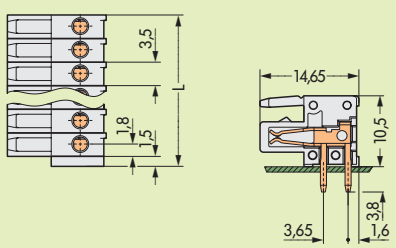

L = No. of poles – 1 x pin spacing + 1.5 mm

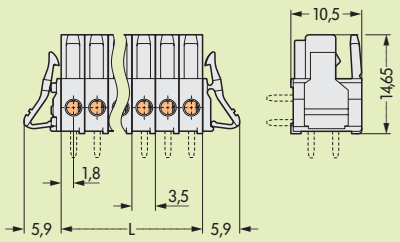

L = No. of poles – 1 x pin spacing

* Approvals with corresponding ratings see www.wago.com

Female Connectors with Solder Pins, 100 % Protected against Mismating
Pin Spacing 3.81 mm/0.15 in

Pin spacing 3.81 mm/0.15 in, orange **250 V/2.5 kV/2 | 300 V, 10 A** **I_N 10 A** *	**Pin spacing 3.81 mm/0.15 in, orange** **250 V/2.5 kV/2 | 300 V, 10 A** **I_N 10 A** *	**Female connectors with solder pins and locking device** *







No. of poles	Item No.	No. of poles	Item No.	Additional item No. for . . .
Female connectors with straight solder pins,		**Female connectors with right angle solder pins,**		. . . Female connectors with straight or right angle
100 % protected against mismating,		**100 % protected against mismating,**		solder pins and **locking device**
with coding fingers, with two latches, light grey,		with coding fingers, with two latches, light grey,		
solder pin 0.9 mm x 0.9 mm		solder pin 0.9 mm x 0.9 mm		
2 (one latch only)	**734-502**	2 (one latch only)	**734-562**	**. . ./037-000**
3	**734-503**	3	**734-563**	
4	**734-504**	4	**734-564**	
5	**734-505**	5	**734-565**	
6	**734-506**	6	**734-566**	Ordering example:
7	**734-507**	7	**734-567**	Female connector with straight solder pins
8	**734-508**	8	**734-568**	and locking device,
9	**734-509**	9	**734-569**	100 % protected against mismating,
10	**734-510**	10	**734-570**	pin spacing 3.81 mm/0.15 in, light grey,
12	**734-512**	12	**734-572**	8-pole **734-568/037-000**
14	**734-514**	14	**734-574**	
16	**734-516**	16	**734-576**	
20	**734-520**	20	**734-580**	

Accessories

Marker cards,		**Marker cards,**		**Marker cards,**	
	80 self-adhesive strips per card		80 self-adhesive strips per card		80 self-adhesive strips per card
Marking		Marking		Marking	
1 – 16 (240 x)	**210-332/0381-0202**	1 – 16 (240 x)	**210-332/0381-0202**	1 – 16 (240 x)	**210-332/0381-0202**
17 – 32 (240 x)	**210-332/0381-0204**	17 – 32 (240 x)	**210-332/0381-0204**	17 – 32 (240 x)	**210-332/0381-0204**
other markings		other markings		other markings	
see Full Line Catalog W4 Volume 2, Section 11		see Full Line Catalog W4 Volume 2, Section 11		see Full Line Catalog W4 Volume 2, Section 11	
For direct printing, please contact factory		For direct printing, please contact factory		For direct printing, please contact factory	

Dimensions (in mm) **Diameter of drilled hole: 1.4 $^{+0.1}$ mm**

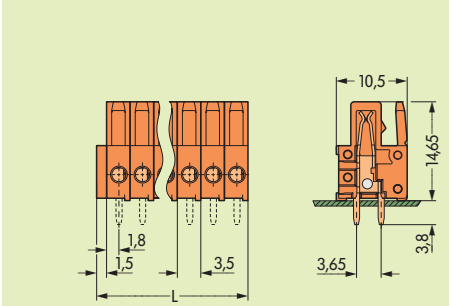

L = No. of poles – 1 x pin spacing + 1.5 mm

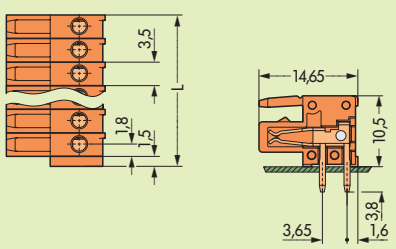

L = No. of poles – 1 x pin spacing + 1.5 mm

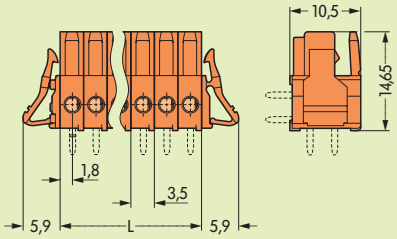

L = No. of poles – 1 x pin spacing

MULTI CONNECTION SYSTEM ***MIDI***
Angled Female Connectors, 100 % Protected against Mismating, CAGE CLAMP®
Pin Spacing 5 mm/0.197 in

Pin spacing 5 mm/0.197 in, light grey **0.08 – 2.5 mm²** | **AWG 28 – 12**** **250 V/4 kV/3** | **300 V, 15 A** **I_N 14 A** | **300 V, 15 A** **8 – 9 mm / 0.33 in** *	**Pin spacing 5 mm/0.197 in,** light grey **0.08 – 2.5 mm²** | **AWG 28 – 12**** **250 V/4 kV/3** | **300 V, 15 A** **I_N 14 A** | **300 V, 15 A** **8 – 9 mm / 0.33 in** *





No. of poles	Item No.	No. of poles	Item No.
Angled female connectors with CAGE CLAMP® connection, 100 % protected against mismatching, conductor exit **same direction** as latches, with coding fingers, with 2 latches, light grey		**Angled female connectors with CAGE CLAMP® connection, 100 % protected against mismatching,** conductor exit **same direction** as latches, with coding fingers, with 2 latches, light grey	
2 (one latch only)	**722-202/026-000**	2 (one latch only)	**722-102/026-000**
3	**722-203/026-000**	3	**722-103/026-000**
4	**722-204/026-000**	4	**722-104/026-000**
5	**722-205/026-000**	5	**722-105/026-000**
6	**722-206/026-000**	6	**722-106/026-000**
:	:	:	:
10	**722-210/026-000**	10	**722-110/026-000**
12	**722-212/026-000**	12	**722-112/026-000**
14	**722-214/026-000**	14	**722-114/026-000**
16	**722-216/026-000**	16	**722-116/026-000**
20	**722-220/026-000**	20	**722-120/026-000**

Accessories

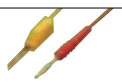	**Test plug,** w. cable 500 mm/1'7.7" Ø 2 mm/0.079 in, red **210-136** Ø 2.3 mm/0.091 in, yel. **210-137**	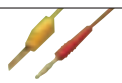	**Test plug,** w. cable 500 mm/1'7.7" Ø 2 mm/0.079 in, red **210-136** Ø 2.3 mm/0.091 in, yel. **210-137**
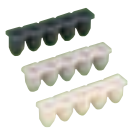	**Insulation stop,** 5 pcs/strip 0.08 - 0.2 mm² ❷ (white) **231-670** 0.25 - 0.5 mm² (light gr.) **231-671** 0.75 - 1 mm² (dark grey) **231-672** ❷ 0.2 mm² solid / 0.14 mm² f-st	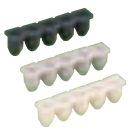	**Insulation stop,** 5 pcs/strip 0.08 - 0.2 mm² ❷ (white) **231-670** 0.25 - 0.5 mm² (light gr.) **231-671** 0.75 - 1 mm² (dark grey) **231-672** ❷ 0.2 mm² solid / 0.14 mm² f-st

Dimensions (in mm)

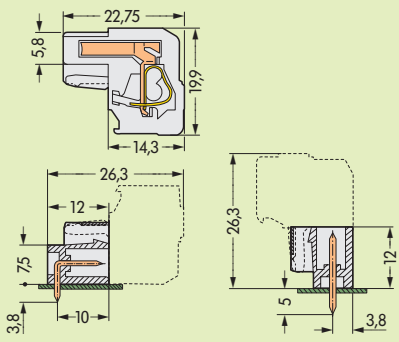

L = (No. of poles x pin spacing) + 1.5 mm + 0.9 mm

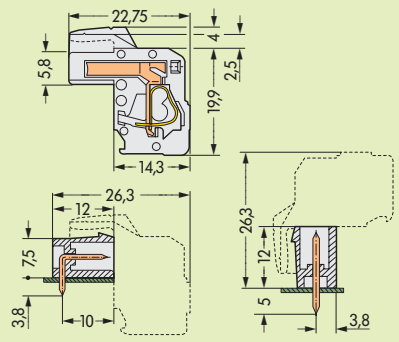

L = (No. of poles x pin spacing) + 1.5 mm + 0.9 mm

* Approvals with corresponding ratings see www.wago.com
** AWG 12: THHN, THWN

MULTI CONNECTION SYSTEM ***MIDI*** **– Extension of Pole Number**
Connectors with Right Angle Solder Pins
Pin Spacing 5 mm/0.197 in see also Full Line Catalog W4 Volume 2, page 7.15

Pin spacing 5 mm/0.197 in, light grey
250 V/4 kV/3 | 300 V, 10 A ❶
I_N 12 A ❶/ I_N 16 A ❷ | 300 V, 15 A ❷

* CCA GL LR ABS

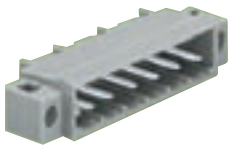

No. of poles	Item No.	Item No.
Headers with right angle solder pins and fixing flanges, grey,		
solder pin	1 mm x 1 mm ❶	1.2 mm x 1.2 mm ❷
3	**231-433/040-000**	**231-463/040-000**

Female connectors with locking devices cannot be used.



Coding key, snap-on type, light grey **231-129**



Separator, for formation of groups, light grey **231-500**



Additional mechanical safety

The additional mechanical securing on the PCB or the fixing on panels/front plates in case of feedthrough applications are the main features of these headers.

Depending on the wall thickness a recessed, flush or projecting mounting can be realized.

Fixing of the header may be made with standard nuts and bolts (size M 2 or M 2.5).

Note: These connectors can only be mated and unmated at voltages below 42 V and in the "No load" condition.

For mating and unmating at low power values, please request data.

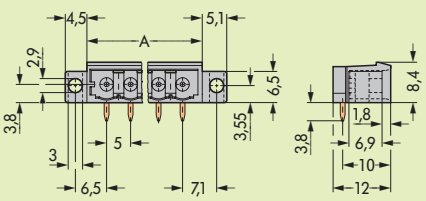

A = (No. of poles x pin spacing) + 3.2 mm

MULTI CONNECTION SYSTEM ***MIDI***
Comb type jumper bars
Pin Spacings 5 mm / 0.197 in and 5.08 / 0.2 in

Pin spacings 5 mm/0.197 in, grey
5.08 mm/0.2 in, grey



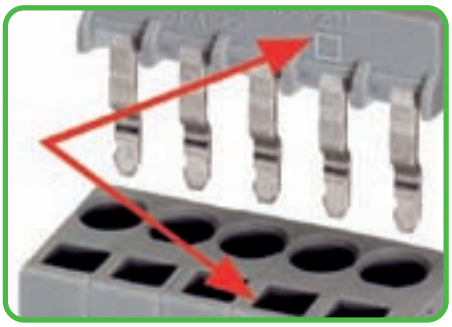



Attention! Insert jumper bar according to direction symbols.
☐ Symbol shows direction to operating slot
○ Symbol shows direction to conductor entry

	Item No.	Pack.-unit pcs
Comb type jumper bars, insulated		
for straight and angled male and female connectors		
of Series 231		
with CAGE CLAMP® connection		
Suitable for pin spacings 5 mm/0.197 in and		
5.08 mm/0.2 in		
Attention!		
Not suitable for 2-conductor female connectors with		
CAGE CLAMP®S connection		
3-way	**231-903**	
5-way	**231-905**	
7-way	**231-907**	
10-way	**231-910**	



Insert comb type jumper bars with maximum 5 contacts using operating tool. Comb type jumper bars with more than 7 contacts are pre-assembled by WAGO



Individual comb type jumper bars are created by breaking out jumper contacts

Accessories

Operating tool, insulated,



3-way	**280-433**	1
5-way	**280-435**	1



Note: The maximum wire size is reduced to 1.5 mm²/ AWG 16 solid and stranded ("s" + "f-st")

MULTI CONNECTION SYSTEM ***MIDI*** **– Extension of Pole Number**
Connectors with Screw/Threaded flanges
Pin Spacing 5.08 mm / 0.2 in see also Full Line Catalog W4 Volume 2, pages 7.32 – 7.33

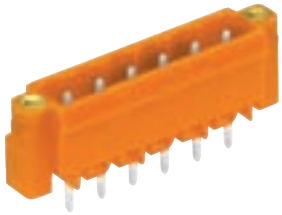

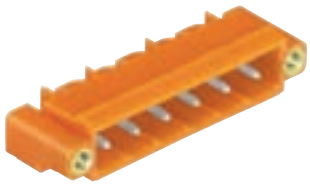

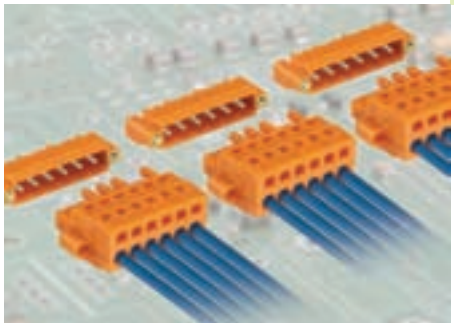

No. of poles	Item No.	No. of poles	Item No.	
Headers with straight solder pins and threaded flanges, orange, solder pin 1 mm x 1 mm		**Headers with right angle solder pins and threaded flanges,** orange, solder pin 1 mm x 1 mm		
7	**231-337/108-000**	7	**231-537/108-000**	
:	:	:	:	
10	**231-340/108-000**	10	**231-540/108-000**	
12	**231-342/108-000**	12	**231-542/108-000**	
14	**231-344/108-000**	14	**231-544/108-000**	
:	:	:	:	
16	**231-346/108-000**	16	**231-546/108-000**	

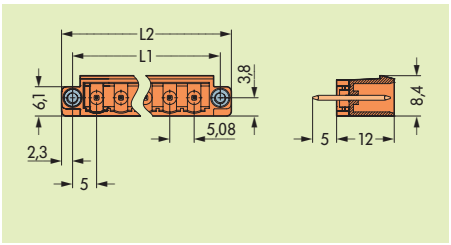

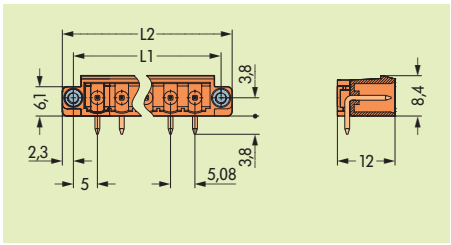

Pin spacing 5.08 mm/0.2 in, orange

0.2 – 2.5 mm² | **AWG 24 – 12**

250 V/4 kV/3 | **300 V, 20/5 A**

I_N 16 A

9 – 10 mm / 0.37 in





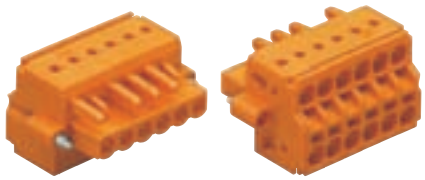

No. of poles	Item No.	No. of poles	Item No.	No. of poles	Item No.
Male connectors with CAGE CLAMP® and threaded flanges, orange		**Female connectors with CAGE CLAMP® and screw flanges,** with coding fingers, with two latches, orange		**2-conductor female connectors with CAGE CLAMP® and screw flanges,** with coding fingers, with two latches, orange	
7	**231-637/109-000**	7	**231-307/107-000**	2 (only 1 latch)	**231-2302/107-000**
:	:	:	:	3 (only 1 latch)	**231-2303/107-000**
10	**231-640/109-000**	10	**231-310/107-000**	4	**231-2304/107-000**
12	**231-642/109-000**	12	**231-312/107-000**	:	:
14	**231-644/109-000**	14	**231-314/107-000**	10	**231-2310/107-000**
:	:	:	:	:	:
16	**231-646/109-000**	16	**231-316/107-000**	16	**231-2316/107-000**

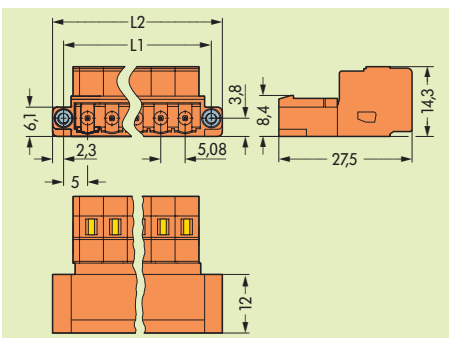

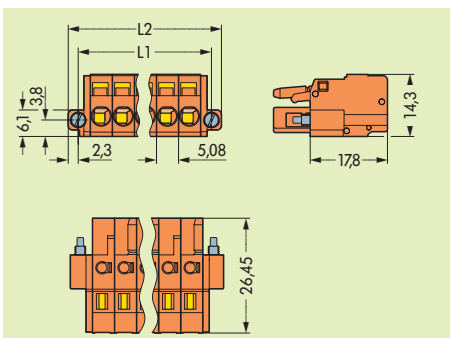

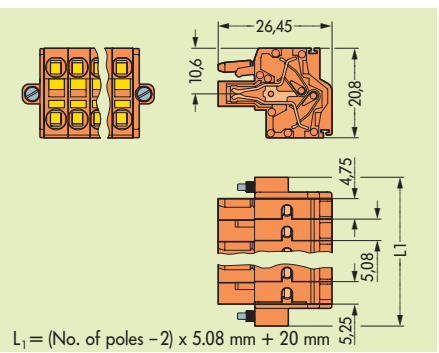

L_1 = (No. of poles – 2) x 5.08 mm + 20 mm

MULTI CONNECTION SYSTEM ***MIDI***
Strain relief plates for 2-Conductor Female Connectors
Pin Spacings 5 mm/0.197 in; 5.08 mm/0.2 in; 7.5 mm/0.295 in and 7.62 mm/0.3 in

CAGE CLAMP®S

Ordering examples for
for 2-conductor female connectors
with CAGE CLAMP®S connection
and **strain relief plates**

Description	Width	Additional item No.
Strain relief plate, fied	6 mm	**.../132-000**
	12.5 mm	**.../133-000**
	25 mm	**.../134-000**
	35 mm	**.../135-000**
	55 mm	**.../136-000**
	75 mm	**.../137-000**

2-conductor female connectors with CAGE CLAMP®S connection can be fitted with a strain relief plate retrospectively or directly at the factory. Plates are available in 6 different sizes.

An "additional item no.", referring to the width of the strain relief plate, is added to the "basic item no." and determines the type of connector (see ordering examples).

The arrangement of the fixing holes for cable ties allow single conductors or multicore cables to be attached in several different orientations.

Application notes

Strain relief plate			... female conn. ranges as stated below		Cable ties*		
Item No.	Color	Width	Pin spacings 5 mm/5.08 mm	Pin spacings 7.50 mm/7.62 mm	Width	Type	MIL
734-127 **734-327** **734-227**	light grey grey orange	6 mm	2 poles		2.5 mm	T 18 R	MS 3367
734-128 **734-328** **734-228**	light grey grey orange	12.5 mm	3 – 4 poles	2 – 3 poles	2.5 mm	T 18 R	
734-129 **734-329** **734-229**	light grey grey orange	25 mm	5 – 7 poles	4 – 6 poles	2.5 mm 3.6 mm	T 18 R T 30 R	
734-126 **734-326** **734-226**	light grey grey orange	35 mm	8 – 11 poles	7 – 9 poles	2.5 mm 3.6 mm	T 18 R T 30 R	
734-426 **734-430** **734-428**	light grey grey orange	❶ 55 mm	12 – 16 poles	10 – 12 poles	2.5 mm 3.6 mm 4.0 mm 4.7 mm	T 18 R T 30 R T 40 R T 50 R	
734-427 **734-431** **734-429**	light grey grey orange	❷ 75 mm	17 – 24 poles	13 – 16 poles	2.5 mm 3.6 mm 4.0 mm 4.7 mm	T 18 R T 30 R T 40 R T 50 R	

* Cable binding tool MK III

Item No.



Female connector, pin spacing 5 mm/0.197 in, grey
8 poles, with strain relief plate
231-2108/026-000/135-000

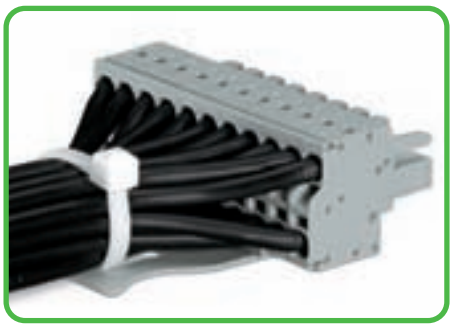

Female connector, pin spacing 5 mm/0.197 in, grey
11 poles, with strain relief plate
231-2111/026-000/135-000

Dimensions (in mm)

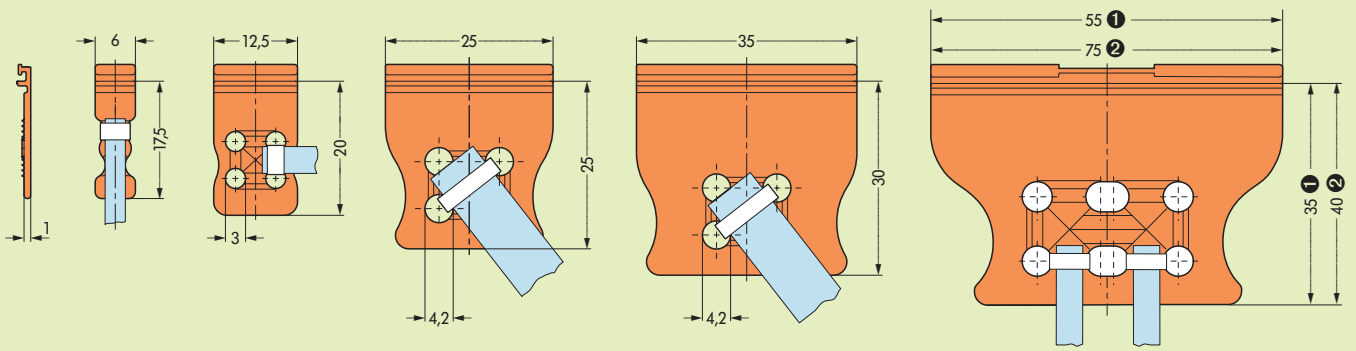

* Recommended cable ties and cable binding tool from Tyton or Hellermann, not offered by WAGO

MULTI CONNECTION SYSTEM ***MAXI***
Headers with Solder Pins, 100 % Protected against Mismating, Pin Spacing 7.62 mm / 0.3 in

Pin spacing 7.62 mm/0.3 in, light grey **500 V/6 kV/3 | 300/600 V, 42/5 A** **I_N 41 A | 300/600 V, 50/5 A** *	**Pin spacing 7.62 mm/0.3 in, light grey** **500 V/6 kV/3 | 300/600 V, 42/5 A** **I_N 41 A | 300/600 V, 50/5 A** *





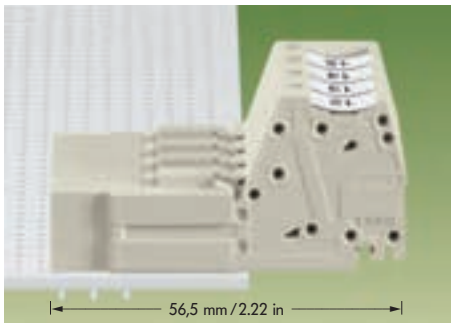

No. of poles	Item No.	No. of poles	Item No.
Headers with straight solder pins,		**Headers with right angle solder pins,**	
100 % protected against mismating,		**100 % protected against mismating,**	
light grey,		light grey,	
3 x solder pins	1 mm x 1.2 mm	3 x solder pins	1 mm x 1.2 mm
2	**831-3602**	2	**831-3622**
3	**831-3603**	3	**831-3623**
4	**831-3604**	4	**831-3624**
5	**831-3605**	5	**831-3625**
6	**831-3606**	6	**831-3626**
7	**831-3607**	7	**831-3627**
8	**831-3608**	8	**831-3628**

Note:
On request, headers with straight solder pins are also available with protection against positioning error on the PCB

Dimensions (in mm) **Diameter of drilled hole: 1.7 $^{+0.1}$ mm L = (No. of poles - 1) x pin spacing + 10.5 mm**



Break or cut-off coding pin on the female connector . . .

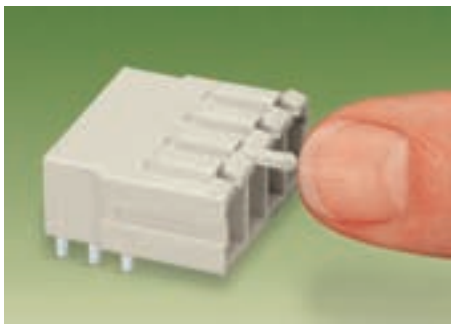

. . . Fit the coding pin into the connector (break first) so that the pin engages



Printed female connector on request

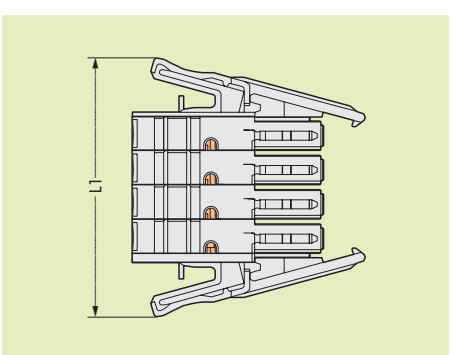

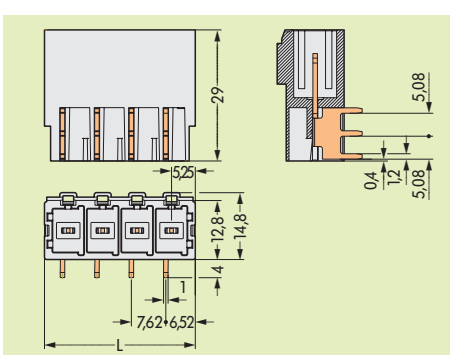

* Further approvals with corresponding ratings can be found at www.wago.com

MULTI CONNECTION SYSTEM ***MAXI***
Male Connectors, 100 % Protected against Mismating, Pin Spacing 7.62 mm / 0.3 in

CAGE CLAMP®S

Pin spacing 7.62 mm/0.3 in, light grey **0.5 – 6 (10) mm² ❶** | **AWG 20 – 8** **800 V/8 kV/3** | **300/600 V, 42/5 A** **I_N 41 A** | **300/600 V, 50/5 A** *	**Pin spacing 7.62 mm/0.3 in,** light grey **0.5 – 6 (10) mm² ❶** | **AWG 20 – 8** **800 V/8 kV/3** | **300/600 V, 42/5 A** **I_N 41 A** | **300/600 V, 50/5 A** *



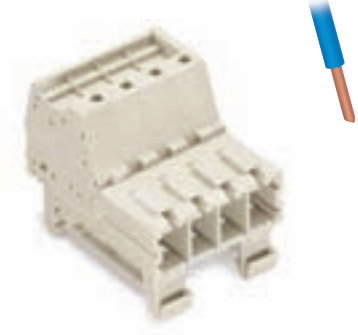

❶ can be connected:
0.5 mm² – 10 mm² "s + f-st";
can be pushed in directly: 1.5 mm² – 10 mm² "s" and
1.5 mm² – 6 mm² "insulated ferrule, 12 mm / 0.472 in"

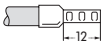

No. of poles	Item No.	No. of poles	Item No.
Male connectors with CAGE CLAMP®S connection, 100 % protected against mismating, with coding fingers, light grey		**Male connectors with CAGE CLAMP®S connection, for DIN 35 rail mounting** **100 % protected against mismating,** with coding fingers, light grey	
2	**831-3202**	2	**831-3202/007-000**
3	**831-3203**	3	**831-3203/007-000**
4	**831-3204**	4	**831-3204/007-000**
5	**831-3205**	5	**831-3205/007-000**
6	**831-3206**	6	**831-3206/007-000**
7	**831-3207**	7	**831-3207/007-000**
8	**831-3208**	8	**831-3208/007-000**

Accessories

Test plug, with cable 500 mm / 1'7.7"		**Test plug,** with cable 500 mm / 1'7.7"	
	Ø 2 mm/0.079 in, red **210-136**		Ø 2 mm/0.079 in, red **210-136**
Marker card,	80 self-adhesive strips per card Height of marker strip 5 mm / 0.197 in Marking	**Marker card,**	80 self-adhesive strips per card Height of marker strip 5 mm / 0.197 in Marking
	1 – 16 (100 x) **210-334/0762-0202** For direct printing, please contact factory		1 – 16 (100 x) **210-334/0762-0202** For direct printing, please contact factory
Marker strip, white, plain, on roll	for center marking 11 mm / 0.039 in wide 50 m **2009-110** 300 m **2009-130**	**Marker strip,** white, plain, on roll	for center marking 11 mm / 0.039 in wide 50 m **2009-110** 300 m **2009-130**
DIN 35 carrier rail adapter, for snap-fit mounting	to male connectors with CAGE CLAMP®S connection **831-137**	**Screwdriver with partially insulated shaft,**	(5.5 x 0.8) mm / (0.217 x 0.031) in **210-621**

Dimensions (in mm) **L = (No. of poles - 1) x pin spacing + 9.5 mm**

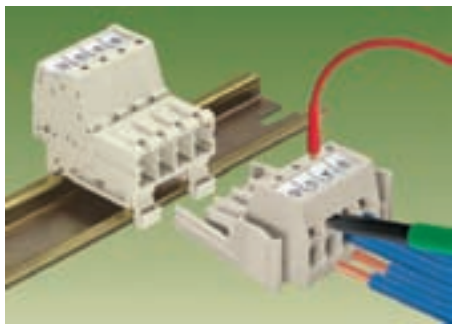

The new WAGO MULTI CONNECTION SYSTEM MAXI can be used as "high-power" sub-assemblies on carrier rails or printed circuit boards in such applications like drive technology, converters or power supply units.

Equipped with CAGE CLAMP® S connection up to AWG 10/ AWG 8 (6 mm²/10 mm²) ❶, it handles a rated current of 41 A and has a pin spacing of 7.62 mm / 0.3 in, which makes it ideally suited for such applications.

Product features

- 100 % protected against mismating
- Coding without the loss of poles
- Male and female connectors with CAGE CLAMP®S connection for all conductor types Additional benefit: Time-saving push-in wiring of fine-stranded wires with ferrules
- Vibration proof - fast - maintenance free
- Male and female connectors with separate test slot for test plugs Ø 2.3 mm / 0.091 in
- Pole marking using marker strips or direct printing

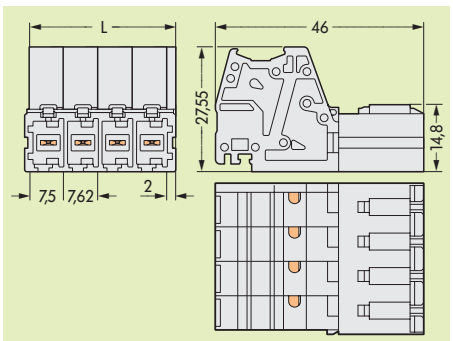

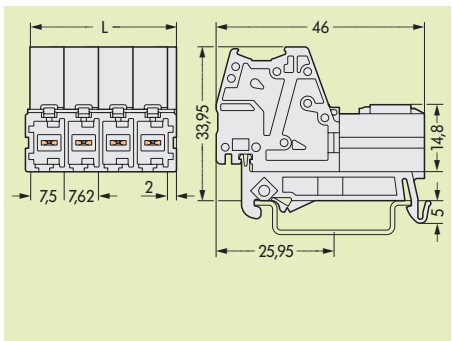

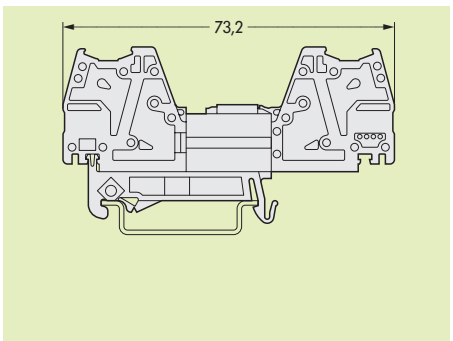

* Further approvals with corresponding ratings can be found at www.wago.com

MULTI CONNECTION SYSTEM ***MAXI***
Female Connectors, 100 % Protected against Mismating, Pin Spacing 7.62 mm / 0.3 in

CAGE CLAMP®S

Pin spacing 7.62 mm/0.3 in, light grey **0.5 – 6 (10) mm² ❶** | **AWG 20 – 8** **800 V/8 kV/3** | **300/600 V, 42/5 A** **I_N 41 A** | **300/600 V, 50/5 A** *	**Pin spacing 7.62 mm/0.3 in,** light grey **0.5 – 6 (10) mm² ❶** | **AWG 20 – 8** **800 V/8 kV/3** | **300/600 V, 42/5 A** **I_N 41 A** | **300/600 V, 50/5 A** *	



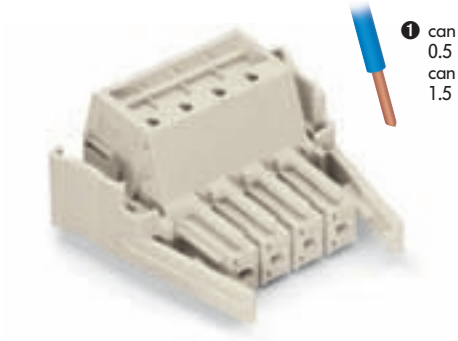

❶ can be connected:
0.5 mm² – 10 mm² "s + f-st";
can be pushed in directly: 1.5 mm² – 10 mm² "s" and
1.5 mm² – 6 mm² "insulated ferrule, 12 mm / 0.472 in"

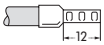

No. of poles	Item No.	No. of poles	Item No.
Female connectors with CAGE CLAMP®S connection, 100 % protected against mismating, with coding fingers, light grey		**Female connectors with CAGE CLAMP®S connection and locking device, 100 % protected against mismating,** with coding fingers, light grey	
2	**831-3102**	2	**831-3102/037-000**
3	**831-3103**	3	**831-3103/037-000**
4	**831-3104**	4	**831-3104/037-000**
5	**831-3105**	5	**831-3105/037-000**
6	**831-3106**	6	**831-3106/037-000**
7	**831-3107**	7	**831-3107/037-000**
8	**831-3108**	8	**831-3108/037-000**

Accessories

Test plug, with cable 500 mm / 1'7.7"		**Test plug,** with cable 500 mm / 1'7.7"	
	2 mm/0.079 in Ø, red **210-136**		2 mm/0.079 in Ø, red **210-136**
Marker card,		**Marker card,**	
	80 self-adhesive strips per card Height of marker strip 5 mm/0197 in Marking 1 – 16 (100 x) **210-334/0762-0202** For direct printing, please contact factory		80 self-adhesive strips per card Height of marker strip 5 mm/0197 in Marking 1 – 16 (100 x) **210-334/0762-0202** For direct printing, please contact factory
Marker strip, white, plain, on roll		**Marker strip,** white, plain, on roll	
	for center marking 11 mm / 0.039 in wide 50 m **2009-110** 300 m **2009-130**	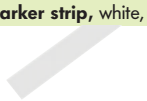	for center marking 11 mm / 0.039 in wide 50 m **2009-110** 300 m **2009-130**
Screwdriver with partially insulated shaft,		**Screwdriver with partially insulated shaft,**	
	(5.5 x 0.8) mm / (0.217 x 0.031) in **210-621**		(5.5 x 0.8) mm / (0.217 x 0.031) in **210-621**

Dimensions (in mm) **L = (No. of poles - 1) x pin spacing + 9.5 mm** **L1 = L + 24.8 mm**

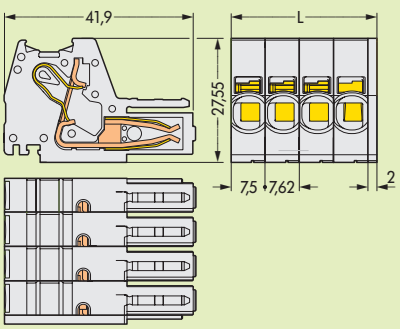

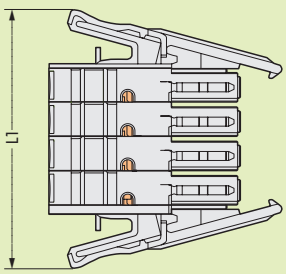

Operating Tools and Ex e/Ex i Separator Plate

Screwdriver acc. to DIN 5264, for optimum handling in terminal blocks and connectors	TOPJOB® S tool	Ex e/Ex i suitable separator plate 120 mm /4.724 in width







Item No.	Pack.-unit pcs
Short screwdriver, with partially insulated shaft, blade 3.5 x 0.5 mm / 0.137 in x 0.020 in, suitable for series 260, 261, 262, 264, 280, 281, 869	
210-657	1
Short angled screwdriver, with partially insulated shaft, blade 3.5 x 0.5 mm / 0.137 in x 0.020 in, particularly suitable for actuator and sensor terminal blocks of Series 280 and also for Series 260, 261, 262, 264, 280, 281, 869, 870, 880	
210-658	1

Item No.	Pack.-unit pcs
TOPJOB® S tool with partially insulated shaft, Special blades 3.5 mm / 0.137 in and 5.5 mm / 0.217 in suitable for 2003 and 2005 Series multilevel installation terminal blocks	
2009-310	1

Ex e/Ex i seperator plate, 3 mm/0.118 in thick, suitable for rail mounted terminal blocks especially for double deck terminal blocks	
209-192	1

Application notes



The blade dimensions of the a. m. screwdrivers (DIN 5264) are particularly appropriate for easy operation of front-entry sensor and actuator terminal blocks of series 280.



According to EN 50020, a minimum distance of 50 mm must be kept between Ex e and Ex i circuit connecting parts.
The use of seperators is a space-saving solution when Ex e and Ex i terminal blocks are mounted on a common carrier rail.

Separator Plates, Oversized

Separator plates, oversized suitable for terminal block of series 2002	Separator plates, oversized suitable for terminal block of series 2004	Separator plates, oversized suitable for terminal block of series 2006







	Item No.	Pack.-unit pcs
Separator plate, oversized, 0.8 mm/ 0.031 in thick		
suitable for 2-conductor terminal blocks		
orange	**2002-1294**	1
grey	**2002-1293**	1

	Item No.	Pack.-unit pcs
Separator plate, oversized, 0.8 mm/ 0.031 in thick		
suitable for 2-conductor terminal blocks		
orange	**2004-1294**	1
grey	**2004-1293**	1

	Item No.	Pack.-unit pcs
Separator plate, oversized, 0.8 mm/ 0.031 in thick		
suitable for 2-conductor terminal blocks		
orange	**2006-1294**	1
grey	**2006-1293**	1







	Item No.	Pack.-unit pcs
Separator plate, oversized, 0.8 mm/ 0.031 in thick		
suitable for 3-conductor terminal blocks		
orange	**2002-1394**	1
grey	**2002-1393**	1

	Item No.	Pack.-unit pcs
Separator plate, oversized, 0.8 mm/ 0.031 in thick		
suitable for 3-conductor terminal blocks		
orange	**2004-1394**	1
grey	**2004-1393**	1

	Item No.	Pack.-unit pcs
Separator plate, oversized, 0.8 mm/ 0.031 in thick		
suitable for 3-conductor terminal blocks		
orange	**2006-1394**	1
grey	**2006-1393**	1





	Item No.	Pack.-unit pcs
Separator plate, oversized, 0.8 mm/ 0.031 in thick		
suitable for 4-conductor terminal blocks		
orange	**2002-1494**	1
grey	**2002-1493**	1

	Item No.	Pack.-unit pcs
Separator plate, oversized, 0.8 mm/ 0.031 in thick		
suitable for 4-conductor terminal blocks		
orange	**2004-1494**	1
grey	**2004-1493**	1

Contents
WINSTA®



***WINSTA*® Mini**
Sockets and plugs
2 poles **Series 890** **94**



***WINSTA*® Mini**
Snap-In device sockets and plugs
2 poles **Series 890** **95**



***WINSTA*® Mini**
T-distribution connector
2 poles **Series 890** **96**



***WINSTA*® Mini**
T-distribution connector
Lockout cap
3 poles **Series 890** **97**

Sockets and plugs
2 poles

	0.25 – 1.5 mm² ❶ 250 V/4 kV/3 16 A 9 mm / 0.35 in ❷	AWG 22 - 16	0.25 – 1.5 mm² ❶ 250 V/4 kV/3 16 A 9 mm / 0.35 in ❷	AWG 22 - 16





Desccription	Color	Item no.	Pack. unit	Color	Item no.	Pack. unit
Connector, 2 poles, with CAGE CLAMP®S connection	**Socket without strain relief housing**			**Plug without strain relief housing**		
	blue	**890-1102**	50	blue	**890-1112**	50
Accessories						
Locking lever,						
tool operated,	black	**890-111**	100 (2 x 50)	black	**890-111**	100 (2 x 50)
for "flying leads"	white	**890-131**	100 (2 x 50)	white	**890-131**	100 (2 x 50)



Info	Dimensions (in mm)

❶ Connectable: 0.25 - 1.5 mm² "s + f-st"
0.25 - 1 mm² "stranded"

❷ Approvals in preparation

blue Coding I (+ -)

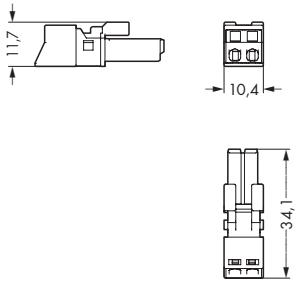

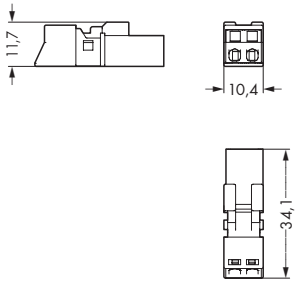

Snap-In device sockets and plugs
Lockout cap
2 poles

0.25 – 1.5 mm² ❶ 250 V/4 kV/3 16 A | AWG 22 - 16 9 mm / 0.35 in ❷	0.25 – 1.5 mm² ❶ 250 V/4 kV/3 16 A | AWG 22 - 16 9 mm / 0.35 in ❷	Lockout cap







Color	Item no.	Pack. unit	Color	Item no.	Pack. unit	Color	Item no.	Pack. unit
Socket			**Plug**			**Lockout cap, 2 poles**		
						for cutout		
blue	**890-2102**	50	blue	**890-2112**	50	black	**890-642**	100
						white	**890-692**	100
						Seal unused cutout with lockout cap.		

Dimensions (in mm)

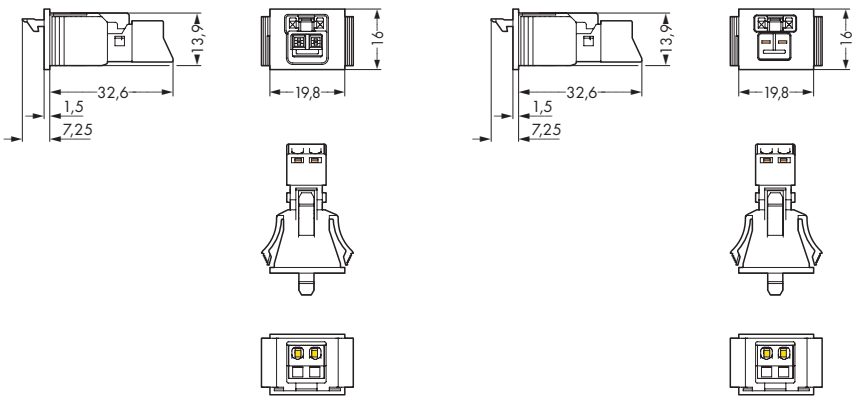

Dimensions cutout

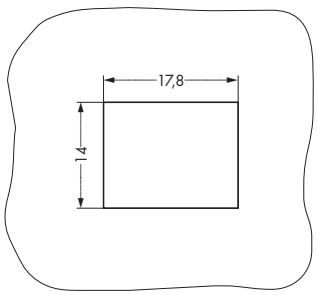

Panel thickness: 0.5 mm - 2 mm
Tolerance of the panel cutout: + 0.1 mm

WINSTA® MINI T-distribution connector 2 poles

	250 V/4 kV/3 I_N 16 A ❶	



Description	Color	Item no.	Pack. unit	
T-distribution connector, pluggable	**T-distribution connector, 1 x plug/2 x socket**			
Lockout cap				
	black	**890-1606** ●	25	
	white	**890-1656** ○	25	
	blue	**890-1617** ●	25	
	for "flying leads", with 3. locking lever			
	black	**890-1615** ●	25	
	white	**890-1665** ○	25	
	blue	**890-1620** ●	25	

Info

❶ Approvals in preparation

Coding 2 poles:

● black	Coding A	(L+ N-)
○ white	Coding A	(L+ N-)
● blue	Coding I	(+ -)

Coding 3 poles:

● black	Coding A	(L ⏚ N)
○ white	Coding A	(L ⏚ N)

Dimensions (in mm)

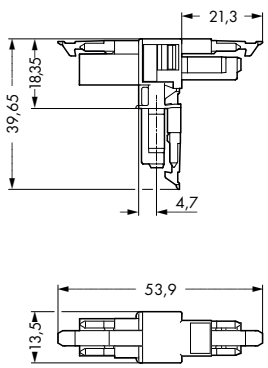

T-distribution connector
Lockout cap
3 poles

250 V/4 kV/3 **I_N 16 A** ❶		**Lockout cap**





Color	Item no.	Pack. unit
T-distribution connector, 1 x plug/2 x socket		
black	**890-606** ●	25
white	**890-656** ○	25
for "flying leads", with 3. locking lever		
black	**890-615** ●	25
white	**890-665** ○	25

Color	Item no.	Pack. unit
Lockout cap, 3 poles		
for cutout		
black	**890-643**	100
white	**890-693**	100

Dimensions (in mm)

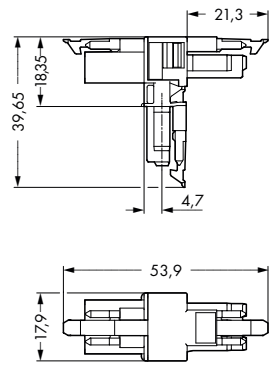

Dimensions cutout

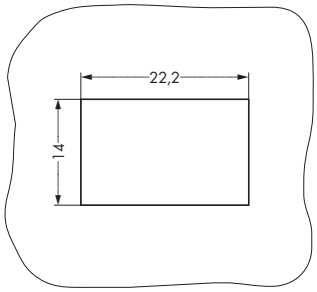

Panel thickness: 0.5 mm - 2 mm
Tolerance of the panel cutout: + 0,1 mm

Index of Item Nos.

Item no.	Page
Series 209	
209-105	15
209-183	31
209-184	31
209-192	90
Series 210	
210-133	15
210-136	6
210-137	6
210-281	15
210-331/0500-0103	63
210-331/050å0-0104	63
210-331/0750-0202	63
210-332/0350-0202	80
210-332/0350-0204	80
210-332/0381-0202	81
210-332/0381-0204	81
210-332/0500-0202	64
210-334	47
210-334/0762-0202	88
210-619	60
210-620	63
210-621	36, 88
210-657	90
210-658	90
Series 211	
211-110	54
211-111	54
211-112	54
211-113	54
211-114	54
211-115	54
211-120	54
211-121	54
211-122	54
211-123	54
211-124	54
211-125	54
211-129	55
211-150	55
211-151	55
211-155	55
211-156	55
Series 218	
218-102/000-604	60
218-102/000-604/997-403	60
218-103/000-604	60
218-103/000-604/997-405	60
218-104/000-604	60
218-104/000-604/997-405	60
218-105/000-604	60
218-105/000-604/997-405	60
218-106/000-604	60
218-106/000-604/997-405	60
218-107/000-604	60
218-107/000-604/997-405	60
218-502/000-604	60
218-502/000-604/997-403	60
218-503/000-604	60
218-503/000-604/997-405	60
218-504/000-604	60
218-504/000-604/997-405	60
218-505/000-604	60
218-505/000-604/997-405	60
218-506/000-604	60
218-506/000-604/997-405	60

Item no.	Page
218-507/000-604	60
218-507/000-604/997-405	60
Series 222	
222-412	46
222-413	46
222-415	46
Series 231	
231-129	74
231-132/001-000/105-604	74
231-132/001-000/105-604/997-405	74
231-133/001-000/105-604	74
231-133/001-000/105-604/997-405	74
231-134/001-000/105-604	74
231-134/001-000/105-604/997-407	74
231-135/001-000/105-604	74
231-135/001-000/105-604/997-407	74
231-136/001-000/105-604	74
231-136/001-000/105-604/997-407	74
231-138/001-000/105-604	74
231-138/001-000/105-604/997-407	74
231-140/001-000/105-604	74
231-140/001-000/105-604/997-409	74
231-142/001-000/105-604	74
231-142/001-000/105-604/997-409	74
231-159	79
231-307/107-000	85
231-308/107-000	85
231-309/107-000	85
231-312/107-000	85
231-314/107-000	85
231-315/107-000	85
231-316/107-000	85
231-337/108-000	85
231-338/108-000	85
231-339/108-000	85
231-340/108-000	85
231-342/108-000	85
231-344/108-000	85
231-345/108-000	85
231-346/108-000	85
231-432/001-000/105-604	75
231-432/001-000/105-604/997-405	75
231-433/001-000/105-604	75
231-433/001-000/105-604/997-405	75
231-433/040-000	83
231-434/001-000/105-604	75
231-434/001-000/105-604/997-407	75
231-435/001-000/105-604	75
231-435/001-000/105-604/997-407	75
231-436/001-000/105-604	75
231-436/001-000/105-604/997-407	75
231-438/001-000/105-604	75
231-438/001-000/105-604/997-407	75
231-440/001-000/105-604	75
231-440/001-000/105-604/997-409	75
231-442/001-000/105-604	75
231-442/001-000/105-604/997-409	75
231-463/040-000	83
231-500	74
231-537/108-000	85
231-538/108-000	85
231-539/108-000	85
231-540/108-000	85
231-542/108-000	85
231-544/108-000	85
231-545/108-000	85
231-546/108-000	85
231-637/109-000	85
231-638/109-000	85
231-639/109-000	85
231-640/109-000	85

Item no.	Page
231-642/109-000	85
231-644/109-000	85
231-645/109-000	85
231-646/109-000	85
231-670	82
231-671	82
231-672	82
231-903	84
231-905	84
231-907	84
231-910	84
231-2302/107-000	85
231-2303/107-000	85
231-2304/107-000	85
231-2305/107-000	85
231-2306/107-000	85
231-2307/107-000	85
231-2308/107-000	85
231-2309/107-000	85
231-2310/107-000	85
231-2311/107-000	85
231-2312/107-000	85
231-2313/107-000	85
231-2314/107-000	85
231-2315/107-000	85
231-2316/107-000	85
Series 236	
236-332	61
236-335	61
236-402/334-604	61
236-403/334-604	61
236-404/334-604	61
236-405/334-604	61
236-406/334-604	61
Series 248	
248- . . .	7
Series 249	
249- . . .	7
249-105	31
249-116	38
249-117	38
249-125	38
249-126	38
249-127	38
249-200	56
249-201	56
249-202	56
249-203	56
249-204	56
249-205	56
249-206	56
249-207	56
249-208	56
249-209	56
249-210	56
249-237	56
249-238	56
249-239	56
249-241	56
249-242	56
249-243	56
249-244	56
249-245	56
249-246	56
249-247	56
249-248	56
249-249	56
249-250	56

Item no.	Page
Series 250	
250-202/350-604	61
250-203/350-604	61
250-204/350-604	61
250-205/350-604	61
250-206/350-604	61
250-207/350-604	61
250-208/350-604	61
250-402/350-604	61
250-403/350-604	61
250-404/350-604	61
250-405/350-604	61
250-406/350-604	61
250-407/350-604	61
250-408/350-604	61
Series 258	
258-150	54
258-228	54
258-297	54
258-298	54
258-328	54
258-350	54
258-370	54
Series 280	
280-402	38
280-404	38
280-409	38
280-415	38
Series 282	
282-369	37
282-432	37
282-433	37
282-434	37
282-435	37
282-435/011-000	37
282-436	37
282-437	37
282-437/011-000	37
282-438	37
282-439	37
282-440	37
Series 283	
283-404	35
Series 285	
285-134	35
285-135	35
285-137	35
285-150	36
285-154	36
285-157	36
285-172	36
285-420	35
285-421	35
285-427	35
285-435	35
285-440	36
285-441	36
285-447	36
285-450	36

Item no.	Page
Series 298	
298-642	45
298-646	44
298-6 . .	44
Series 709	
709-350	49
709-352	49
Series 722	
722-102/026-000	82
722-103/026-000	82
722-104/026-000	82
722-105/026-000	82
722-106/026-000	82
722-107/026-000	82
722-108/026-000	82
722-109/026-000	82
722-110/026-000	82
722-111/026-000	82
722-112/026-000	82
722-113/026-000	82
722-114/026-000	82
722-115/026-000	82
722-116/026-000	82
722-117/026-000	82
722-118/026-000	82
722-119/026-000	82
722-120/026-000	82
722-202/026-000	82
722-203/026-000	82
722-204/026-000	82
722-205/026-000	82
722-206/026-000	82
722-207/026-000	82
722-208/026-000	82
722-209/026-000	82
722-210/026-000	82
722-211/026-000	82
722-212/026-000	82
722-213/026-000	82
722-214/026-000	82
722-215/026-000	82
722-216/026-000	82
722-217/026-000	82
722-218/026-000	82
722-219/026-000	82
722-220/026-000	82
Series 733	
733-102	70
733-102/037-000	70
733-103	70
733-103/037-000	70
733-104	70
733-104/037-000	70
733-105	70
733-105/037-000	70
733-106	70
733-106/037-000	70
733-107	70
733-107/037-000	70
733-108	70
733-108/037-000	70
733-109/037-000	70
733-110	70
733-110/037-000	70
733-111/037-000	70
733-112	70
733-112/037-000	70
733-202	70
733-203	70
733-204	70
733-205	70
733-206	70
733-207	70
733-208	70
733-210	70
733-212	70
Series 734	
734-114	76
734-114/037-000	76
734-126	86
734-127	86
734-128	86
734-129	86
734-130	72
734-132/105-604	72
734-132/105-604/997-405	72
734-133/105-604	72
734-133/105-604/997-405	72
734-134/105-604	72
734-134/105-604/997-405	72
734-135/105-604	72
734-135/105-604/997-405	72
734-136/105-604	72
734-136/105-604/997-407	72
734-138/105-604	72
734-138/105-604/997-407	72
734-140/105-604	72
734-140/105-604/997-407	72
734-142/105-604	72
734-142/105-604/997-407	72
734-144	54
734-162/105-604	73
734-162/105-604/997-405	73
734-163/105-604	73
734-163/105-604/997-405	73
734-164/105-604	73
734-164/105-604/997-405	73
734-165/105-604	73
734-165/105-604/997-405	73
734-166/105-604	73
734-166/105-604/997-407	73
734-168/105-604	73
734-168/105-604/997-407	73
734-170/105-604	73
734-170/105-604/997-407	73
734-172/105-604	73
734-172/105-604/997-407	73
734-174	76
734-226	86
734-227	86
734-228	86
734-229	86
734-231	79
734-314	76
734-326	6
734-327	6
734-328	6
734-329	6
734-362	77
734-362/037-000	77
734-363	77
734-363/037-000	77
734-364	77
734-364/037-000	77
734-365	77
734-365/037-000	77
734-366	77
734-366/037-000	77
734-367	77
734-367/037-000	77
734-368	77
734-368/037-000	77
734-369	77
734-369/037-000	77
734-370	77
734-370/037-000	77
734-372	77
734-372/037-000	77
734-420	78
734-426	86
734-427	86
734-428	86
734-429	86
734-430	86
734-431	86
734-462	80
734-463	80
734-464	80
734-465	80
734-466	80
734-467	80
734-468	80
734-469	80
734-470	80
734-472	80
734-473	80
734-474	80
734-476	80
734-478	80
734-480	80
734-484	80
734-502	81
734-503	81
734-504	81
734-505	81
734-506	81
734-507	81
734-508	81
734-509	81
734-510	81
734-512	81
734-514	81
734-516	81
734-520	81
734-532	80
734-533	80
734-534	80
734-535	80
734-536	80
734-537	80
734-538	80
734-539	80
734-540	80
734-542	80
734-543	80
734-544	80
734-546	80
734-548	80
734-550	80
734-554	80
734-562	81
734-563	81
734-564	81
734-565	81
734-566	81
734-567	81
734-568	81
734-569	81
734-570	81
734-572	81
734-574	81
734-576	81
734-580	81
Additional nos.	
734- . . . /037-000	80
Series 735	
735-500	60
Series 745	
745-300	68
745-338	68
745-340	68
745-345	68
745-380	68
745-381	68
745-382	68
745-383	68
745-384	68
745-385	68
745-390	68
745-391	68
745-392	68
745-393	68
745-394	68
745-395	68
745-831	68
745-833	68
745-834	68
745-837	68
745-838	68
745-841	68
745-843	68
745-844	68
745-847	68
745-848	68
745-1352	69
745-1353	69
745-1354	69
745-1355	69
745-1356	69
745-1357	69
745-1358	69
745-1359	69
745-1360	69
745-1362	69
745-1402	69
745-1403	69
745-1404	69
745-1405	69
745-1406	69
745-1407	69
745-1408	69
745-1409	69
745-1410	69
745-1412	69
745-1452	69
745-1453	69
745-1454	69
745-1455	69
745-1456	69
745-1457	69
745-1458	69
745-1459	69
745-1460	69
745-1462	69
745-3100	66
745-3102	66
745-3103	66
745-3104	66
745-3105	66
745-3106	66
745-3107	66
745-3108	66
745-3109	66
745-3110	66
745-3112	66
745-3138	66
745-3152	67
745-3153	67
745-3154	67
745-3155	67
745-3156	67
745-3157	67
745-3158	67
745-3159	67
745-3160	67

Item no.	Page
745-3162	67
745-3202	67
745-3203	67
745-3204	67
745-3205	67
745-3206	67
745-3207	67
745-3208	67
745-3209	67
745-3210	67
745-3212	67
745-3252	67
745-3253	67
745-3254	67
745-3255	67
745-3256	67
745-3257	67
745-3258	67
745-3259	67
745-3260	67
745-3262	67
745-3801	66
745-3803	66
745-3804	66
745-3807	66
745-3808	66
Additional nos.	
745- . . . /005-000	69
745- . . . /000-006	67
745- . . . /000-009	67
745- . . . /000-016	67
745- . . . /000-017	67
Series 746	
746-2302	65
746-2303	65
746-2304	65
746-2305	65
746-2306	65
746-2307	65
746-2308	65
746-2309	65
746-2310	65
746-2311	65
746-2312	65
Additional nos.	
746- . . . /000-006	65
746- . . . /000-009	65
746- . . . /000-016	65
746- . . . /000-017	65
Series 769	
769-101/000-006	42
769-102/000-006	42
769-103/000-006	42
769-103/000-038	42
769-103/000-039	42
769-104/000-006	42
769-105/000-006	42
769-105/000-038	42
769-105/000-039	42
769-106/000-006	42
769-107/000-006	42
769-108/000-006	42
769-109/000-006	42
769-110/000-006	42
769-111/000-006	42
769-112/000-006	42
769-113/000-006	42
769-114/000-006	42
769-115/000-006	42
769-171/000-006	42
769-176/000-006	42

Item no.	Page
769-242	40
769-243	40
769-251	38
769-251/000-006	42
769-257	38
769-317	40
769-318	40
769-319	40
769-320	38
769-321	38
769-402	42
769-434	39
769-435	38
769-470	38
769-471	38
769-472	38
769-501	44
769-501/000-006	44
769-501/000-016	44
769-502	44
769-502/000-006	44
769-502/000-016	44
769-503	44
769-503/000-006	44
769-503/000-016	44
769-504	44
769-504/000-006	44
769-504/000-016	44
769-505	44
769-505/000-006	44
769-505/000-016	44
769-506	44
769-506/000-006	44
769-506/000-016	44
769-512	45
769-512/000-006	45
769-512/000-016	45
769-513	45
769-513/000-006	45
769-513/000-016	45
769-515	45
769-515/000-006	45
769-515/000-016	45
Series 773	
773-173	47
773-332	47
773-514	47
Series 777	
777-303	15
Series 780	
780-452	38
780-453	38
780-454	38
780-455	38
780-456	38
780-457	38
780-458	38
Series 790	
790-110	48
790-112	48
790-114	48

Item no.	Page
790-300	49
790-301	49
Series 791	
791-107	48
791-111	48
791-117	48
791-124	48
Series 793	
793-4...	6
793-5...	6
Series 794	
794-4...	6
794-5...	6
Series 804	
804-102	63
804-103	63
804-104	63
804-105	63
804-106	63
804-107	63
804-108	63
804-109	63
804-110	63
804-111	63
804-112	63
804-113	63
804-114	63
804-115	63
804-116	63
804-302	63
804-303	63
804-304	63
804-305	63
804-306	63
804-307	63
804-308	63
804-309	63
804-310	63
804-311	63
804-312	63
Additional nos.	
804- . . . /000-005	63
804- . . . /000-006	63
804- . . . /000-012	63
804- . . . /000-017	63
Series 806	
806-102	64
806-103	64
806-104	64
806-105	64
806-106	64
806-107	64
806-108	64
806-109	64
806-110	64
806-111	64
806-112	64
806-202	64
806-203	64
806-204	64

Item no.	Page
806-205	64
806-206	64
806-207	64
806-208	64
806-209	64
806-210	64
806-211	64
806-212	64
806-902	64
806-903	64
806-904	64
806-905	64
806-906	64
806-907	64
806-908	64
806-909	64
806-910	64
806-911	64
806-912	64
Additional nos.	
806- . . . /000-006	64
806- . . . /000-012	64
Series 807	
807-0090/0101-0100	53
Series 831	
831-137	88
831-3102	89
831-3102/037-000	89
831-3103	89
831-3103/037-000	89
831-3104	89
831-3104/037-000	89
831-3105	89
831-3105/037-000	89
831-3106	89
831-3106/037-000	89
831-3107	89
831-3107/037-000	89
831-3108	89
831-3108/037-000	89
831-3202	88
831-3202/007-000	88
831-3203	88
831-3203/007-000	88
831-3204	88
831-3204/007-000	88
831-3205	88
831-3205/007-000	88
831-3206	88
831-3206/007-000	88
831-3207	88
831-3207/007-000	88
831-3208	88
831-3208/007-000	88
831-3602	87
831-3603	87
831-3604	87
831-3605	87
831-3606	87
831-3607	87
831-3608	87
831-3622	87
831-3623	87
831-3624	87
831-3625	87
831-3626	87
831-3627	87
831-3628	87

Item no.	Page
Serie 870	
870-151	41
870-157	41
870-168	41
870-169	41
870-402	41
870-403	41
870-404	41
870-405	41
870-406	41
870-407	41
870-408	41
870-409	41
870-410	41
870-433	41
870-434	41
870-435	41
870-436	41
870-437	41
870-438	41
870-439	41
870-440	41
Series 2001	
2001-511	6
2001-549	6
2001-552	7
2001-553	7
2001-554	7
2001-555	7
2001-556	7
2001-557	7
2001-558	7
2001-559	7
2001-560	7
2001-1201	23
2001-1211/1000-0410	23
2001-1211/1000-0411	23
2001-1291	23
2001-1292	23
2001-1301	23
2001-1311/1000-0410	23
2001-1311/1000-0411	23
2001-1321/1000-0413	23
2001-1321/1000-0434	23
2001-1391	23
2001-1392	23
2001-1401	23
2001-1411/1000-0410	23
2001-1411/1000-0411	23
2001-1421/1000-0413	23
2001-1421/1000-0434	23
2001-1441	6
Series 2002	
2002-0405/0011-000	30
2002-115	4
2002-121	8
2002-131	10
2002-171	5
2002-172	5
2002-402	5
2002-403	5
2002-404	5
2002-405	5
2002-406	5
2002-407	5
2002-408	5
2002-409	5
2002-410	5
2002-433	5
2002-434	5
2002-435	5
2002-436	5
2002-437	5
2002-438	5
2002-439	5
2002-440	5
2002-472	14
2002-473	14
2002-473/0011-0000	14
2002-474	14
2002-475	14
2002-475/0011-0000	14
2002-476	14
2002-477	14
2002-477/0011-0000	14
2002-478	14
2002-479	14
2002-479/0011-0000	14
2002-480	14
2002-481	14
2002-481/0011-0000	14
2002-482	14
2002-511	6
2002-541	6
2002-549	6
2002-552	7
2002-553	7
2002-554	7
2002-555	7
2002-556	7
2002-557	7
2002-558	7
2002-559	7
2002-560	7
2002-1201	24
2002-1211/1000-0410	24
2002-1211/1000-0411	24
2002-1291	24
2002-1292	24
2002-1293	91
2002-1294	91
2002-1393	91
2002-1394	91
2002-1493	91
2002-1494	91
2002-1301	24
2002-1311/1000-0410	24
2002-1301/1000-0411	24
2002-1321/1000-0413	24
2002-1321/1000-0434	24
2002-1391	24
2002-1392	24
2002-1401	24
2002-1411/1000-0410	24
2002-1411/1000-0411	24
2002-1421/1000-0413	24
2002-1421/1000-0434	24
2002-1441	4
2002-1491	4
2002-1492	4
2002-1601	20
2002-1602	20
2002-1604	20
2002-1671	20
2002-1672	20
2002-1674	20
2002-1691	20
2002-1692	20
2002-1801	21
2002-1802	21
2002-1804	21
2002-1871	21
2002-1872	21
2002-1874	21
2002-1891	21
2002-1892	21
2002-2201	8
2002-2202	8
2002-2203	8
2002-2204	8
2002-2207	8
2002-2208	8
2002-2209	8
2002-2211/1000-0410	26
2002-2211/1000-0411	26
2002-2213/1000-0487	27
2002-2213/1000-0488	27
2002-2214/1000-0489	27
2002-2214/1000-0490	27
2002-2214/1000-0491	26
2002-2214/1000-0492	26
2002-2217	8
2002-2227	8
2002-2221/1000-0413	27
2002-2221/1000-0434	27
2002-2231	8
2002-2232	8
2002-2233	8
2002-2234	8
2002-2237	8
2002-2238	8
2002-2239	8
2002-2247	8
2002-2257	8
2002-2291	8
2002-2292	8
2002-2401	9
2002-2402	9
2002-2403	9
2002-2404	9
2002-2407	9
2002-2408	9
2002-2409	9
2002-2417	9
2002-2427	9
2002-2431	9
2002-2432	9
2002-2433	9
2002-2434	9
2002-2437	9
2002-2438	9
2002-2439	9
2002-2447	9
2002-2457	9
2002-2491	9
2002-2492	9
2002-2951	22
2002-2952	22
2002-2954	22
2002-2958	22
2002-2959	22
2002-2971	22
2002-2972	22
2002-2974	22
2002-2991	22
2002-2992	22
2002-3201	10
2002-3203	10
2002-3204	10
2002-3207	10
2002-3208	10
2002-3209	10
2002-3211/1000-0410	28
2002-3211/1000-0411	28
2002-3211/1000-0675	28
2002-3211/1000-0676	28
2002-3212/1000-0673	29
2002-3212/1000-0674	29
2002-3221/1000-0413	29
2002-3221/1000-0434	29
2002-3217	10
2002-3218	10
2002-3227	10
2002-3228	10
2002-3231	10
2002-3233	10
2002-3234	10
2002-3237	10
2002-3238	10
2002-3239	10
2002-3247	10
2002-3248	10
2002-3257	10
2002-3258	10
2002-3291	10
2002-3292	10
2002-6301	5
2002-6302	5
2002-6304	5
2002-6307	5
2002-6391	5
2002-6392	5
2002-6401	5
2002-6402	5
2002-6404	5
2002-6407	5
2002-7111	16
2002-7114	16
2002-7192	16
Series 2003	
2003-7641	14
2003-7642	14
2003-7645	14
2003-7646	14
2003-7649	14
2003-7692	14
Series 2004	
2004-402	15
2004-403	15
2004-404	15
2004-405	15
2004-406	15
2004-407	15
2004-408	15
2004-409	15
2004-410	15
2004-0405/0011-000	30
2004-433	15
2004-434	15
2004-435	15
2004-436	15
2004-437	15
2004-438	15
2004-439	15
2004-440	15
2004-511	6
2004-541	6
2004-549	6
2004-552	7
2004-553	7
2004-554	7
2004-555	7
2004-1293	91
2004-1294	91
2004-1393	91
2004-1394	91
2004-1493	91
2004-1494	91

Item no.	Page
Series 2005	
2005-7641	15
2005-7642	15
2005-7645	15
2005-7646	15
2005-7649	15
2005-7692	15
Series 2006	
2006-0405/0011-000	30
2006-1293	91
2006-1294	91
2006-1393	91
2006-1394	91
2006-7111	16
2006-7114	16
2006-7192	16
Series 2009	
2009-110	6
2009-115	7
2009-130	6
2009-174	5
2009-182	5
2009-184	56
2009-191	31
2009-192	31
2009-193	31
2009-196	31
2009-304	15
2009-305	15
2009-310	90
2009-412	30
2009-414	30
2009-416	30
Series 2010	
2010-100	31
2010-0405/0011-000	30
Series 2016	
2016-100	31
2016-0405/0011-000	30
2016-1207	14
2016-7111	16
2016-7114	16
2016-7192	16

Item no.	Page

Item no.	Page

Item no.	Page

Notes

Notes

Notes

Notes

Notes

Notes

Notes

WAGO Worldwide – Companies and Representations –

Argentina
Bruno Schillig S.A.
Arenales 4030, B1604CFD
Florida, PBA
Phone +54 11 4730 1100
Fax +54 11 4761 7244
robertor@schillig.com.ar

Australia
NHP ELECTRICAL ENGINEERING PRODUCTS PTY LTD
43-67 River Street
Richmond, Victoria, 3121
P.O. Box 199
Phone +61 3 9429 2999
Fax +61 3 9429 1075
export@wago.com

Austria
WAGO Kontakttechnik Ges.m.b.H.
Laxenburger Straße 244
1230 Wien
Phone +43 1 6150780
Fax +43 1 6150775
info.at@wago.com

Belgium
WAGO Kontakttechnik
Excelsiorlaan 11
1930 Zaventem
Phone +32 2 7179090
Fax +32 2 7179099
info-be@wago.com

Bosnia and Herzegovina
please contact WAGO Bulgaria

SC_Technik doo
Kadić Mahala 47
Bosnia-Herzegovina
Phone +387 35 821815
Fax +387 35 821816
sc_technik@yahoo.de

Brasil
WAGO Eletroeletrônicos Ltda
Rua Américo Simões 1470
Sãu Roque da Chave
Itupeva SP Brasil 13295-000
Phone +55 11 4591 0199
Fax +55 11 4591 0190
info.br@wago.com

Bulgaria
WAGO Kontakttechnik GmbH & Co. KG
Representative Office Sofia Bulgaria
Twardischiki Prohod 21, ap.5
1404 Sofia
Phone +359 2 489 46 10
Fax +359 2 859 21 31
info-BG@wago.com

RIM Project Ltd.
Probuda - 12 A str., et. 7
Sofia
Bulgaria
Phone +359 2 9310666
Fax +359 2 9313839
office@rim-bg.com

Canada
WAGO CORPORATION
N120 W19129 Freistadt Road
Germantown, WI 53022
Phone +1 262 255 6222
Fax +1 262 255 3232
Toll-Free: 1-800 DIN Rail (346-7245)
info.us@wago.com

Chile
Desimat Chile
Av Puerto Vespucio 9670
Pudahuel Santiago
Phone +56 2 7470152
Fax +56 2 7470153
ventaschile@desimat.cl

China
WAGO ELECTRONIC (TIANJIN) Co. LTD
No.5, Quan Hui Road
Wuqing Development Area
Tianjin 301700
Phone +86 22 59617688
Fax +86 22 59617668
info-cn@wago.com

Columbia
T.H.L. Ltda.
Cra. 49 B # 91-33
Bogotá
Phone +57 1 621 85 50
Fax +57 1 621 60 28
ventas-thl@thl-ltda.com

Croatia
M.B.A. d.o.o. za trgovinu i zastupanje
Frana Supila 5
51211 Matulji HR
Phone +00385 51 275-736
Fax +00385 51 275-066
mba@ri.htnet.hr

Czech Republic
WAGO Elektro spol. sr. o.
Nad lesem 21
14700 Praha 4 - Hodkovicky
61400 Brno - Husovice
Phone +420 261 090 143
Fax +420 261 090 144
info.cz@wago.com

Denmark
WAGO Danmark
Filial of WAGO Kontakttechnik GmbH & Co. KG
Lejrvej 29
3500 Værløse
Phone +45 44 357777
Fax +45 44 357787
salg.dk@wago.com

Ecuador
INSETEC CIA. LTDA.
El Zurriago 177 y El Vengador
P.O. Box 17-16-016
Quito
Phone +593 2 2 26 91 48
Fax +593 2 2 46 18 33
g.castro@insetec.com.ec

Egypt
IBN Engineering Instrumentation & Control
71 a El Shaheed Ahmed Hamdi St.
King Faisal, Giza
Phone +20 2 7214350
Fax +20 2 7221709
sales@ibnengineering.com

Estland
Eltarko OÜ
Laki 14 - 502
10621 Tallinn
Phone +372 651 7731
Fax +372 651 7786
andres@eltarko.ee

Finland
WAGO Kontakttechnik GmbH & Co. KG
Filial i Finland
Vellamonkatu 30 B
00550 Helsinki
Phone +358 9 7744 060
Fax +358 9 7744 0660
export@wago.com

France
WAGO CONTACT S.A.
Paris Nord 2
83 Rue des Chardonnerets
B.P. 55065 - Tremblay en France
95947 - ROISSY CDG CEDEX
Phone +33 1 48172590
Fax +33 1 48632520
info-fr@wago.com

Germany
WAGO Kontakttechnik GmbH & Co. KG
Postfach 28 80 32385 Minden
Hansastrasse 27
32423 Minden
Phone +49 571 887-0
Fax +49 571 887-169
info@wago.com

Great Britian
WAGO Limited
Triton Park, Swift Valley Industrial Estate
RUGBY
Warwickshire, CV21 1SG
Phone +44 1788 568008
Fax +44 1788 568050
uksales@wago.com

Greece
PANAGIOTIS SP. DIMOULAS - BIOMAT
Kritis Str. 26
10439 Athen
Phone +30 210 883 3337
Fax +30 210 883 4436
export@wago.com

Hong Kong
National Concord Eng., Ltd.
Unit A-B, 5/F.
Southeast Industrial Building
611-619 Castle Peak Road
Tsuen Wan, N.T.
Phone +852 24292611
Fax +852 24292164
sales@nce.com.hk

Hungary
WAGO Hungájria KFT
Ipari Park, Gyár u. 2
2040 Budapest
Phone +36 23 502-170
Fax +36 23 502-166
info@wago.hu

Iceland
S. Gudjonsson ehf.
Audbrekku 9-11
202 Kopavogur
Phone +354 520-4500
Fax +354 520-4501
export@wago.com

India
WAGO & CONTROLS (INDIA) LTD.
C-27, Sector-58, Phase-III
Noida-201 301
Gautam Budh Nagar (U.P)
Phone +91 120 2 580409 10
Fax +91 120 2 580081
info@wagoindia.com

Indonesia
PT. Timur Agungmulia Kencana
Graha Mulxindo Lt. 2
Jl. Sultan Iskandar Muda No. 88 L
Jakarta Selatan 12240
Phone +62 21 722 8888
Fax +62 21 722 8565
tak_electric@cbn.net.id

Iran
Patsa Industry
No. 2 Bahar St.
South Shiraz Ave
P.O. Box.: 15875-1698
14369 Tehran
Phone +98 21 8726869
Fax +98 21 8719666
export@wago.com

Ireland
Drives & Controls
Unit F4, Riverview Business Park
Nangor Road
Dublin 12
Phone +353 1 4604474
Fax +353 1 4604507
wago@drivesandcontrols.ie

Israel
Comtel Israel Electronic Solutions Ltd.
Bet Hapaamon
20 Hataas Street
P.O.Box 66
44425 Kefar-Saba
Phone +972 9 76 77 240
Fax +972 9 76 77 243
sales@comtel.co.il

Italy
WAGO ELETTRONICA SRL
Via Vittoria, 5/b
40068 San Lazzaro di Savena (BO)
Phone +39 051 6272170
Fax +39 051 6272174
info-ita@wago.com

Japan
WAGO Co. of JAPAN Ltd.
Nittetsu ND-Tower Building 4F
Kameido 1-5-7
Koto-Ku
Tokyo 136-0071
Phone +81 3 5627 2050
Fax +81 3 5627 2055
info-jp@wago.com

Korea
Hankuk Sangsa Co. &
Mahani Electric Co. Ltd.
576-8, Bisan-2dong, Dongan-Ku
Anyang-City
Kyungki-Do., 431-821
Phone +82 31 4633300
Fax +82 31 4633398 9
export@wago.com

Kosovo
please contact WAGO Bulgaria

Kuwait
Kuwait Controls Company
Al Sour Street, Above Lufthansa Airline
Safat Kuwait 13062
Phone +965 822 522
Fax +965 243 3698

Latvia
INSTABALT LATVIA SIA
Vestienas iela 6
Rīga, LV-1035
Phone +371 790 1188
Fax +371 790 1180
info@instabalt.lv

Lebanon
G.T.C.
Antonine Project – Block G
P.O.BOX 70-1096 Antelias
Lebanon
Phone +961 4 521 029
Fax +961 4 521 029
rgemayel@inco.com.lb

Lithuania
INSTABALT LIT UAB
Savanorių 187
Vilnius, 2053
Phone +370 52 322 295
Fax +370 52 322 247
info@instabalt.lt

Luxembourg
please contact WAGO Belgium

Macedonia
please contact WAGO Bulgaria

Malaysia
WAGO Representative Office Malaysia
No 806, Block A4, Leisure Commerce Square,
No 9, Jalan PJS 8/9, 46150 Petaling Jaya,
Selangor Darul Ehsan, Malaysia
Phone +60 3 7877 1776
Fax +60 3 7877 2776
kian.guan.tan@wago.com

Mexico
WAGO CORPORATION
N120 W19129 Freistadt Road
Germantown, WI 53022
Phone +52 55 26 44 69 16
Fax +52 55 26 44 69 15
Toll-Free: 001-800-309-5975
info.mx@wago.com

Netherlands
WAGO Nederland
van Leeuwenhoekstraat 20-1
3846 CB Harderwijk
Phone +31 341 439039
Fax +31 341 439030
info-nl@wago.com

New Zealand
NHP NZ
7 Lockhart Place
Mt Wellington
New Zealand
Phone +64 9 2761967
Fax +64 9 2761992
export@wago.com

Norway
WAGO Norge NUF
Jerikoveien 20
1067 Oslo
Phone +47 22 30 94 50
Fax +47 22 30 94 51
info.no@wago.com

Peru
Desimat Peru
Av. E. Salazar Barreto No. 280
Surco - Lima 33
Phone +51 1 2731892
Fax +51 1 2720054
export@wago.com

Philippines
WAGO Electronic Pte Ltd
10 Upper Aljunied Link, # 04-04
York International, Industrial Building
Singapore 367904
Phone +65 62866776
Fax +65 62842425
info.sing@wago.com

Poland
WAGO ELWAG sp. z o. o.
ul. Piękna 58 a
50-506 Wrocław
Phone +48 71 3604670 78
Fax +48 71 3604699
wago.elwag@wago.com

Portugal
MORGADO & CA. LDA - SEDE
Estrada Exterior da
Circunvalação 3558/3560
Apartado 1057
4435 Rio Tinto
Phone +351 22 9770600
Fax +351 22 9770699
export@wago.com

Romania
please contact WAGO Bulgaria

VDR & Servicii srl
Str. Valeriu Braniște, nr. 60, ap.1, sector 3
Romania
Phone +40 21 3225074/76
Fax +40 21 3225075
office@componente-automatizari.ro

ETA Automatizari Industriale SRL
Str. Gh. Dima Nr. 1
Romania
Phone +40 256 294608
Fax +40 256 294609
automatizari@eta2u.ro

Russia
ООО ВАГО Контакт Рус
ул. Лесная, 43, офис 329
127055 Москва
Phone +7 499 9786670
Fax +7 499 9786690
info@wago.ru

Saudi Arabia
Al Quraishi Electrical Services of S. A.
P.O. Box 7386
Dammam-31462
Phone +966 3 85 725 37
Fax +966 3 85 725 41
export@wago.com

Serbia
please contact WAGO Bulgaria

Singapore
WAGO Electronic Pte Ltd
10 Upper Aljunied Link, # 04-04
York International, Industrial Building
Singapore 367904
Phone +65 62866776
Fax +65 62842425
info.sing@wago.com

Slovakia
WAGO Elektrik spol.s r. o
Odborárska 52
83102 Bratislava
Phone +421 2 44458301
Fax +421 2 44458301
export@wago.com

South Africa
Shorrock Automation (Pty) Ltd
Postnet Suite # 219
Private Bag X 8,Elardus Park
0047 PRETORIA
Phone +27 12 3454449
Fax +27 12 3455145
sales@shorrock.co.za

Spain
DICOMAT S.L.
Avda. de la Industria, 36
Apartado Correos, 1.178
28108-Alcobendas (Madrid)
Phone +34 91 6621362 (6 lineas)
Fax +34 91 6610089
madrid@dicomat-asetyc.com

Sweden
WAGO Sverige
WAGO Kontakttechnik GmbH
Tyskland Filial
Box 639, 17527 Järfälla
Datavägen 9 A, 17543 Järfälla
Phone +46 858410680
Fax +46 858410699
info.se@wago.com

Switzerland
WAGO CONTACT SA
Rte. de l Industrie 19
Case Postale 168
1564 Domdidier
Phone +41/26 676 75 86 (Phone German)
Fax +41/26 676 75 88 (Phone Italian)
info.switzerland@wago.com

Syria
Zahabi Co.
8/5 Shouhadaa St., P.O. Box 8262
Aleppo
Phone +963 21 21 22 235 / 6
Fax +963 21 21 24 768
export@wago.com

Taiwan R.O.C.
WAGO Taiwan
8/F., No. 48, Jing-An Road
Chung-Ho City, 23556
Taipei Hsien. T a i w a n
Phone +886 2 2244 2569
Fax +886 2 2244 2658

Thailand
WAGO Representative Office Thailand
4th Floor, KS Building
213/6-8 Rachada-Phisek Road
Dingdaeng Bangkok 10320
Phone +66 2 6935611
Fax +66 2 6935612
pote.c@wago.com

Turkey
WAGO Elektronik Sanayi ve Ticaret Ltd. Şti.
Barbaros Mahallesi Mimar Sinan Caddesi No 169
34746 Yenisahra - Kadıköy Istanbul
Turkey
Phone +90 216 472 1133
Fax +90 216 472 9910
info.tr@wago.com

United Arab Emirates (UAE)
Binghalib Engineering Ent.
Trading Division
Al Khabeshi Area
P.O. Box 14743
Dubai
Phone +971 4 2674555
Fax +971 4 2674117
export@wago.com

USA
WAGO Corporation
N120 W19129 Freistadt Road
Germantown, WI 53022
Phone +1 262 255 6222
Fax +1 262 255 3232
Toll-Free: 1-800 DIN Rail (346-7245)
info.us@wago.com

Venezuela
PETROBORNAS, C.A.
Av. Principal UD 304-Zona Ind. Los Pinos
C.C. Los Pinos-Local E
8015-Puerto Ordaz-Edo, Bolivar
Phone +58 286 994 3406
Fax +58 286 994 5249
info@petrobornas.net

Vietnam
please contact WAGO Singapore

20.08.07/E



4 045454 648275

WAGO INNOVATIVE CONNECTIONS

51196976 · 0888-1001/1107-3601 · New Items Connection Technology · E · Autumn 2007 · JA 71455 · Printed in Germany · Subject to design changes