Rail-Mounted Terminal Blocks
– Product Summary –

Series 2001/2002/2004/2006/2010/2016 TOPJOB®S Through terminal blocks/ground (earth) terminal blocks

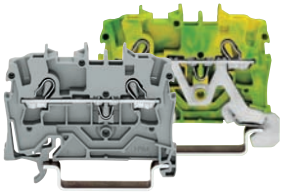

2-conductor terminal blocks

mm²/AWG	0.25 –1.5 (2.5)/14	0.25 –2.5 (4)/12	0.5 –4 (6)/10
Page 3.	4	5	6

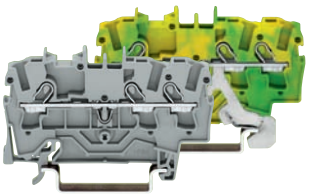

3-conductor terminal blocks

mm²/AWG	0.5 – 6 (10)/8	0.5 –10 (16)/6	0.5 –16 (25"f-st")/4
Page 3.	7	8	9

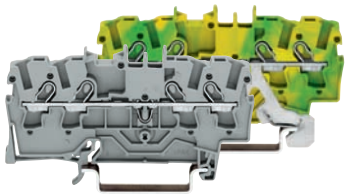

4-conductor terminal blocks

mm²/AWG	0.25 –1.5 (2.5)/14	0.25 –2.5 (4)/12	0.5 –4 (6)/10
Page 3.	4	5	6

Series 2002 TOPJOB®S Double deck terminal blocks

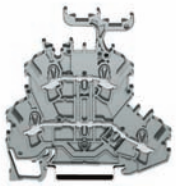

Through/through connection

mm²/AWG	2.5 (4)/12
Page	3.10



Ground (earth)/through connection

mm²/AWG	2.5 (4)/12
Page	3.10

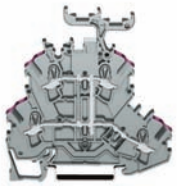

4-conductor terminal blocks

mm²/AWG	2.5 (4)/12
Page	3.10



4-conductor ground (earth) terminal blocks

mm²/AWG	2.5 (4)/12
Page	3.10

Series 2002 TOPJOB®S Triple deck terminal blocks



Through/through/through connection

mm²/AWG	2.5 (4)/12
Page	3.11

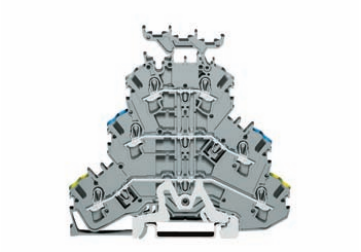

Shield (screen)/through/through connection

mm²/AWG	2.5 (4)/12
Page	3.11

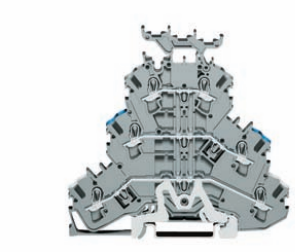

Ground (earth)/through/through connection

mm²/AWG	2.5 (4)/12
Page	3.11

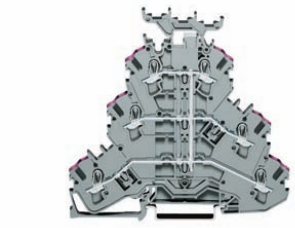

6-conductor-terminal blocks

mm²/AWG	2.5 (4)/12
Page	3.11



6-conductor ground (earth) terminal blocks

mm²/AWG	2.5 (4)/12
Page	3.11

Rail-Mounted Terminal Blocks with CAGE CLAMP®S Series 2001, 2002, 2004, 2006, 2010 and 2016

CAGE CLAMP®S connection

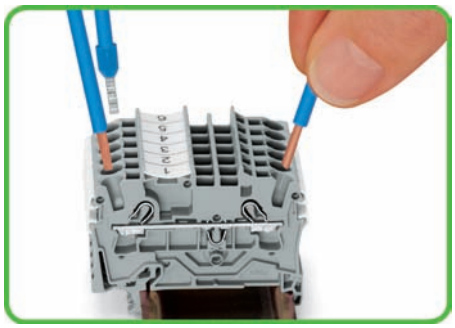

Direct insertion – Solid conductors with cross sections from either one cross section size above or up to two cross section sizes below the rated cross section can be pushed in directly - without tools.

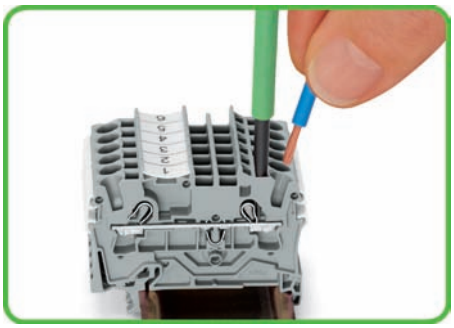

With screwdriver – the operation of the clamp remains the same for unprepared flexible conductors or small cross sections that don't allow direct insertion.

In exactly the same way as the original CAGE CLAMP® , CAGE CLAMP®S is operated using a screwdriver when removing the conductor.

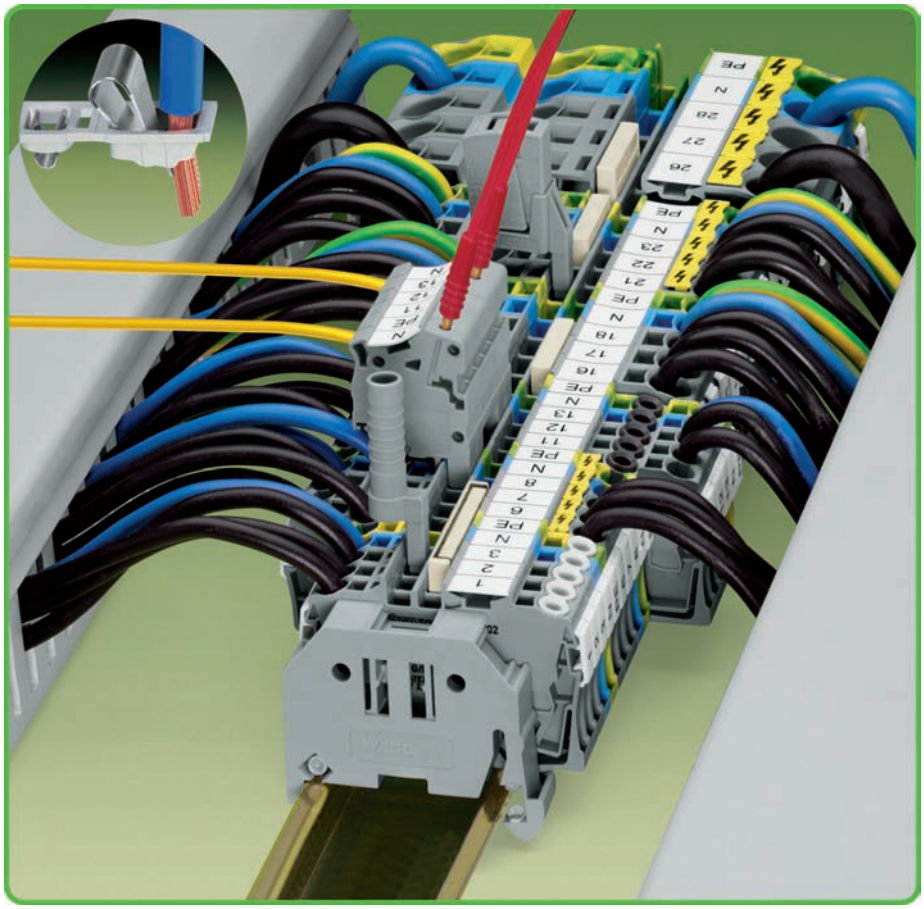

Commoning

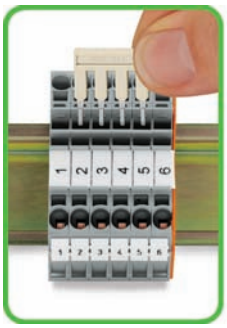

Twin integrated, spring-loaded jumper system allows the use of comb-type jumper bars and test plugs.

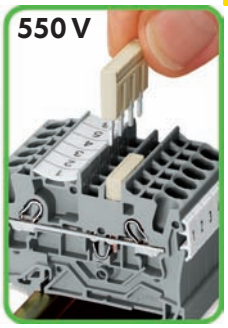

The rated voltage of the jumper bars is 550 V (ex works) for Ex applications.

Testing

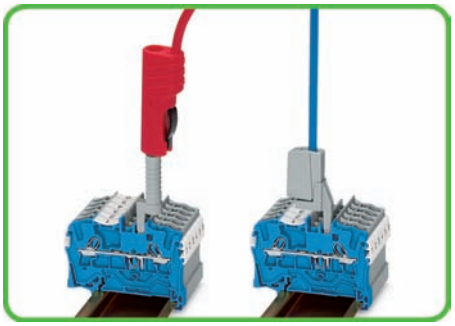

Testing of TOPJOB®S rail-mounted terminal blocks using test plug or testing tap.

Marking



A thermal transfer printer and the WAGO "smart designer" software generate the marking.

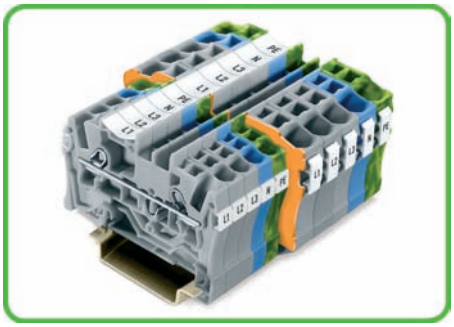

TOPJOB®S offers three marking positions for WMB markers, miniature WSB markers or a full length marking strip.

Connection possibility

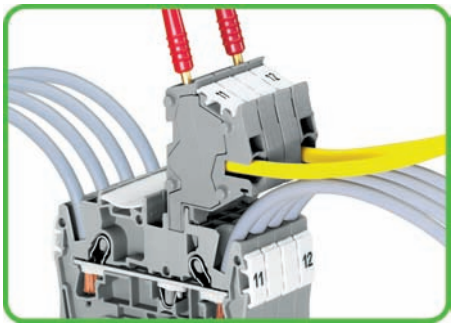

Modular connectors with CAGE CLAMP®S connection provide an additional connection possibility for 2 mm Ø or 2.3 mm Ø test plugs.



fine-stranded wire, tip bonded



fine-stranded wire with crimped ferrule



fine-stranded wire with crimped pin terminal

TOPJOB®S
Ex Terminal Blocks 1.5 (2.5) mm² /AWG 14, Series 2001

0.25 – 1.5 (2.5) mm² ❶ | AWG 22 – 14 **550 V** **17 A** **Terminal block width 4.2 mm / 0.165 in** **9 – 11 mm / 0.39 in** * Ex	**0.25 – 1.5 (2.5) mm² ❶ | AWG 22 – 14** **550 V** **17 A** **Terminal block width 4.2 mm / 0.165 in** **9 – 11 mm / 0.39 in** * Ex	**0.25 – 1.5 (2.5) mm² ❶ | AWG 22 – 14** **550 V** **17 A** **Terminal block width 4.2 mm / 0.165 in** **9 – 11 mm / 0.39 in** * Ex

❶ can be connected: 0.25 mm² – 2.5 mm² "s + f-st";
can be pushed in directly: 0.5 mm² – 2.5 mm² "s" and 0.75 mm² – 1.5 mm² "Insulated ferrule, 12 mm"

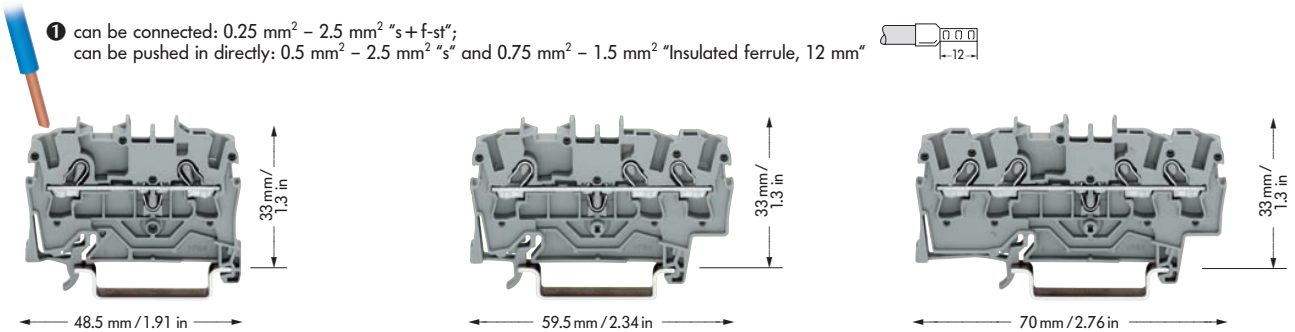

	Item No.	Pack.-unit pcs
2-conductor through terminal blocks		
grey	**2001-1201**	100
blue	**2001-1204** ❷	100
orange	**2001-1202**	100
more colors are being prepared		
2-conductor ground (earth) terminal block		
green-yellow	**2001-1207**	100
❷ Suitable for Ex i applications		

	Item No.	Pack.-unit pcs
3-conductor through terminal blocks		
grey	**2001-1301**	100
blue	**2001-1304** ❷	100
orange	**2001-1302**	100
more colors are being prepared		
3-conductor ground (earth) terminal block		
green-yellow	**2001-1307**	100
❷ Suitable for Ex i applications		

	Item No.	Pack.-unit pcs
4-conductor through terminal blocks		
grey	**2001-1401**	100
blue	**2001-1404** ❷	100
orange	**2001-1402**	100
more colors are being prepared		
4-conductor ground (earth) terminal block		
green-yellow	**2001-1407**	100
❷ Suitable for Ex i applications		

Accessories

Appropriate marking system **WMB/marker strips** (see page 3.35)

End and intermediate plate, 0.8 mm/0.031 in thick		
	orange	**2002-1292** 100 (4 x 25)
	grey	**2002-1291** 100 (4 x 25)
Insulation stop, 5 pcs/strip		200 strips
	light grey	**2001-171** 0.25-0.5 mm²
Push-in type jumper bars, light grey, insulated, I_N 16 A		
	2-way	**2001-402** 200 (8 x 25)
	3-way	**2001-403** 200 (8 x 25)
	4-way	**2001-404** 200 (8 x 25)
	5-way	**2001-405** 100 (4 x 25)
	:	:
	10-way	**2001-410** 100 (4 x 25)
Push-in type jumper bars, light grey, insulated, I_N 16 A		
	1 - 3	**2001-433** 200 (8 x 25)
	1 - 4	**2001-434** 200 (8 x 25)
	1 - 5	**2001-435** 100 (4 x 25)
	:	:
	1 - 10	**2001-440** 100 (4 x 25)
Modular TOPJOB®S connector,		
	for jumper contact slot	
	1-pole	**2001-501** 100 (4 x 25)
Spacer module		**2001-549** 100 (4 x 25)
Test plug adapter, for test plug 4 mm/0.157 in Ø		
		**2009-174** 100 (4 x 25)
	Testing tap, for max. 2.5 mm²	
		2009-182 100 (4 x 25)
Marker strips, white, plain, for central marking,		
	11 mm/0.433 in wide,	
	on roll	
	50 m	**2009-110** 1
	300 m	**2009-130** 1

End and intermediate plate, 0.8 mm/0.031 in thick		
	orange	**2002-1392** 100 (4 x 25)
	grey	**2002-1391** 100 (4 x 25)
Insulation stop, 5 pcs/strip		200 strips
	light grey	**2001-171** 0.25-0.5 mm²
Push-in type jumper bars, light grey, insulated, I_N 16 A		
	2-way	**2001-402** 200 (8 x 25)
	3-way	**2001-403** 200 (8 x 25)
	4-way	**2001-404** 200 (8 x 25)
	5-way	**2001-405** 100 (4 x 25)
	:	:
	10-way	**2001-410** 100 (4 x 25)
Push-in type jumper bars, light grey, insulated, I_N 16 A		
	1 - 3	**2001-433** 200 (8 x 25)
	1 - 4	**2001-434** 200 (8 x 25)
	1 - 5	**2001-435** 100 (4 x 25)
	:	:
	1 - 10	**2001-440** 100 (4 x 25)
Modular TOPJOB®S connector,		
	for jumper contact slot	
	1-pole	**2001-501** 100 (4 x 25)
Spacer module		**2001-549** 100 (4 x 25)
Test plug adapter, for test plug 4 mm/0.157 in Ø		
		**2009-174** 100 (4 x 25)
	Testing tap, for max. 2.5 mm²	
		2009-182 100 (4 x 25)
Marker strips, white, plain, for central marking,		
	11 mm/0.433 in wide,	
	on roll	
	50 m	**2009-110** 1
	300 m	**2009-130** 1

End and intermediate plate, 0.8 mm/0.031 in thick		
	orange	**2002-1492** 100 (4 x 25)
	grey	**2002-1491** 100 (4 x 25)
Insulation stop, 5 pcs/strip		200 strips
	light grey	**2001-171** 0.25-0.5 mm²
Push-in type jumper bars, light grey, insulated, I_N 16 A		
	2-way	**2001-402** 200 (8 x 25)
	3-way	**2001-403** 200 (8 x 25)
	4-way	**2001-404** 200 (8 x 25)
	5-way	**2001-405** 100 (4 x 25)
	:	:
	10-way	**2001-410** 100 (4 x 25)
Push-in type jumper bars, light grey, insulated, I_N 16 A		
	1 - 3	**2001-433** 200 (8 x 25)
	1 - 4	**2001-434** 200 (8 x 25)
	1 - 5	**2001-435** 100 (4 x 25)
	:	:
	1 - 10	**2001-440** 100 (4 x 25)
Modular TOPJOB®S connector,		
	for jumper contact slot	
	1-pole	**2001-501** 100 (4 x 25)
Spacer module		**2001-549** 100 (4 x 25)
Test plug adapter, for test plug 4 mm/0.157 in Ø		
		**2009-174** 100 (4 x 25)
	Testing tap, for max. 2.5 mm²	
		2009-182 100 (4 x 25)
Marker strips, white, plain, for central marking,		
	11 mm/0.433 in wide,	
	on roll	
	50 m	**2009-110** 1
	300 m	**2009-130** 1

* Notes on approvals see page 10.0 and following.

TOPJOB®S
Ex Terminal Blocks 2.5 (4) mm²/AWG 12, Series 2002

0.25 – 2.5 (4) mm²❶ | AWG 22 – 12 **550 V** **22 A** **Terminal block width 5.2 mm / 0.205 in** **10 – 12 mm / 0.43 in** * Ex	**0.25 – 2.5 (4) mm²❶ | AWG 22 – 12** **550 V** **22 A** **Terminal block width 5.2 mm / 0.205 in** **10 – 12 mm / 0.43 in** * Ex	**0.25 – 2.5 (4) mm²❶ | AWG 22 – 12** **550 V** **22 A** **Terminal block width 5.2 mm / 0.205 in** **10 – 12 mm / 0.43 in** * Ex

❶ can be connected: 0.25 mm² – 4 mm² "s + f-st";
can be pushed in directly: 0.75 mm² – 4 mm² "s" and 0.75 mm² – 2.5 mm² "Insulated ferrules, 12 mm"

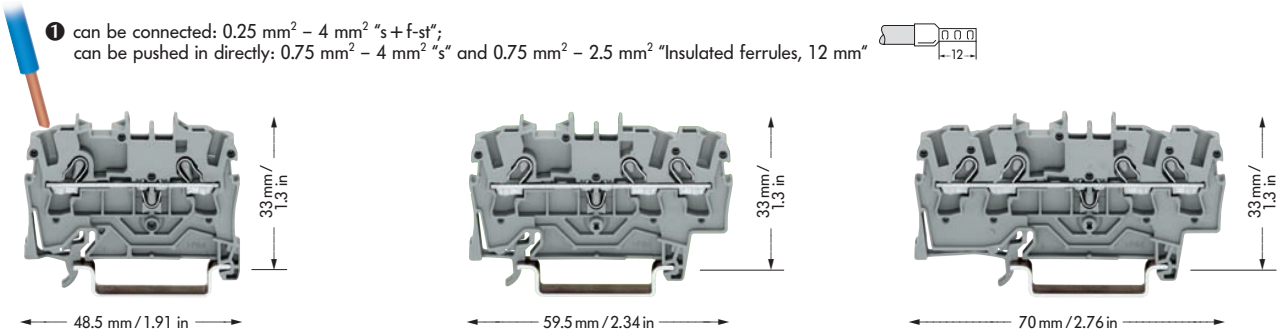

	Item No.	Pack.-unit pcs
2-conductor through terminal blocks		
grey	**2002-1201**	100
blue	**2002-1204** ②	100
orange	**2002-1202**	100
more colors are being prepared		
2-conductor ground (earth) terminal block		
green-yellow	**2002-1207**	100
② Suitable for Ex i applications		

	Item No.	Pack.-unit pcs
3-conductor through terminal blocks		
grey	**2002-1301**	100
blue	**2002-1304** ②	100
orange	**2002-1302**	100
more colors are being prepared		
3-conductor ground (earth) terminal block		
green-yellow	**2002-1307**	100
② Suitable for Ex i applications		

	Item No.	Pack.-unit pcs
4-conductor through terminal blocks		
grey	**2002-1401**	100
blue	**2002-1404** ②	100
orange	**2002-1402**	100
more colors are being prepared		
4-conductor ground (earth) terminal block		
green-yellow	**2002-1407**	100
② Suitable for Ex i applications		

Accessories

Appropriate marking system **WMB/marker strips/WMB Inline** (see page 3.35)

End and intermediate plate, 0.8 mm/0.031 in thick		
orange	**2002-1292**	100 (4 x 25)
grey	**2002-1291**	100 (4 x 25)
Insulation stop, 5 pcs/strip		200 strips
light grey	**2002-171**	0.25-0.5 mm²
dark gr.	**2002-172**	0.75-1 mm²
Push-in type jumper bars, light grey, insulated, I_N 20 A		
2-way	**2002-402**	200 (8 x 25)
3-way	**2002-403**	200 (8 x 25)
4-way	**2002-404**	200 (8 x 25)
5-way	**2002-405**	100 (4 x 25)
:	:	
10-way	**2002-410**	100 (4 x 25)
Push-in type jumper bars, light grey, insulated, I_N 20 A		
1 - 3	**2002-433**	200 (8 x 25)
1 - 4	**2002-434**	200 (8 x 25)
1 - 5	**2002-435**	100 (4 x 25)
:	:	
1 - 10	**2002-440**	100 (4 x 25)
Protective warning marker, with high voltage symbol, for 5 terminal blocks		
yellow	**2002-115**	100 (4 x 25)
Modular TOPJOB®S connector, for jumper contact slot		
1-pole	**2002-501**	100 (4 x 25)
Spacer module	**2002-549**	100 (4 x 25)
Test plug adapter, for test plug 4 mm/0.157 in Ø		
	2009-174	100 (4 x 25)
Testing tap, for max. 2.5 mm²		
	2009-182	100 (4 x 25)

End and intermediate plate, 0.8 mm/0.031 in thick		
orange	**2002-1392**	100 (4 x 25)
grey	**2002-1391**	100 (4 x 25)
Insulation stop, 5 pcs/strip		200 strips
light grey	**2002-171**	0.25-0.5 mm²
dark gr.	**2002-172**	0.75-1 mm²
Push-in type jumper bars, light grey, insulated, I_N 20 A		
2-way	**2002-402**	200 (8 x 25)
3-way	**2002-403**	200 (8 x 25)
4-way	**2002-404**	200 (8 x 25)
5-way	**2002-405**	100 (4 x 25)
:	:	
10-way	**2002-410**	100 (4 x 25)
Push-in type jumper bars, light grey, insulated, I_N 20 A		
1 - 3	**2002-433**	200 (8 x 25)
1 - 4	**2002-434**	200 (8 x 25)
1 - 5	**2002-435**	100 (4 x 25)
:	:	
1 - 10	**2002-440**	100 (4 x 25)
Protective warning marker, with high voltage symbol, for 5 terminal blocks		
yellow	**2002-115**	100 (4 x 25)
Modular TOPJOB®S connector, for jumper contact slot		
1-pole	**2002-501**	100 (4 x 25)
Spacer module	**2002-549**	100 (4 x 25)
Test plug adapter, for test plug 4 mm/0.157 in Ø		
	2009-174	100 (4 x 25)
Testing tap, for max. 2.5 mm²		
	2009-182	100 (4 x 25)

End and intermediate plate, 0.8 mm/0.031 in thick		
orange	**2002-1492**	100 (4 x 25)
grey	**2002-1491**	100 (4 x 25)
Insulation stop, 5 pcs/strip		200 strips
light grey	**2002-171**	0.25-0.5 mm²
dark gr.	**2002-172**	0.75-1 mm²
Push-in type jumper bars, light grey, insulated, I_N 20 A		
2-way	**2002-402**	200 (8 x 25)
3-way	**2002-403**	200 (8 x 25)
4-way	**2002-404**	200 (8 x 25)
5-way	**2002-405**	100 (4 x 25)
:	:	
10-way	**2002-410**	100 (4 x 25)
Push-in type jumper bars, light grey, insulated, I_N 20 A		
1 - 3	**2002-433**	200 (8 x 25)
1 - 4	**2002-434**	200 (8 x 25)
1 - 5	**2002-435**	100 (4 x 25)
:	:	
1 - 10	**2002-440**	100 (4 x 25)
Protective warning marker, with high voltage symbol, for 5 terminal blocks		
yellow	**2002-115**	100 (4 x 25)
Modular TOPJOB®S connector, for jumper contact slot		
1-pole	**2002-501**	100 (4 x 25)
Spacer module	**2002-549**	100 (4 x 25)
Test plug adapter, for test plug 4 mm/0.157 in Ø		
	2009-174	100 (4 x 25)
Testing tap, for max. 2.5 mm²		
	2009-182	100 (4 x 25)

* Notes on approvals see page 10.0 and following.

TOPJOB®S
Ex Terminal Blocks 4 (6) mm² /AWG 10, Series 2004

0.5 – 4 (6) mm² ❶ 550 V 30 A	AWG 20 – 10	Terminal block width 6.2 mm / 0.244 in	11 – 13 mm / 0.47 in	* Ex
0.5 – 4 (6) mm² ❶ 550 V 30 A	AWG 20 – 10	Terminal block width 6.2 mm / 0.244 in	11 – 13 mm / 0.47 in	* Ex
0.5 – 4 (6) mm² ❶ 550 V 30 A	AWG 20 – 10	Terminal block width 6.2 mm / 0.244 in	11 – 13 mm / 0.47 in	* Ex

❶ can be connected: 0.5 mm² – 6 mm² "s+f-st";
can be pushed in directly: 1 mm² – 6 mm² "s" and 0.75 mm² – 4 mm² "Insulated ferrule, 12 mm"

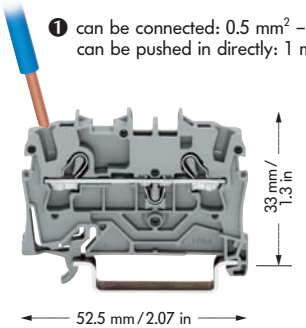

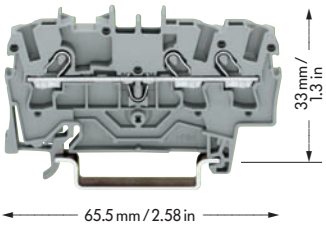

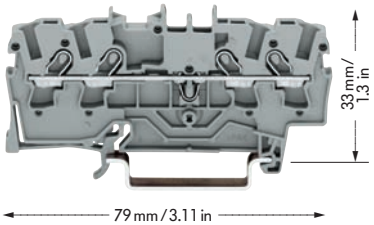

	Item No.	Pack.-unit pcs
2-conductor through terminal blocks		
grey	**2004-1201**	50
blue	**2004-1204** ❷	50
orange	**2004-1202**	50
more colors are being prepared		
2-conductor ground (earth) terminal block		
green-yellow	**2004-1207**	50
❷ Suitable for Ex i applications		

	Item No.	Pack.-unit pcs
3-conductor through terminal blocks		
grey	**2004-1301**	50
blue	**2004-1304** ❷	50
orange	**2004-1302**	50
more colors are being prepared		
3-conductor ground (earth) terminal block		
green-yellow	**2004-1307**	50
❷ Suitable for Ex i applications		

	Item No.	Pack.-unit pcs
4-conductor through terminal blocks		
grey	**2004-1401**	50
blue	**2004-1404** ❷	50
orange	**2004-1402**	50
more colors are being prepared		
4-conductor ground (earth) terminal block		
green-yellow	**2004-1407**	50
❷ Suitable for Ex i applications		

Accessories

Appropriate marking system **WMB/marker strips/WMB Inline** (see page 3.35)

End and intermediate plate, 1 mm/0.039 in thick		
orange	**2004-1292**	100 (4 x 25)
grey	**2004-1291**	100 (4 x 25)
Insulation stop, 5 pcs/strip		200 strips
light grey	**2004-171**	0.25-0.5 mm²
dark gr.	**2004-172**	0.75-1 mm²
Push-in type jumper bars, light grey, insulated, I_N 30 A		
2-way	**2004-402**	100 (4 x 25)
3-way	**2004-403**	100 (4 x 25)
4-way	**2004-404**	100 (4 x 25)
5-way	**2004-405**	50 (2 x 25)
:	:	
10-way	**2004-410**	50 (2 x 25)
Push-in type jumper bars, light grey, insulated, I_N 30 A		
1 - 3	**2004-433**	100 (4 x 25)
1 - 4	**2004-434**	100 (4 x 25)
1 - 5	**2004-435**	50 (2 x 25)
:	:	
1 - 10	**2004-440**	50 (2 x 25)
Protective warning marker, with high voltage symbol, for 5 terminal blocks		
yellow	**2004-115**	100 (4 x 25)
Modular TOPJOB®S connector, for jumper contact slot		
1-pole	**2004-501**	100 (4 x 25)
Spacer module	**2004-549**	100 (4 x 25)
Test plug adapter, for test plug 4 mm/0.157 in Ø		
	2009-174	100 (4 x 25)
Testing tap, for max. 2.5 mm²		
	2009-182	100 (4 x 25)

End and intermediate plate, 1 mm/0.039 in thick		
orange	**2004-1392**	100 (4 x 25)
grey	**2004-1391**	100 (4 x 25)
Insulation stop, 5 pcs/strip		200 strips
light grey	**2004-171**	0.25-0.5 mm²
dark gr.	**2004-172**	0.75-1 mm²
Push-in type jumper bars, light grey, insulated, I_N 30 A		
2-way	**2004-402**	100 (4 x 25)
3-way	**2004-403**	100 (4 x 25)
4-way	**2004-404**	100 (4 x 25)
5-way	**2004-405**	50 (2 x 25)
:	:	
10-way	**2004-410**	50 (2 x 25)
Push-in type jumper bars, light grey, insulated, I_N 30 A		
1 - 3	**2004-433**	100 (4 x 25)
1 - 4	**2004-434**	100 (4 x 25)
1 - 5	**2004-435**	50 (2 x 25)
:	:	
1 - 10	**2004-440**	50 (2 x 25)
Protective warning marker, with high voltage symbol, for 5 terminal blocks		
yellow	**2004-115**	100 (4 x 25)
Modular TOPJOB®S connector, for jumper contact slot		
1-pole	**2004-501**	100 (4 x 25)
Spacer module	**2004-549**	100 (4 x 25)
Test plug adapter, for test plug 4 mm/0.157 in Ø		
	2009-174	100 (4 x 25)
Testing tap, for max. 2.5 mm²		
	2009-182	100 (4 x 25)

End and intermediate plate, 1 mm/0.039 in thick		
orange	**2004-1492**	100 (4 x 25)
grey	**2004-1491**	100 (4 x 25)
Insulation stop, 5 pcs/strip		200 strips
light grey	**2004-171**	0.25-0.5 mm²
dark gr.	**2004-172**	0.75-1 mm²
Push-in type jumper bars, light grey, insulated, I_N 30 A		
2-way	**2004-402**	100 (4 x 25)
3-way	**2004-403**	100 (4 x 25)
4-way	**2004-404**	100 (4 x 25)
5-way	**2004-405**	50 (2 x 25)
:	:	
10-way	**2004-410**	50 (2 x 25)
Push-in type jumper bars, light grey, insulated, I_N 30 A		
1 - 3	**2004-433**	100 (4 x 25)
1 - 4	**2004-434**	100 (4 x 25)
1 - 5	**2004-435**	50 (2 x 25)
:	:	
1 - 10	**2004-440**	50 (2 x 25)
Protective warning marker, with high voltage symbol, for 5 terminal blocks		
yellow	**2004-115**	100 (4 x 25)
Modular TOPJOB®S connector, for jumper contact slot		
1-pole	**2004-501**	100 (4 x 25)
Spacer module	**2004-549**	100 (4 x 25)
Test plug adapter, for test plug 4 mm/0.157 in Ø		
	2009-174	100 (4 x 25)
Testing tap, for max. 2.5 mm²		
	2009-182	100 (4 x 25)

* Notes on approvals see page 10.0 and following.

TOPJOB®S
Ⓔx Terminal Blocks 6 (10) mm² /AWG 8, Serie 2006

0.5 – 6 (10) mm² ❶ 550 V 38 A	AWG 20 – 8	0.5 – 6 (10) mm² ❶ 550 V 36 A	AWG 20 – 8	Step-down jumpers
Terminal block width 7.5 mm / 0.295 in 13 – 15 mm / 0.55 in * Ⓔx		Terminal block width 7.5 mm / 0.295 in 13 – 15 mm / 0.55 in * Ⓔx		

❶ can be connected: 0.5 mm² – 10 mm² "s + f-st";
can be pushed in directly: 1.5 mm² – 10 mm² "s" and
1.5 mm² – 6 mm² "Insulated ferrule, 12 mm"

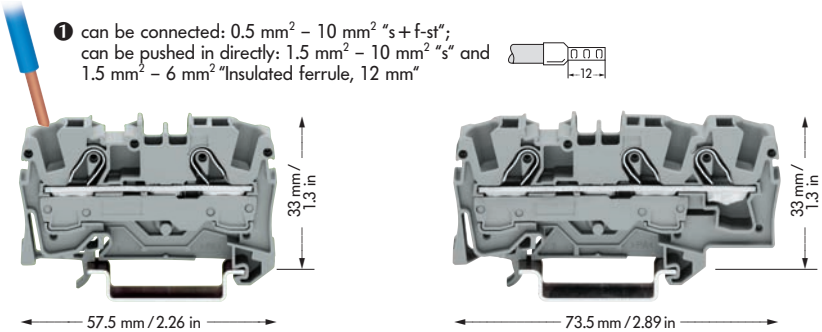

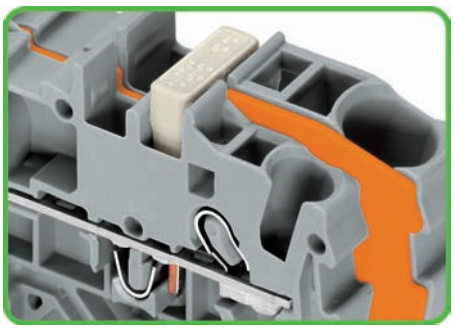

	Item No.	Pack.-unit pcs
2-conductor through terminal blocks		
grey	**2006-1201**	50
blue	**2006-1204** ②	50
orange	**2006-1202**	50
2-conductor ground (earth) terminal block		
green-yellow	**2006-1207**	50
② Suitable for Ex i applications		

	Item No.	Pack.-unit pcs
3-conductor through terminal blocks		
grey	**2006-1301**	25
blue	**2006-1304** ②	25
orange	**2006-1302**	25
3-conductor ground (earth) terminal block		
green-yellow	**2006-1307**	25
② Suitable for Ex i applications		

Item No.	Pack.-unit pcs
Commoning with step-down jumpers	
An end plate must always be used between the terminal blocks that are commoned with step-down jumpers.	
Step-down jumper 2006-499 is suitable for commoning AWG 10/12 (6/4 mm²) terminal blocks with AWG 12/14/16 (4/2.5/1.5 mm²) terminal blocks.	
Step-down jumpers are simply pushed down to full insertion, in the same way as all other push-in type jumper bars.	

Accessories

Appropriate marking system **WMB/marker strips/WMB Inline** (see page 3.35)

End and intermediate plate, 1 mm/0.039 in thick



orange	**2006-1292**	100 (4 x 25)
grey	**2006-1291**	100 (4 x 25)

End and intermediate plate, 1 mm/0.039 in thick



orange	**2006-1392**	100 (4 x 25)
grey	**2006-1391**	100 (4 x 25)

Step-down jumper, light grey, insulated, 32 A



2006-499		50 (2 x 25)

Push-in type jumper bars, light grey, insulated, I_N 33 A



2-way	**2006-402**	50 (2 x 25)
3-way	**2006-403**	50 (2 x 25)
4-way	**2006-404**	50 (2 x 25)
5-way	**2006-405**	50 (2 x 25)

Push-in type jumper bars, light grey, insulated, I_N 33 A



2-way	**2006-402**	50 (2 x 25)
3-way	**2006-403**	50 (2 x 25)
4-way	**2006-404**	50 (2 x 25)
5-way	**2006-405**	50 (2 x 25)

Push-in type jumper bars, light grey, insulated, I_N 33 A



1 - 3	**2006-433**	50 (2 x 25)
1 - 4	**2006-434**	50 (2 x 25)
1 - 5	**2006-435**	50 (2 x 25)

Push-in type jumper bars, light grey, insulated, I_N 33 A



1 - 3	**2006-433**	50 (2 x 25)
1 - 4	**2006-434**	50 (2 x 25)
1 - 5	**2006-435**	50 (2 x 25)

Protective warning marker, with high voltage symbol, for 5 terminal blocks



yellow	**2006-115**	100 (4 x 25)

Protective warning marker, with high voltage symbol, for 5 terminal blocks



yellow	**2006-115**	100 (4 x 25)

Test plug adapter, for test plug 4 mm/0.157 in Ø



	2009-174	100 (4 x 25)

Test plug adapter, for test plug 4 mm/0.157 in Ø



	2009-174	100 (4 x 25)

Testing tap, for max. 2.5 mm²

	2009-182	100 (4 x 25)

Testing tap, for max. 2.5 mm²

	2009-182	100 (4 x 25)

Marker strips, white, plain, for central marking, 11 mm/0.433 in wide, on roll

50 m	**2009-110**	1
300 m	**2009-130**	1

Marker strips, white, plain, for central marking, 11 mm/0.433 in wide, on roll

50 m	**2009-110**	1
300 m	**2009-130**	1

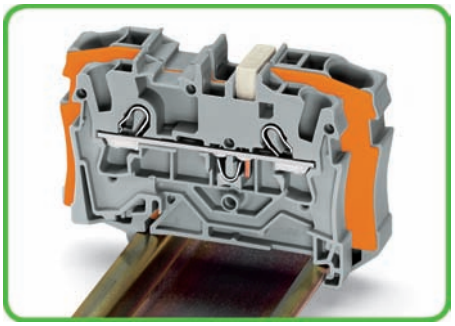

Note:

The total current flowing must not exceed the rating of the step-down jumper.

*Notes on approvals see page 10.0 and following.

TOPJOB®S
Ⓔx Terminal Blocks 10 (16) mm² /AWG 6, Series 2010

0.5 – 10 (16) mm²❶ 550 V 51 A | AWG 20 – 6	0.5 – 10 (16) mm²❶ 550 V 50 A | AWG 20 – 6	Step-down jumpers
Terminal block width 10 mm / 0.394 in 17 – 19 mm / 0.71 in * Ⓔx	Terminal block width 10 mm / 0.394 in 17 – 19 mm / 0.71 in * Ⓔx	

❶ can be connected: 0.5 mm² – 16 mm² "s+f-st";
can be pushed in directly: 2.5 mm² – 16 mm² "s" and
2.5 mm² – 10 mm² "Insulated ferrule, 18 mm"

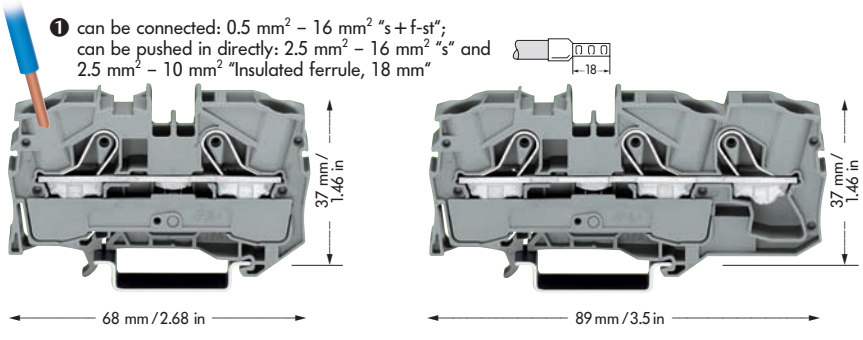

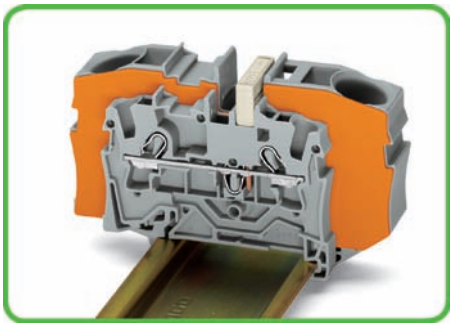

	Item No.	Pack.-unit pcs
2-conductor through terminal blocks		
grey	**2010-1201**	25
blue	**2010-1204** ②	25
orange	**2010-1202**	25
2-conductor ground (earth) terminal block		
green-yellow	**2010-1207**	25
② Suitable for Ex i applications		

	Item No.	Pack.-unit pcs
3-conductor through terminal blocks		
grey	**2010-1301**	25
blue	**2010-1304** ②	25
orange	**2010-1302**	25
3-conductor ground (earth) terminal block		
green-yellow	**2010-1307**	25
② Suitable for Ex i applications		

	Item No.	Pack.-unit pcs
Commoning with step-down jumpers		
An end plate must always be used between the terminal blocks that are commoned with step-down jumpers.		
Step-down jumper 2006-499 is suitable for commoning AWG 10/12 (6/4 mm²) terminal blocks with AWG 12/14/16 (4/2.5/1.5 mm²) terminal blocks.		
Step-down jumpers are simply pushed down to full insertion, in the same way as all other push-in type jumper bars.		

Accessories

Appropriate marking system **WMB/marker strips/WMB Inline** (see page 3.35)

	Item No.	Pack.-unit pcs
End and intermediate plate, 1 mm/0.039 in thick		
orange	**2010-1292**	100 (4 x 25)
grey	**2010-1291**	100 (4 x 25)
Push-in type jumper bars, light grey, insulated, I_N 51 A		
2-way	**2010-402**	50 (2 x 25)
3-way	**2010-403**	50 (2 x 25)
4-way	**2010-404**	50 (2 x 25)
5-way	**2010-405**	50 (2 x 25)
Push-in type jumper bars, light grey, insulated, I_N 51 A		
1 - 3	**2010-433**	50 (2 x 25)
1 - 4	**2010-434**	50 (2 x 25)
1 - 5	**2010-435**	50 (2 x 25)
Protective warning marker, with high voltage symbol, for 5 terminal blocks		
yellow	**2010-115**	50 (2 x 25)
Test plug adapter, for test plug 4 mm/0.157 in Ø	**2009-174**	100 (4 x 25)
Testing tap, for max. 2.5 mm²	**2009-182**	100 (4 x 25)
Marker strips, white, plain, for central marking, 11 mm/0.433 in wide, on roll		
50 m	**2009-110**	1
300 m	**2009-130**	1

	Item No.	Pack.-unit pcs
End and intermediate plate, 1 mm/0.039 in thick		
orange	**2010-1392**	100 (4 x 25)
grey	**2010-1391**	100 (4 x 25)
Push-in type jumper bars, light grey, insulated, I_N 50 A		
2-way	**2010-402**	50 (2 x 25)
3-way	**2010-403**	50 (2 x 25)
4-way	**2010-404**	50 (2 x 25)
5-way	**2010-405**	50 (2 x 25)
Push-in type jumper bars, light grey, insulated, I_N 50 A		
1 - 3	**2010-433**	50 (2 x 25)
1 - 4	**2010-434**	50 (2 x 25)
1 - 5	**2010-435**	50 (2 x 25)
Protective warning marker, with high voltage symbol, for 5 terminal blocks		
yellow	**2010-115**	50 (2 x 25)
Test plug adapter, for test plug 4 mm/0.157 in Ø	**2009-174**	100 (4 x 25)
Testing tap, for max. 2.5 mm²	**2009-182**	100 (4 x 25)
Marker strips, white, plain, for central marking, 11 mm/0.433 in wide, on roll		
50 m	**2009-110**	1
300 m	**2009-130**	1

	Item No.	Pack.-unit pcs
Step-down jumper, light grey, insulated, 57 A	**2016-499**	50 (2 x 25)

*Notes on approvals see page 10.0 and following.

TOPJOB®S
Ex Terminal Blocks 16 (25 "f-st") mm²/AWG 4, Series 2016

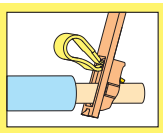

0.5 – 16 (25 "f-st") mm² ❶ | AWG 20 – 4 550 V 70 A Terminal block width 12 mm / 0.472 in 18 – 20 mm / 0.75 in * Ex	0.5 – 16 (25 "f-st") mm² ❶ | AWG 20 – 4 550 V 67 A Terminal block width 12 mm / 0.472 in 18 – 20 mm / 0.75 in * Ex	Step-down jumpers

❶ can be connected: 0.5 mm² – 16 mm² "s + f-st", 25 mm² "f-st";
can be pushed in directly: 2.5 mm² – 16 mm² "s"
and 2.5 mm² – 16 mm² "Insulated ferrule, 18 mm"

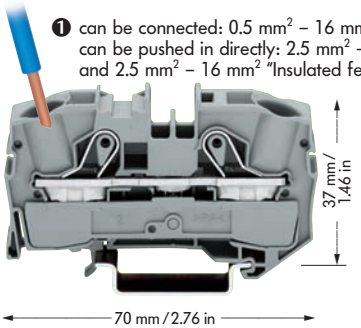

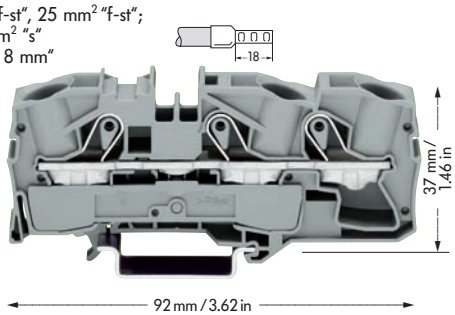

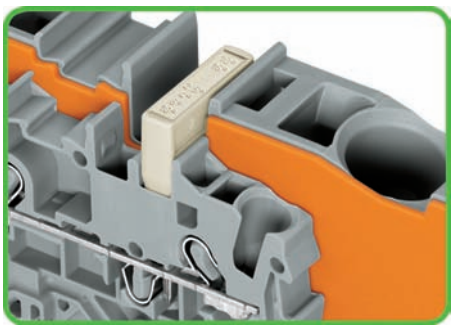

	Item No.	Pack.-unit pcs
2-conductor through terminal blocks		
grey	**2016-1201**	20
blue	**2016-1204** ②	20
orange	**2016-1202**	20
2-conductor ground (earth) terminal block		
green-yellow	**2016-1207**	20
② Suitable for Ex i applications		

	Item No.	Pack.-unit pcs
3-conductor through terminal blocks		
grey	**2016-1301**	20
blue	**2016-1304** ②	20
orange	**2016-1302**	20
3-conductor ground (earth) terminal block		
green-yellow	**2016-1307**	20
② Suitable for Ex i applications		

Commoning with step-down jumpers

An end plate must always be used between the terminal blocks that are commoned with step-down jumpers.
Step-down jumper 2006-499 is suitable for commoning AWG 10/12 (6/4 mm²) terminal blocks with AWG 12/14/16 (4/2.5/1.5 mm²) terminal blocks.

Step-down jumpers are simply pushed down to full insertion, in the same way as all other push-in type jumper bars.

Accessories

Appropriate marking system **WMB/marker strips/WMB Inline** (see page 3.35)

End and intermediate plate, 1 mm/0.039 in thick



orange	**2016-1292**	100 (4 x 25)
grey	**2016-1291**	100 (4 x 25)

End and intermediate plate, 1 mm/0.039 in thick



orange	**2016-1392**	100 (4 x 25)
grey	**2016-1391**	100 (4 x 25)

Step-down jumper, light grey, insulated, 57 A



2016-499	50 (2 x 25)

Push-in type jumper bars, light grey, insulated, I_N 65 A



2-way	**2016-402**	50 (2 x 25)
3-way	**2016-403**	50 (2 x 25)
4-way	**2016-404**	50 (2 x 25)
5-way	**2016-405**	50 (2 x 25)

Push-in type jumper bars, light grey, insulated, I_N 65 A



2-way	**2016-402**	50 (2 x 25)
3-way	**2016-403**	50 (2 x 25)
4-way	**2016-404**	50 (2 x 25)
5-way	**2016-405**	50 (2 x 25)

Push-in type jumper bars, light grey, insulated, I_N 65 A



1 - 3	**2016-433**	50 (2 x 25)
1 - 4	**2016-434**	50 (2 x 25)
1 - 5	**2016-435**	50 (2 x 25)

Push-in type jumper bars, light grey, insulated, I_N 65 A



1 - 3	**2016-433**	50 (2 x 25)
1 - 4	**2016-434**	50 (2 x 25)
1 - 5	**2016-435**	50 (2 x 25)

Protective warning marker, with high voltage symbol, for 5 terminal blocks



yellow	**2016-115**	50 (2 x 25)

Protective warning marker, with high voltage symbol, for 5 terminal blocks



yellow	**2016-115**	50 (2 x 25)

Test plug adapter, for test plug 4 mm/0.157 in Ø



2009-174	100 (4 x 25)

Test plug adapter, for test plug 4 mm/0.157 in Ø



2009-174	100 (4 x 25)

Testing tap, for max. 2.5 mm²

2009-182	100 (4 x 25)

Testing tap, for max. 2.5 mm²

2009-182	100 (4 x 25)

Marker strips, white, plain, for central marking, 11 mm/0.433 in wide, on roll

50 m	**2009-110**	1
300 m	**2009-130**	1

Marker strips, white, plain, for central marking, 11 mm/0.433 in wide, on roll

50 m	**2009-110**	1
300 m	**2009-130**	1

Note:

The total current flowing must not exceed the rating of the step-down jumper.

*Notes on approvals see page 10.0 and following.

TOPJOB®S
Ex Double Deck Terminal Blocks 2.5 (4) mm² /AWG 12, Series 2002

0.25 – 2.5 (4) mm² ❶ ❷	AWG 22 – 12	0.25 – 2.5 (4) mm² ❶ ❷	AWG 22 – 12
Terminal block width 5.2 mm / 0.205 in		**Terminal block width 5.2 mm / 0.205 in**	
10 – 12 mm / 0.43 in		**10 – 12 mm / 0.43 in**	

❶ can be connected: 0.25 mm² – 4 mm² "s + f-st";
can be pushed in directly: 0.75 mm² – 4 mm² "s" and
0.75 mm² – 2.5 mm² "Insulated ferrule, 12 mm"

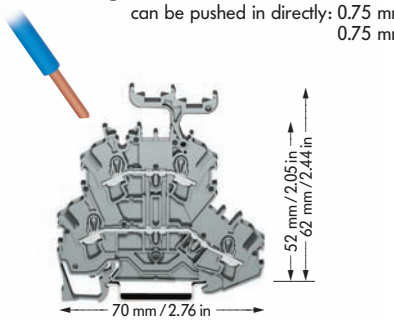

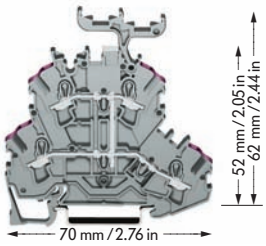

	Item No.	Item No.	Pack.-unit pcs
Double deck terminal blocks, for DIN 35 rail			
Through-/through terminal blocks,			
housing color grey			
Marking carrier with		without	
L/L	**2002-2231**	**2002-2201**	50
N/L	**2002-2232**	**2002-2202**	50
L/N	**2002-2233**	**2002-2203**	50
Housing color blue			
N/N	**2002-2234** ❷	**2002-2204** ❷	50
❷ Suitable for Ex i applications			

	Item No.	Item No.	Pack.-unit pcs
Double deck terminal blocks, for DIN 35 rail			
4-conductor through terminal block,			
internal commoning, housing color grey,			
conductor entry position colored in violet			
Marking carrier with		without	
L	**2002-2238**	**2002-2208**	50
4-conductor through terminal block,			
internal commoning, housing color blue,			
conductor entry position colored in violet			
N	**2002-2239** ❷	**2002-2209** ❷	50
❷ Suitable for Ex i applications			

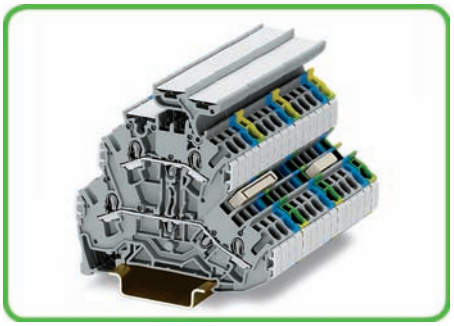

❶ can be connected: 0.25 mm² – 4 mm² "s + f-st";
can be pushed in directly: 0.75 mm² – 4 mm² "s" and
0.75 mm² – 2.5 mm² "Insulated ferrule, 12 mm"

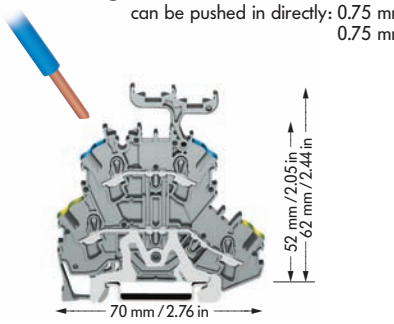

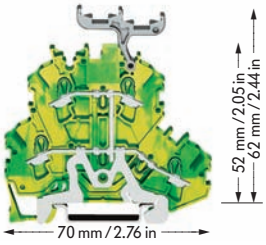

	Item No.	Item No.	Pack.-unit pcs
Double deck terminal blocks, for DIN 35 rail			
Ground (earth) conductor/through terminal block,			
Housing color grey			
Marking carrier with		without	
PE/N	**2002-2247**	**2002-2217**	50
PE/L	**2002-2257**	**2002-2227**	50

	Item No.	Item No.	Pack.-unit pcs
Double deck terminal blocks, for DIN 35 rail			
4-conductor ground (earth) terminal block,			
internal commoning			
Housing color green-yellow			
Marking carrier with		without	
PE	**2002-2237**	**2002-2207**	50

	Item No.	Item No.	Pack.-unit pcs

Accessories

Appropriate marking system **WMB/marker strips/WMB Inline** (see page 3.35)

End and intermediate plate, 0.8 mm/0.032 in thick			
orange	**2002-2292**	100 (4 x 25)	
grey	**2002-2291**	100 (4 x 25)	

Two-way marking adapter,		
2002-121	50 (4 x 25)	

Protective warning marker, with high voltage symbol, for 5 terminal blocks		
yellow	**2002-115**	100 (4 x 25)

Push-in type jumper bars, light grey, insulated, I_N ❷		
2-way	**2002-402**	200 (8 x 25)
3-way	**2002-403**	200 (8 x 25)
4-way	**2002-404**	200 (8 x 25)
5-way	**2002-405**	100 (4 x 25)
:	:	
10-way	**2002-410**	100 (4 x 25)

Push-in type jumper bars, light grey, insulated, I_N ❷		
1 - 3	**2002-433**	200 (8 x 25)
1 - 4	**2002-434**	200 (8 x 25)
1 - 5	**2002-435**	100 (4 x 25)
:	:	
1 - 10	**2002-440**	100 (4 x 25)

Marker strips, white, plain, for central marking, 11 mm/0.433 in wide, on roll		
50 m	**2009-110**	1
300 m	**2009-130**	1

❷ Technical data in preparation

TOPJOB®S
Ex Triple Deck Terminal Blocks 2.5 (4) mm² /AWG 12, Series 2002

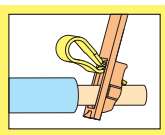

0.25 – 2.5 (4) mm²❶❷ | AWG 22 – 12

Terminal block width 5.2 mm / 0.205 in
10 – 12 mm / 0.43 in

❶ can be connected: 0.25 mm² – 4 mm² "s+f-st";
can be pushed in directly: 0.75 mm² – 4 mm² "s" and 0.75 mm² – 2.5 mm² "Insulated ferrule, 12 mm"

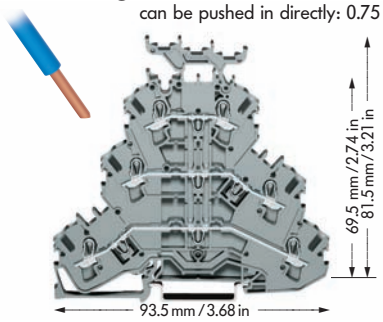

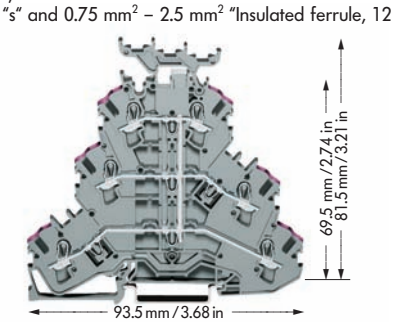

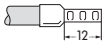

	Item No.	Item No.	Pack.-unit pcs
Triple deck terminal blocks, for DIN 35 rail			
Through-/through-/through terminal blocks,			
housing color grey			
	Marking carrier with	without	
L/L/L	**2002-3231**	**2002-3201**	50
L/L/N	**2002-3233**	**2002-3203**	50
Housing color blue			
N/N/N	**2002-3234**❷	**2002-3204**❷	50
❷ Suitable for Ex i applications			

	Item No.	Item No.	Pack.-unit pcs
Triple deck terminal block, for DIN 35 rail			
6-conductor through terminal block,			
internal commoning, housing color grey,			
conductor entry position colored in violet			
	Marking carrier with	without	
L	**2002-3238**	**2002-3208**	50
6-conductor through terminal block,			
internal commoning, housing color blue,			
conductor entry position colored in violet			
N	**2002-3239**❷	**2002-3209**❷	50
❷ Suitable for Ex i applications			



❶ can be connected: 0.25 mm² – 4 mm² "s+f-st";
can be pushed in directly: 0.75 mm² – 4 mm² "s" and 0.75 mm² – 2.5 mm² "Insulated ferrule, 12 mm"

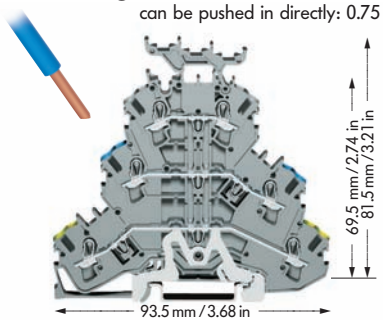

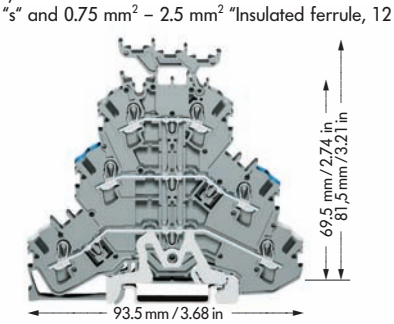

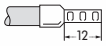

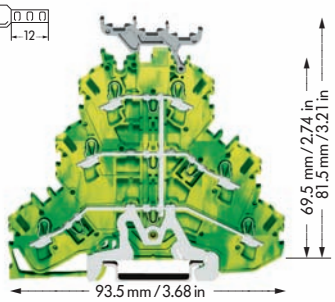

	Item No.	Item No.	Pack.-unit pcs
Triple deck terminal blocks, for DIN 35 rail			
Ground (earth)/through/through terminal blocks,			
housing color grey			
	Marking carrier with	without	
PE/N/L	**2002-3247**	**2002-3217**	50
PE/L/L	**2002-3257**	**2002-3227**	50

	Item No.	Item No.	Pack.-unit pcs
Triple deck terminal block, for DIN 35 rail			
Shield (screen)/through/through terminal blocks,			
housing color grey			
	Marking carrier with	without	
Schirm/N/L	**2002-3248**	**2002-3218**	50
Schirm/L/L	**2002-3258**	**2002-3228**	50

	Item No.	Item No.	Pack.-unit pcs
Triple deck terminal block, for DIN 35 rail			
6-conductor ground (earth) terminal block,			
internal commoning			
housing color green-yellow			
	Marking carrier with	without	
PE	**2002-3237**	**2002-3207**	50

Accessories

Appropriate marking system **WMB/marker strips/WMB Inline** (see page 3.35)

End and intermediate plate, 0.8 mm/0.032 in thick



orange	**2002-3292**	100 (4 x 25)
grey	**2002-3291**	100 (4 x 25)

Two-way marking adapter,



2002-131	50 (2 x 25)

Protective warning marker, with high voltage symbol, for 5 terminal blocks



yellow	**2002-115**	100 (4 x 25)

Push-in type jumper bars, light grey, insulated, I_N ❷



2-way	**2002-402**	200 (8 x 25)
3-way	**2002-403**	200 (8 x 25)
4-way	**2002-404**	200 (8 x 25)
5-way	**2002-405**	100 (4 x 25)
:	:	
10-way	**2002-410**	100 (4 x 25)

Push-in type jumper bars, light grey, insulated, I_N ❷



1 - 3	**2002-433**	200 (8 x 25)
1 - 4	**2002-434**	200 (8 x 25)
1 - 5	**2002-435**	100 (4 x 25)
:	:	
1 - 10	**2002-440**	100 (4 x 25)

Marker strips, white, plain, for central marking, 11 mm/0.433 in wide, on roll

50 m	**2009-110**	1
300 m	**2009-130**	1

❷ Technical data in preparation